FABA

Catalogue

Woodworking tools



Woodworking without secrets

Edition 1/2024

About us



FABA worldwide.



FABA - 4 ha of area, 4 production halls, 380 employees.

FABA is the biggest producer and supplier of professional woodworking tools for furniture and sawmill industry in Poland. **FABA** is a company with years-long tradition dating back to 1947. **FABA** has exported their tools for many years and became a well-recognizable brand thanks to high quality of tools. Nowadays, **FABA** logo is known in over 40 countries.

FABA is a producer of professional, technologically advanced tools for wood and wood-based materials for furniture and sawmill industry. The whole production plant has an area of 4 hectares with 4 production halls equipped with the state-of-the-art machine park operated by experienced staff of designers and engineers. **FABA** company specializes in professional tools where "professional" means not only a properly manufactured tool but also carefully selected for the type of machined material, parameters of work, type of machining and client's expectations.

FABA as one of few world suppliers offers such a wide range of professional woodworking tools. Saw blades, brazed cutters, cutter heads, shank cutters, tools with hydro or Power-Lock, HSK, ISO30 clamping, jointing tools, sets for window and door production, knives and wide range of DIA tools are produced in one place. A great advantage of **FABA** is very short production time of special tools.



1. SAW BLADES

2. HOGGER UNITS

3. BRAZED CUTTERS

4. TOOLS FOR JOINTS

5. CUTTER HEADS

6. SHANK TOOLS

7. DRILLS

8. KNIVES, SPARE PARTS

9. CLAMPING SYSTEMS

10. WINDOWS AND DOORS

11. DIA TOOLS



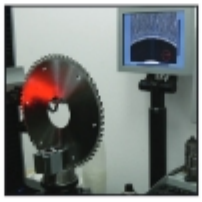

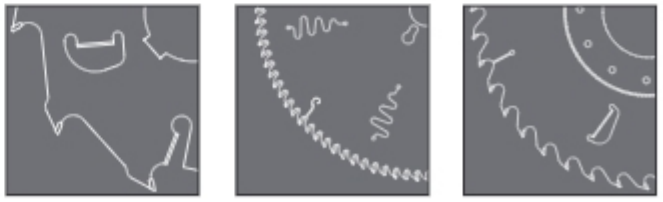

1. Saw blades

Saw blades

Saw blades with brazed carbide (HM) tips designed for professional machining of solid soft, hard and glued wood, other wood-based materials, plastics and aluminum alloys. Saw blades are used for longitudinal, cross and angular cutting, formatting and grooving. They have been designed for specialist machines to guarantee optimal efficiency with requested cutting quality.

The tools are designed and manufactured with properly chosen blade geometry, with or without shear angle and optional chip flow. Wide range of teeth types allows to optimize machining efficiency. Additionally, saw blades for multi-blade machines are equipped with wiper knives which guarantee smooth surface, eliminate chip blocking and minimize material burning.

Saw blade bodies are produced from the highest quality steel in a special shaping technology, properly selected for the machining process and material as well as type of work, parameters and conditions prevailing during the machining, in order to guarantee proper and stable work of the tool both in standard and extreme conditions. Various blade types have various carbide types characterized with proper hardness, resilience, abrasion resistance and intergranular corrosion. It allows for precise choice of proper carbide for the type of material and machining.

All types of saw blades are manufactured on modern CNC machines of world-renowned producers, which guarantee high accuracy and precision of the produced tools. Very strict interoperational and final control does not accept any tools which do not meet high tolerance and production standards. The construction and production remains in accordance with all points of safety standard EN/PN-847-1 concerning tools for mechanical woodworking.

The *Saw blades* chapter includes only example types of drills with their basic dimensions. On special request, we can (after obtaining proper information) suggest, design and produce any type saw blade for the required type of machining, material, parameters and conditions of work. Offered saw blades diameters range between D=80 and D=800 mm. Time of production usually doesn't exceed 10 working days.

Orders should include:

- outer diameter (D) or diameters range,
- bore diameter (d) and number of key ways or driver holes,
- number of teeth (z) or spindle rotation speed and feed speed,
- cutting depth (H),
- type of machined material,
- flange diameter.



Contents

1. SAW BLADES

Pictograms 1.4

Tooth configuration 1.5

Construction 1.6

Flange 1.6

Cutting speed 1.7

1.1 Saw blades for cutting solid wood

1.1.1 Saw blades for longitudinal cutting 1.8

1.1.2 Saw blades for cross-cutting 1.20

1.2 Universal saw blades 1.22

1.3 Panel sizing / scoring saw blades 1.29

1.4 Saw blades for cutting aluminum, plastics/metals 1.38

1.5 Construction saw blades 1.41

1.6 Grooving saw blades 1.42

1.7 Special saw blades 1.47

Pictograms


solid dry softwood


solid dry hardwood


solid wet softwood


solid wet hardwood


solid frozen wood


coniferous wood


deciduous wood


chipboard


plywood


laminated board


glued wood



LDF board



MDF board



HDF board



light alloys



plastics



drywall



construction board


sandwich panels


profiles


flat surface


longitudinal cut


cross cut


cross and longitudinal cut


angular cut


cutting in stack


cutting with scoring saw blade


scoring saw blade


saw blade for grooves


single cut


multi-rip saw blade


mechanical feed


manual feed


saw blade with noise reduction


saw blade without noise reduction



carbide



stellite

- product available on stock
+ approximate production time 9 days

Tooth configuration

GM



flat

GAM



flat with chamfers on both sides

GS

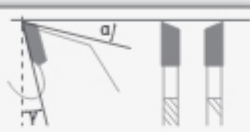

alternate top bevel

GSM

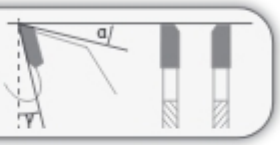

top bevel

GŁ/GD

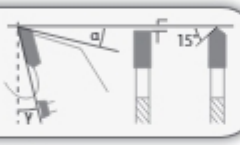

hollow / inverted-v + flat

GT

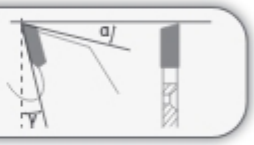

top bevel, right

GA

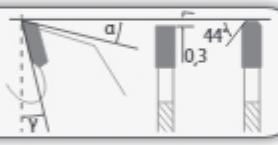

triple-chip + flat

GW

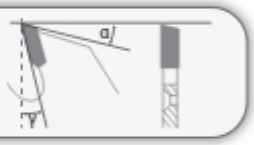

top bevel, left

GA/GA

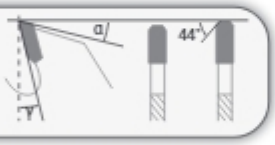

triple-chip

GD

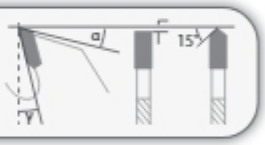

inverted-v + flat

GM-B

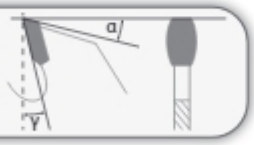

barrel-flat

GF/GS

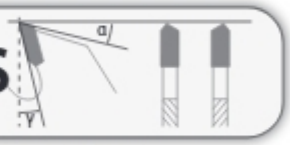

alternate top bevel with chamfer

GR/GM



conical-flat

GD/GA

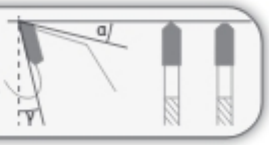

inverted-v + triple-chip

GR/GS

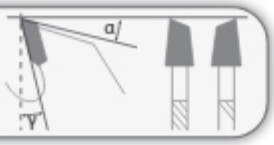

conical-alternate bevel

GV

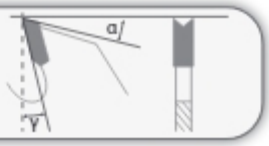

V-top

Construction

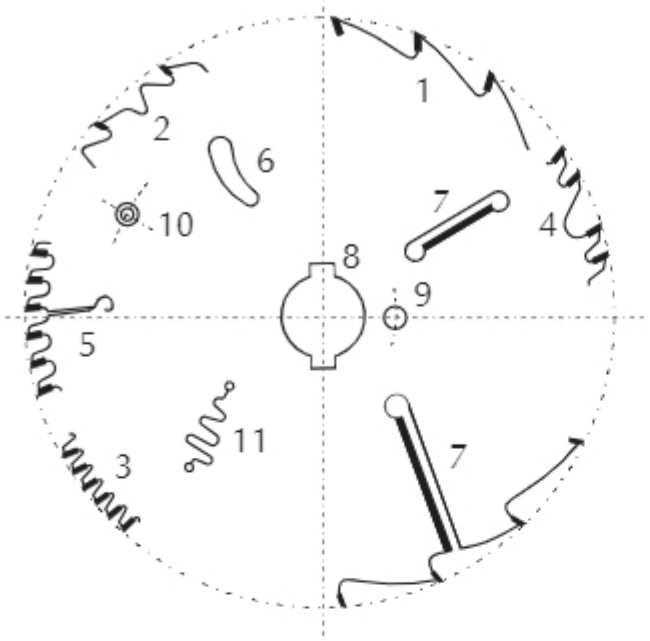

1. Toothing with positive hook angle.
2. Toothing with positive hook angle and feed limiter.
3. Toothing with negative hook angle.
4. Toothing with irregular pitch.
5. Laser compensation slot.
6. Cooling hole (removing heat).
7. Carbide wiper knife.
8. Keyway.
9. Driver hole.
10. Fixing holes.
11. Laser noise-reduction cuts.

Flange

Recommended flange diameters for respective dimensions of saw blades and scorers.

Outer diameter (mm)	Central bore diameter (mm)	Flange diameter minimum (mm)	Flange diameter maximum (mm)
100	20	50	50
125	20	50	50
125	30	60	60
150	30	80	80
180	30	80	90
200	30	90	100
250	30	90	110
300	30	100	120
350	30	110	130
400	30	120	140
450	30	120	150
500	30	130	160
550	30	140	170
600	30	150	180
650	30	160	200
700	30	180	220

Recommended flange diameters for respective dimensions of multi-rip saw blades.

Outer diameter (mm)	Central bore diameter (mm)	Flange diameter minimum (mm)	Flange diameter maximum (mm)
225	40	80	80
225	60	90	120
250	40	90	110
250	60	100	120
250	80	100	120
300	60	100	120
300	80	100	120
300	90	110	130
350	60	100	120
350	80	110	130
350	90	120	140
400	60	110	130
400	80	120	150
400	100	130	160
450	80	120	150
450	100	130	160
500	70	120	150
500	100	130	160
500	150	190	220

Cutting speed

Cutting speed depending on the kind of machined material.

Workpiece material	Cutting speed (m/s)
Soft wood	60÷100
Wet soft wood	70÷100
Hard wood	50÷90
Chipboard	60÷80
MDF	60÷80
Hardboard	50÷80
Softboard	60÷100
Plywood	50÷80
Light alloys	40÷60
Plastics	50÷80

Basic formula for determining cutting speed Vc

$$Vc = \frac{\pi \times D \times n}{60.000} \text{ (m/s)}$$

D - tool diameter (mm)
n - spindle speed (r.p.m.)

Determining rotational speed of saw blades and scorers for given cutting speed and tool diameter.

D mm \ n min⁻¹	2.000	2.500	4.500	5.600	8.000	10.000	13.000
Ø 100	11	15	24	29	42	52	68
Ø 125	13	18	29	37	52	65	85
Ø 150	16	22	35	44	63	78	102
Ø 200	21	29	47	59	84	104	
Ø 250	26	37	59	73	104		
Ø 300	32	44	71	88	125		
Ø 315	33	46	74	92			
Ø 350	37	51	82	102			
Ø 400	42	58	94	117			
Ø 450	47	66	106				
Ø 500	52	73	117				

Determining Fz and Vf depending on rotation and teeth number of a saw blade.

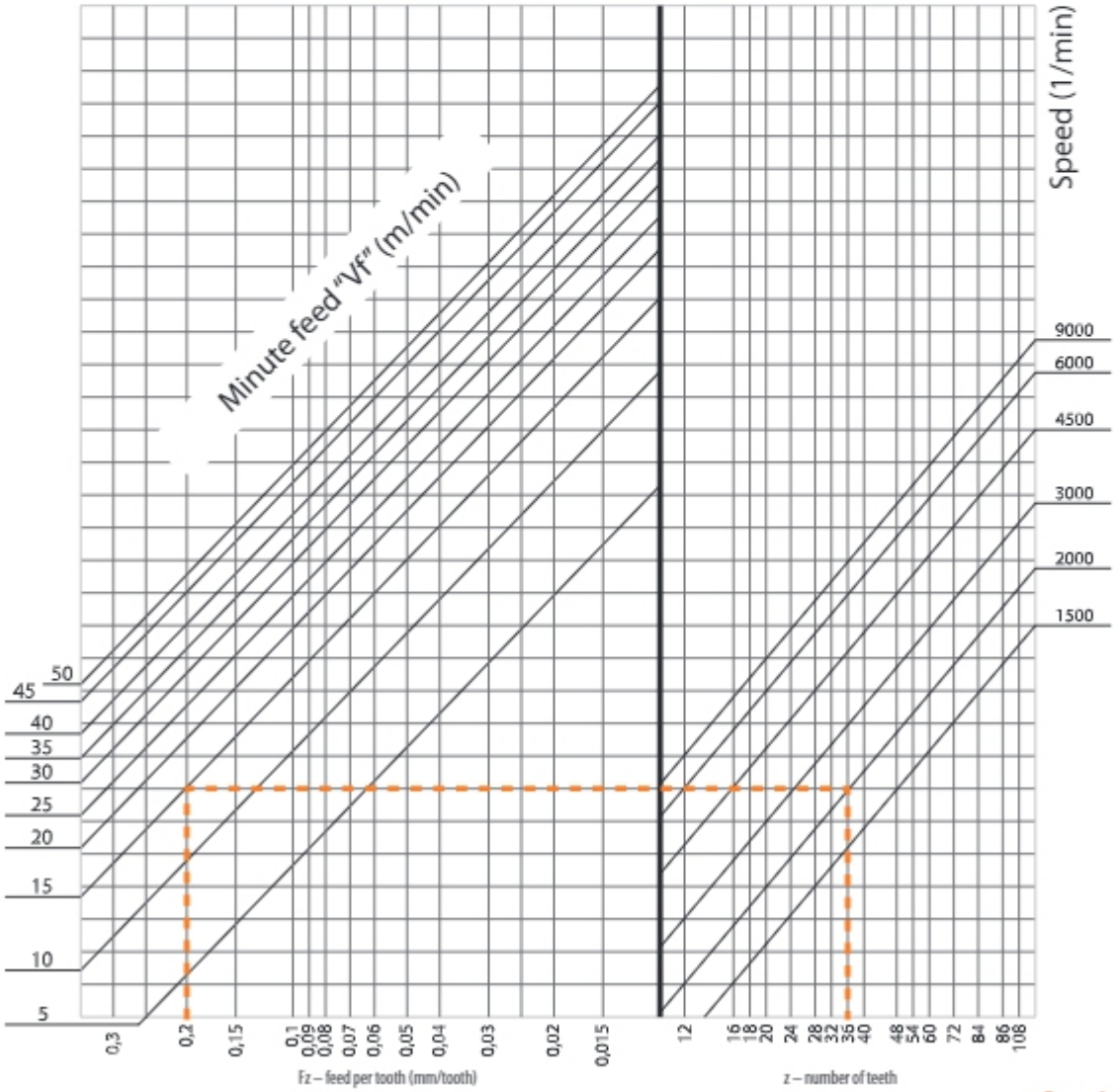

Cutting parameters
Feed
Vf (m/min) F_z (mm/tooth)

$$Vf = \frac{Fz \times n \times z}{1.000} \qquad F_z = \frac{Pm \times 1000}{n \times z}$$

F_z - feed per tooth (mm/tooth), **Vf** - minute feed (m/min), **n** - speed (rpm), **z** - number of teeth

Example:
z=36
n=2000 (1/m)
Vf=15(m/min)
F_z=0,2 (mm)

1

PI-501 EVO2

Saw blade with flat teeth (GM), type **PI-501 EVO2** with carbide tips, designed for longitudinal cutting of dry wood (soft and hard).
Special body coating technology prevents the resin from sticking to the blade and reduces saw blade – wood friction.

Type of cut: single, longitudinal.

Material: dry wood, soft and hard.



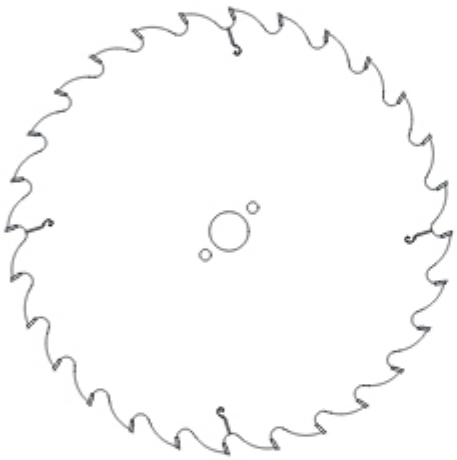



Catalogue number	Type	D mm	B mm	b mm	d mm	Driver holes	z	γ		
P0100930-2	PI-501 EVO2	225	2,3	1,6	60	3/10/74	16	18°	GM	+
P0101000-2	PI-501 EVO2	250	2,6	1,9	30	2/10/60	18	18°	GM	•
P0101001-2	PI-501 EVO2	300	3,2	2,1	30	2/10/60	20	18°	GM	•
P0101002-2	PI-501 EVO2	300	3,2	2,1	30	2/10/60	30	18°	GM	•
P0101003-2	PI-501 EVO2	315	3,4	2,3	30	2/10/60	28	18°	GM	•
P0101004-2	PI-501 EVO2	350	3,6	2,6	30	2/10/60	24	18°	GM	•
P0101005-2	PI-501 EVO2	400	3,8	2,6	30	2/10/60	28	18°	GM	•
P0101006-2	PI-501 EVO2	450	4,0	2,9	30	2/10/60	32	18°	GM	•
P0101007-2	PI-501 EVO2	500	4,4	3,1	30	2/10/60	36	18°	GM	•

PI-503 EVO2

Multi-rip saw blade with flat teeth (GM), type **PI-503 EVO2** with carbide tips, with two open (+2) or two open and two closed (+4) wiper knives designed for longitudinal cutting of solid, dry wood (soft and hard) on a multi-saw blade machine.
Special body coating technology prevents the resin from sticking to the blade and reduces saw blade – wood friction.

Type of cut: longitudinal.

Material: solid wood, soft and hard.



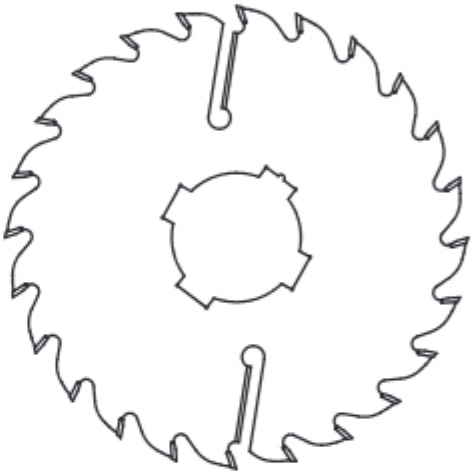



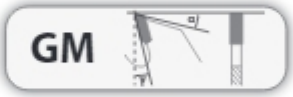





Catalogue number	Type	D mm	B mm	b mm	d mm	Keyways	z	γ		
P0300800-2	PI-503 EVO2	250	2,8	1,8	30	-	24+2	18°	GM	•
P0300801-2	PI-503 EVO2	250	2,8	1,8	70	4/20x5	24+2	18°	GM	•
P0300802-2	PI-503 EVO2	250	2,8	1,8	80	4/20x5	24+2	18°	GM	•
P0300803-2	PI-503 EVO2	300	3,2	2,1	30	-	18+4	18°	GM	•
P0300804-2	PI-503 EVO2	300	3,2	2,1	70	4/20x5	18+4	18°	GM	•
P0300805-2	PI-503 EVO2	300	3,2	2,1	80	4/20x5	18+4	18°	GM	•
P0300862-2	PI-503 EVO2	300	3,2	2,1	90	4/20x5	18+4	18°	GM	+
P0300806-2	PI-503 EVO2	315	3,5	2,3	70	4/20x5	18+4	18°	GM	•
P0300807-2	PI-503 EVO2	315	3,5	2,3	80	4/20x5	18+4	18°	GM	•
P0300808-2	PI-503 EVO2	350	3,5	2,3	30	-	24+4	18°	GM	•
P0300809-2	PI-503 EVO2	350	3,5	2,3	70	4/20x5	24+4	18°	GM	•
P0300810-2	PI-503 EVO2	350	3,5	2,3	80	4/20x5	24+4	18°	GM	•

Two pairs of angularly displaced key ways are meant to place the set in a way to maximally lower the cutting force during work.

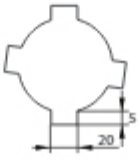

Key ways dimensions in catalogue PI-503 EVO2 saw blades. Other dimensions available on request. When ordering saw blades PI-503 EVO2 with non-standard central bore, quantity and dimensions of key ways must be given.

1

PI-502 EVO2



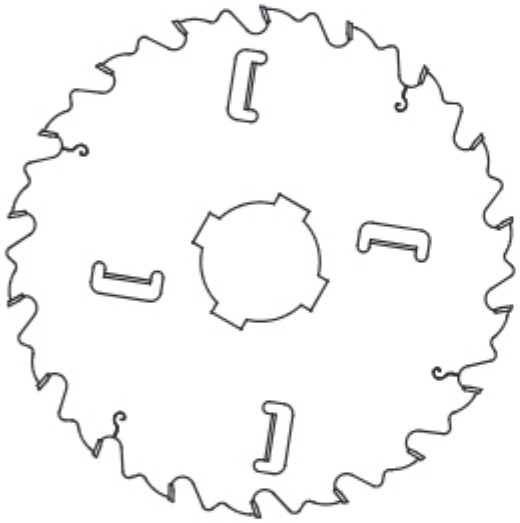

Multi-rip saw blade with feed limiter and flat teeth (GM), type **PI-502 EVO2** with carbide tips, with two open (+2) or two open and two closed (+4) wiper knives designed for longitudinal cutting of solid, dry wood (soft and hard) on a multi-saw blade machine.
Special body coating technology prevents the resin from sticking to the blade and lowers the blade-wood friction.

Type of cut: longitudinal.

Material: dry wood, soft and hard.



Catalogue number	Type	D mm	B mm	b mm	d mm	Keyways	z	γ		
P0200301-2	PI-502 EVO2	250	2,4	1,6	70	4/20x5	16+2	18°	GM	+
P0200302-2	PI-502 EVO2	300	2,8	1,8	70	4/20x5	18+4	18°	GM	+
P0200303-2	PI-502 EVO2	300	2,8	1,8	80	4/20x5	18+4	18°	GM	+
P0200304-2	PI-502 EVO2	350	3,0	2,0	70	4/20x5	20+4	18°	GM	+
P0200305-2	PI-502 EVO2	350	3,0	2,0	80	4/20x5	20+4	18°	GM	+

Two pairs of angularly displaced key ways are meant to place the set in a way to maximally lower the cutting force during work.

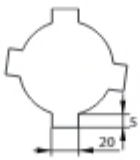

Key ways dimensions in catalogue PI-502 EVO2 saw blades. Other dimensions available on request. When ordering saw blades PI-502 EVO2 with non-standard central bore, quantity and dimensions of key ways must be given.

PI-510 EVO2

Upgraded increased life saw blade type **PI-510 EVO2** with flat (GM) or alternate top bevel (GS) carbide teeth, with two open (+2) or two open and two or four closed (+4, +6) wiper slots designed for longitudinal cutting of wet, soft (conifer) wood on a multi-saw blade machine.
Special body coating technology prevents the resin from sticking to the blade and lowers the blade-wood friction.

Type of cut: longitudinal, multi-saw blade machine.

Material: wet, soft (coniferous) wood.







Catalogue number			Catalogue number			Type	D mm	B mm	b mm	d mm	Keyways	z	γ
P1004000-2	GM	•	P1004050-2	GS	+	PI-510 EVO2	250	3,1	1,8	70	4/20x5	16+2	23°
P1004001-2	GM	•	P1004051-2	GS	+	PI-510 EVO2	250	3,1	1,8	70	4/20x5	20+2	23°
P1004002-2	GM	•	P1004052-2	GS	+	PI-510 EVO2	300	3,4	2,1	70	4/20x5	18+4	23°
P1004003-2	GM	•	P1004053-2	GS	+	PI-510 EVO2	300	3,4	2,1	80	4/20x5	18+4	23°
P1004004-2	GM	•	P1004054-2	GS	+	PI-510 EVO2	315	3,9	2,6	80	4/20x5	18+4	23°
P1004005-2	GM	•	P1004055-2	GS	+	PI-510 EVO2	350	3,9	2,6	70	4/20x5	18+4	23°
P1004006-2	GM	•	P1004056-2	GS	+	PI-510 EVO2	350	3,9	2,6	80	4/20x5	18+4	23°
P1004007-2	GM	•	P1004057-2	GS	+	PI-510 EVO2	350	3,9	2,6	90	4/20x5	18+4	23°
P1004008-2	GM	•	P1004058-2	GS	+	PI-510 EVO2	350	3,9	2,6	70	4/20x5	24+4	23°
P1004009-2	GM	•	P1004059-2	GS	+	PI-510 EVO2	350	3,9	2,6	80	4/20x5	24+4	23°
P1004010-2	GM	•	P1004060-2	GS	+	PI-510 EVO2	400	4,0	2,7	70	4/20x5	18+6	23°
P1004011-2	GM	•	P1004061-2	GS	+	PI-510 EVO2	400	4,0	2,7	80	4/20x5	18+6	23°
P1004012-2	GM	•	P1004062-2	GS	+	PI-510 EVO2	400	4,0	2,7	70	4/20x5	24+4	23°
P1004157-2	GM	+	P1004158-2	GS	+	PI-510 EVO2	450	4,5	3,1	50	4/20x5	18+6	23°
P1004013-2	GM	•	P1004063-2	GS	+	PI-510 EVO2	450	4,5	3,1	70	4/20x5	18+6	23°
P1004014-2	GM	•	P1004064-2	GS	+	PI-510 EVO2	450	4,5	3,1	80	4/20x5	18+6	23°
P1004159-2	GM	+	P1004160-2	GS	+	PI-510 EVO2	450	4,5	3,1	50	4/20x5	24+6	23°
P1004161-2	GM	+	P1004162-2	GS	+	PI-510 EVO2	500	4,5	3,1	50	4/20x5	18+6	23°
P1004015-2	GM	•	P1004065-2	GS	+	PI-510 EVO2	500	4,5	3,1	70	4/20x5	20+6	23°
P1004163-2	GM	+	P1004164-2	GS	+	PI-510 EVO2	500	4,5	3,1	50	4/20x5	24+6	23°
			P1004343-2	GS	•	PI-510 EVO2	630	6,0	4,1	70	4/20x5	18+6	23°

Two pairs of angularly displaced key ways are meant to place the set in a way to maximally lower the cutting force during work.

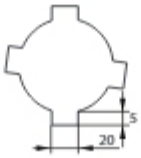

Key ways dimensions in catalogue PI-510 EVO2 saw blades. Other dimensions available on request. When ordering saw blades PI-510 EVO2 with non-standard central bore, quantity and dimensions of key ways must be given.

1

PI-510 EVO2



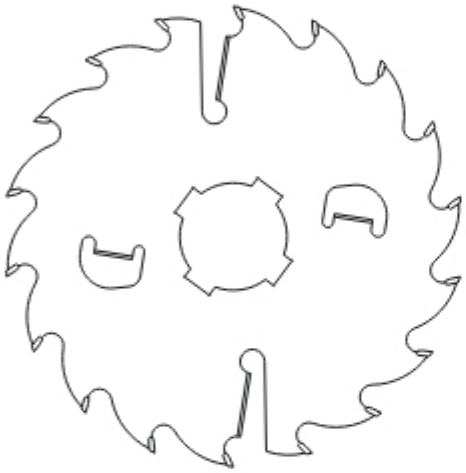

Upgraded multi-rip saw blades, type **PI-510 EVO2** with flat teeth (GM) with increased body thickness for stabilizing work of sets working in difficult conditions. Saw blades should be installed in extreme positions of the set to stabilize the blades working inside.
Special body coating technology prevents the resin from sticking to the blade and lowers the blade-wood friction.

Type of cut: longitudinal, multi-saw blade machine.

Material: wet, soft (coniferous) wood.

EVOLUTION 2

GM

HM

Catalogue number	Type	D mm	B mm	b mm	d mm	Keyways	z	γ		
P1004020-2	PI-510 EVO2	250	4,4	3,1	70	4/20x5	16+2	23°	GM	•
P1004021-2	PI-510 EVO2	300	4,4	3,1	70	4/20x5	16+4	23°	GM	•
P1004022-2	PI-510 EVO2	350	5,0	3,6	70	4/20x5	18+4	23°	GM	•
P1004023-2	PI-510 EVO2	350	5,0	3,6	80	4/20x5	18+4	23°	GM	+
P1004024-2	PI-510 EVO2	350	5,0	3,6	90	4/20x5	18+4	23°	GM	•
P1004025-2	PI-510 EVO2	400	5,2	3,6	70	4/20x5	18+6	23°	GM	•
P1004026-2	PI-510 EVO2	400	5,2	3,6	80	4/20x5	18+6	23°	GM	•
P1004027-2	PI-510 EVO2	450	5,5	4,1	70	4/20x5	18+6	23°	GM	•
P1004028-2	PI-510 EVO2	450	5,5	4,1	80	4/20x5	18+6	23°	GM	+
P1004029-2	PI-510 EVO2	500	5,5	4,1	70	4/20x5	20+6	23°	GM	•

Two pairs of angularly displaced key ways are meant to place the set in a way to maximally lower the cutting force during work.

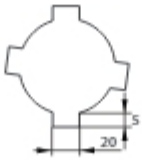

Key ways dimensions in catalogue PI-510 EVO2 saw blades. Other dimensions available on request. When ordering saw blades PI-510 EVO2 with non-standard central bore, quantity and dimensions of key ways must be given.

PI-517 EVO2

Upgraded increased life saw blade type **PI-517 EVO2** with flat (GM) or alternate top bevel (GS) carbide teeth, with two open (+2) or two open and two or four closed (+4, +6) wiper slots designed for longitudinal cutting of wet, soft and hard wood on a multi-saw blade machine.
Special blade geometry together with new, hard carbide increases life of the blade which guarantees long work.
Special body coating technology prevents the resin from sticking to the blade and reduces the blade-wood friction.

Type of cut: longitudinal, multi-saw blade machine.

Material: wet, hard wood.

















Catalogue number			Catalogue number			Type	D mm	B mm	b mm	d mm	Keyways	z	γ
P1701000-2	GM	+	P1701050-2	GS	+	PI-517 EVO2	250	3,4	2,2	70	4/20x5	16+2	20°
P1701001-2	GM	•	P1701051-2	GS	+	PI-517 EVO2	300	3,7	2,5	70	4/20x5	18+4	20°
P1701002-2	GM	•	P1701052-2	GS	+	PI-517 EVO2	300	3,7	2,5	80	4/20x5	18+4	20°
P1701003-2	GM	+	P1701053-2	GS	+	PI-517 EVO2	315	3,7	2,5	80	4/20x5	18+4	20°
P1701004-2	GM	•	P1701054-2	GS	+	PI-517 EVO2	350	4,0	2,7	70	4/20x5	18+4	20°
P1701005-2	GM	•	P1701055-2	GS	+	PI-517 EVO2	350	4,0	2,7	80	4/20x5	18+4	20°
P1701006-2	GM	•	P1701056-2	GS	+	PI-517 EVO2	350	4,0	2,7	90	4/20x5	18+4	20°
P1701007-2	GM	•	P1701057-2	GS	+	PI-517 EVO2	350	4,0	2,7	70	4/20x5	24+4	20°
P1701008-2	GM	+	P1701058-2	GS	+	PI-517 EVO2	350	4,0	2,7	80	4/20x5	24+4	20°
P1701009-2	GM	•	P1701059-2	GS	+	PI-517 EVO2	400	4,2	2,8	70	4/20x5	18+6	20°
P1701010-2	GM	•	P1701060-2	GS	+	PI-517 EVO2	400	4,2	2,8	80	4/20x5	18+6	20°
P1701011-2	GM	•	P1701061-2	GS	+	PI-517 EVO2	400	4,2	2,8	70	4/20x5	24+6	20°
P1701012-2	GM	•	P1701062-2	GS	+	PI-517 EVO2	450	4,7	3,3	70	4/20x5	18+6	20°
P1701013-2	GM	•	P1701063-2	GS	+	PI-517 EVO2	450	4,7	3,3	80	4/20x5	18+6	20°
P1701014-2	GM	+	P1701064-2	GS	+	PI-517 EVO2	500	4,7	3,3	70	4/20x5	20+6	20°
P1701015-2	GM	+	P1701065-2	GS	+	PI-517 EVO2	500	4,7	3,3	80	4/20x5	20+6	20°
P1701247-2	GM	•				PI-517 EVO2	500	5,2	3,3	70	4/20x5	20+6	20°
			P1701120-2	GS	•	PI-517 EVO2	630	6,2	4,1	70	4/20x5	18+6	20°

Two pairs of angularly displaced key ways are meant to place the set in a way to maximally lower the cutting force during work.

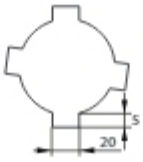

Key ways dimensions in catalogue PI-517 EVO2 saw blades. Other dimensions available on request. When ordering saw blades PI-517 EVO2 with non-standard central bore, quantity and dimensions of key ways must be given.

1

PI-515 EVO2



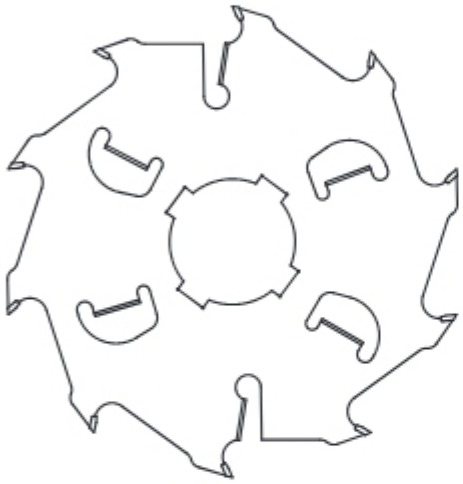

Upgraded multi-rip saw blades, type **PI-515 EVO2** with flat (GM) or alternate top bevel (GS) teeth and carbide tips, designed for longitudinal cutting of wet, soft wood with low feed (up to 10 m/min) on a multi-saw blade machine.
Special body coating technology prevents the resin from sticking to the blade and reduces the blade-wood friction.

Type of cut: longitudinal, multi-saw blade machine.

Material: wet, soft (coniferous) wood.



EVOLUTION 2





Catalogue number			Catalogue number			Type	D mm	B mm	b mm	d mm	Keyways	z	y
P1500400-2	GM	+	P1500450-2	GS	+	PI-515 EVO2	250	3,4	1,9	70	4/20x5	10+2	23°
P1500401-2	GM	•	P1500451-2	GS	+	PI-515 EVO2	300	3,6	2,3	70	4/20x5	10+4	23°
P1500402-2	GM	•	P1500452-2	GS	+	PI-515 EVO2	300	3,6	2,3	80	4/20x5	10+4	23°
P1500403-2	GM	•	P1500453-2	GS	+	PI-515 EVO2	350	3,9	2,6	70	4/20x5	10+4	23°
P1500404-2	GM	•	P1500454-2	GS	+	PI-515 EVO2	350	3,9	2,6	80	4/20x5	10+4	23°
P1500405-2	GM	•	P1500455-2	GS	+	PI-515 EVO2	400	4,0	2,7	70	4/20x5	12+4	23°
P1500406-2	GM	•	P1500456-2	GS	+	PI-515 EVO2	400	4,0	2,7	80	4/20x5	12+4	23°
P1500407-2	GM	•	P1500457-2	GS	+	PI-515 EVO2	450	4,5	3,1	70	4/20x5	14+6	23°
P1500408-2	GM	•	P1500458-2	GS	•	PI-515 EVO2	500	5,0	3,6	70	4/20x5	14+6	23°

Two pairs of angularly displaced key ways are meant to place the set in a way to maximally lower the cutting force during work.

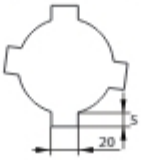

Key ways dimensions in catalogue PI-515 EVO2 saw blades. Other dimensions available on request. When ordering saw blades PI-515 EVO2 with non-standard central bore, quantity and dimensions of key ways must be given.

PI-510W EVO2

Upgraded multi-rip saw blades, type **PI-510W EVO2** with flat (GM) or alternate top bevel (GS) carbide teeth with two open and two closed or four closed (+4, +6) wiper knives designed for longitudinal cutting of solid, wet wood on a multi-saw blade machine. Additionally, PI-510W EVO2 saw blades are equipped with chip remover which cools down and stabilises the blade in the material. Wolf tooth geometry allows for regrinding the blades on machines of old type. Special EVO2 gas coating technology prevents the resin from stocking to th blade and reduces saw blade-wood friction.

Type of cut: longitudinal, multi-saw blade machine.

Material: wet, soft (coniferous) wood.



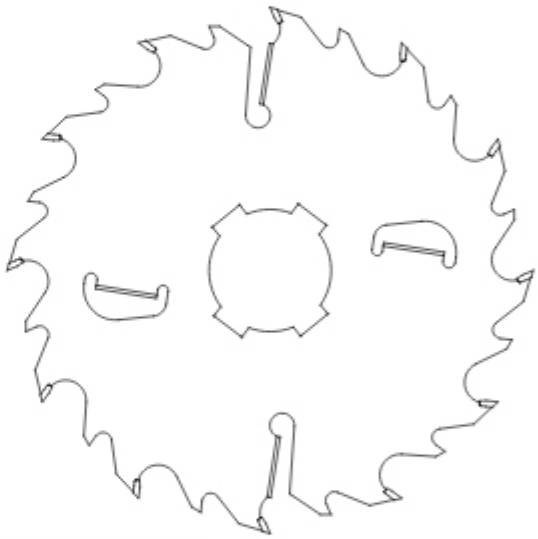









Catalogue number	Type	D mm	B mm	b mm	d mm	Keyways	z	γ		
P1005010-2	PI-510W EVO2	300	3,4	2,1	70	4/20x5	12+4	23°	GS	•
P1005300-2	PI-510W EVO2	300	3,7	2,5	70	4/20x5	12+4	23°	GS	•
P1005330-2	PI-510W EVO2	300	4,2	2,8	70	4/20x5	12+4	23°	GS	•
P1004492-2	PI-510W EVO2	350	3,9	2,6	70	4/20x5	14+4	23°	GM	•
P1004239-2	PI-510W EVO2	350	3,9	2,6	70	4/20x5	14+4	23°	GS	•
P1004493-2	PI-510W EVO2	350	3,9	2,6	80	4/20x5	14+4	23°	GM	+
P1005331-2	PI-510W EVO2	350	4,2	2,8	70	4/20x5	14+4	23°	GS	•
P1005301-2	PI-510W EVO2	400	4,2	2,8	70	4/20x5	14+4	23°	GS	•
P1003933-2	PI-510W EVO2	600	6,0	4,1	80	4/20x5	18+6	23°	GM	•
P1005332-2	PI-510W EVO2	630	6,2	4,1	70	4/20x5	18+6	23°	GS	•

1

PI-508 EVO2



EVOLUTION 2

GM

Saw blades with feed limiter and flat teeth (GM), type **PI-508 EVO2** with carbide tips, designed for longitudinal cutting of dry wood (soft and hard).
Special body coating technology prevents the resin from sticking to the blade and reduces the blade-wood friction.

Type of cut: longitudinal, single.

Material: dry wood, soft and hard.

HM

Catalogue number	Type	D mm	B mm	b mm	d mm	Driver holes	z	γ		
P0800150-2	PI-508 EVO2	300	3,2	2,1	30	2/10/60 + 2/7/42 + 2/9,5/46,5	14	18°	GM	•
P0800228-2	PI-508 EVO2	300	3,2	2,1	30	2/10/60 + 2/7/42 + 2/9,5/46,5	20	18°	GM	•
P0800151-2	PI-508 EVO2	350	3,6	2,6	30	2/10/60 + 2/7/42 + 2/9,5/46,5	16	18°	GM	•
P0800278-2	PI-508 EVO2	350	3,6	2,6	30	2/10/60 + 2/7/42 + 2/9,5/46,5	24	18°	GM	•
P0800152-2	PI-508 EVO2	400	3,8	2,6	30	2/10/60 + 2/7/42 + 2/9,5/46,5	18	18°	GM	•
P0800229-2	PI-508 EVO2	400	3,8	2,6	30	2/10/60 + 2/7/42 + 2/9,5/46,5	28	18°	GM	•
P0800153-2	PI-508 EVO2	450	4,0	2,9	30	2/10/60 + 2/7/42 + 2/9,5/46,5	20	18°	GM	•
P0800230-2	PI-508 EVO2	450	4,0	2,9	30	2/10/60 + 2/7/42 + 2/9,5/46,5	32	18°	GM	+
P0800264-2	PI-508 EVO2	500	4,0	2,9	30	2/10/60 + 2/7/42 + 2/9,5/46,5	36	18°	GM	+

PI-508V EVO2

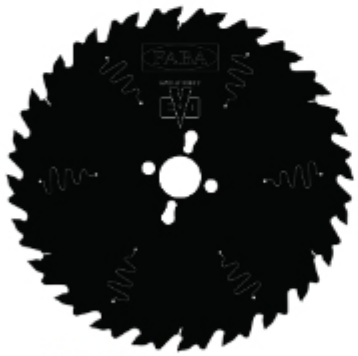

EVOLUTION 2

GS

Saw blades with feed limiter and alternate top bevel teeth (GS), type **PI-508V EVO2** with carbide tips, designed for longitudinal and cross cutting of dry, soft and hard wood.
Special laser cuts (V) reduce the noise by about a half.
Special body coating technology prevents the resin from sticking to the blade and reduces the blade-wood friction.

Type of cut: longitudinal and cross, single.

Material: dry wood, soft and hard.

HM

Catalogue number	Type	D mm	B mm	b mm	d mm	Driver holes	z	γ		
P0800134-2	PI-508V EVO2	250	3,2	2,1	30	2/10/60 + 2/7/42 + 2/9,5/46,5	24	18°	GS	•
P0800313-2	PI-508V EVO2	300	3,2	2,1	30	2/10/60 + 2/7/42 + 2/9,5/46,5	28	18°	GS	•
P0800314-2	PI-508V EVO2	315	3,2	2,1	30	2/10/60 + 2/7/42 + 2/9,5/46,5	28	18°	GS	•
P0800350-2	PI-508V EVO2	355	3,6	2,5	30	2/10/60 + 2/7/42 + 2/9,5/46,5	32	18°	GS	•
P0800351-2	PI-508V EVO2	400	4,0	2,9	30	2/10/60 + 2/7/42 + 2/9,5/46,5	36	18°	GS	•
P0800141-2	PI-508V EVO2	450	4,0	2,9	30	2/10/60 + 2/7/42 + 2/9,5/46,5	40	18°	GS	•
P0800564-2	PI-508V EVO2	500	4,0	2,9	30	2/10/60 + 2/7/42 + 2/9,5/46,5	44	18°	GS	•

PI-509 EVO2

Saw blade with feed limiter and flat teeth (GM), type **PI-509 EVO2** with carbide tips, designed for longitudinal cutting of wet, soft (coniferous) wood.
Special body coating technology prevents the resin from sticking to the blade and reduces the blade-wood friction.

Type of cut: longitudinal, single.

Material: wet, soft (coniferous) wood.



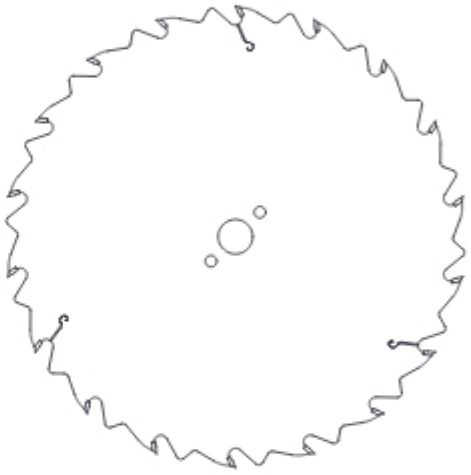



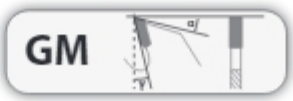



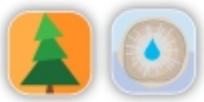

Catalogue number	Type	D mm	B mm	b mm	d mm	Driver holes	z	γ		
P0900100-2	PI-509 EVO2	300	3,6	2,3	30	2/10/60 + 2/7/42 + 2/9,5/46,5	14	23°	GM	•
P0900101-2	PI-509 EVO2	350	3,9	2,6	30	2/10/60 + 2/7/42 + 2/9,5/46,5	16	23°	GM	•
P0900102-2	PI-509 EVO2	400	4,0	2,7	30	2/10/60	18	23°	GM	•
P0900103-2	PI-509 EVO2	450	4,5	3,1	30	2/10/60	20	23°	GM	•

PI-511 EVO2



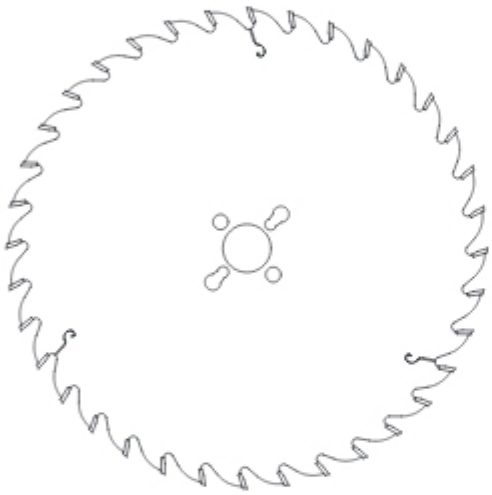

Saw blades with flat teeth (GM), type **PI-511 EVO2** with carbide tips, designed for longitudinal cutting of wet, hard wood.
Special body coating technology prevents the resin from sticking to the blade and reduces the blade-wood friction.

Type of cut: longitudinal, single.

Material: wet hard wood.



EVOLUTION 2



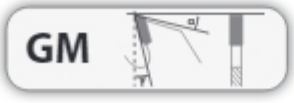



Catalogue number	Type	D mm	B mm	b mm	d mm	Driver holes	z	γ		
P1100251-2	PI-511 EVO2	250	3,5	2,3	30	2/10/60 + 2/7/42 + 2/9,5/46,5	30	18°	GM	•
P1100252-2	PI-511 EVO2	300	3,5	2,3	30	2/10/60 + 2/7/42 + 2/9,5/46,5	36	18°	GM	•
P1100253-2	PI-511 EVO2	350	3,8	2,6	30	2/10/60 + 2/7/42 + 2/9,5/46,5	42	18°	GM	•
P1100254-2	PI-511 EVO2	400	4,0	2,6	30	2/10/60	48	18°	GM	+

PI-513P EVO2

Saw blades for very pecise cutting of solid wood, type **PI--513P EVO2** with special barrel-shaped tips (GM-B) smoothing the cut surface.
Saw blades PI-513P EVO2 have more precise body made in the new Premium technology, which together with improved blade geometry and optimal tensioning significantly increase life of the blade. Additionally, the new body coating EVO2 technology aims at reducing body roughness, increasing saw blade stiffness and stability which direcly results in longer life of the tool.

Type of cut: very precise, longitudinal, single.

Material: solid dry, soft and hard wood.



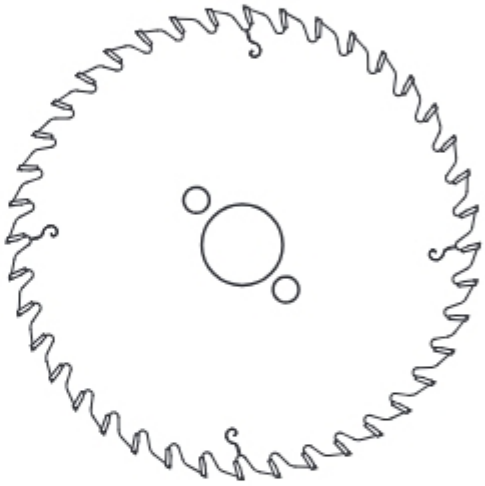







Catalogue number	Type	D mm	B mm	b mm	d mm	Driver holes	z	γ		
SP1300500	PI-513P EVO2	250	3,0	2,0	60	3/10/74	32	20°	GM-B	+
SP1300501	PI-513P EVO2	300	3,2	2,2	60	3/10/74	36	20°	GM-B	+

1

PI-504V



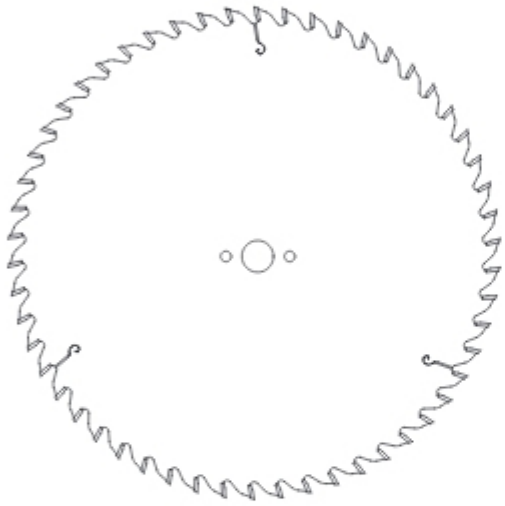

Saw blades with medium teeth number and alternate top bevel teeth (GS), type **PI-504V** with carbide tips, designed for longitudinal cutting of glued wood as well as solid, dry wood, used on manual formatting machines and automatic lines.

Special laser cuts (V) reduce the noise by about a half.

Type of cut: longitudinal and cross, single.

Material: glued wood, solid dry wood.



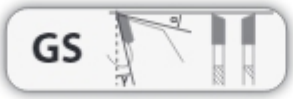



Catalogue number	Type	D mm	B mm	b mm	d mm	Driver holes	z	γ		
P0405001	PI-504V	250	3,2	2,2	30	2/10/60 + 2/7/42 + 2/9,5/46,5	40	10°	GS	•
P0405002	PI-504V	300	3,2	2,2	30	2/10/60 + 2/7/42 + 2/9,5/46,5	48	10°	GS	•
P0405003	PI-504V	350	3,2	2,2	30	2/10/60 + 2/7/42 + 2/9,5/46,5	54	10°	GS	•
P0405004	PI-504V	400	3,5	2,5	30	2/10/60 + 2/7/42 + 2/9,5/46,5	48	10°	GS	•
P0405005	PI-504V	400	3,5	2,5	30	2/10/60 + 2/7/42 + 2/9,5/46,5	60	10°	GS	•
P0405006	PI-504V	450	3,8	2,8	30	2/10/60 + 2/7/42 + 2/9,5/46,5	66	10°	GS	+
P0405007	PI-504V	500	4,0	2,8	30	2/10/60 + 2/7/42 + 2/9,5/46,5	72	10°	GS	+

PI-505V

Saw blades with high teeth number and alternate top bevel teeth (GS), type **PI-505V** with carbide tips, designed for longitudinal cutting of glued wood, plywood and solid wood, used on manual formatting machines and automatic lines.

Special laser cuts (V) reduce the noise by about a half.

Type of cut: longitudinal and cross, single.

Material: glued wood, plywood, solid dry wood.



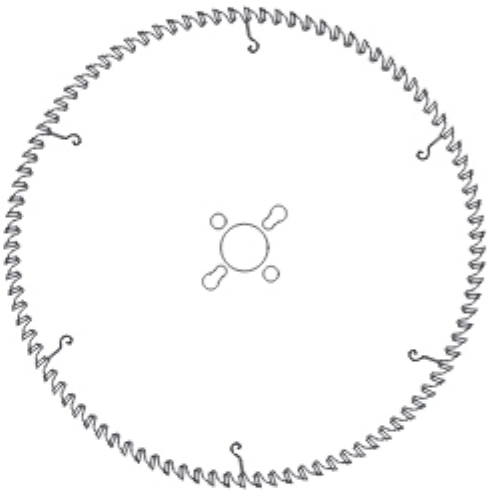



Catalogue number	Type	D mm	B mm	b mm	d mm	Driver holes	z	γ		
P0505001	PI-505V	250	3,2	2,2	30	2/10/60 + 2/7/42 + 2/9,5/46,5	60	10°	GS	•
P0505002	PI-505V	250	3,2	2,2	30	2/10/60 + 2/7/42 + 2/9,5/46,5	80	10°	GS	+
P0505003	PI-505V	300	3,2	2,2	30	2/10/60 + 2/7/42 + 2/9,5/46,5	60	10°	GS	+
P0505004	PI-505V	300	3,2	2,2	30	2/10/60 + 2/7/42 + 2/9,5/46,5	72	10°	GS	•
P0505005	PI-505V	300	3,2	2,2	30	2/10/60 + 2/7/42 + 2/9,5/46,5	96	10°	GS	•
P0505006	PI-505V	315	3,2	2,2	30	2/10/60 + 2/7/42 + 2/9,5/46,5	72	10°	GS	•
P0505008	PI-505V	350	3,2	2,2	30	2/10/60 + 2/7/42 + 2/9,5/46,5	84	10°	GS	•
P0505009	PI-505V	350	3,2	2,2	30	2/10/60 + 2/7/42 + 2/9,5/46,5	108	10°	GS	•
P0505010	PI-505V	400	3,5	2,5	30	2/10/60 + 2/7/42 + 2/9,5/46,5	96	10°	GS	•
P0505011	PI-505V	400	3,5	2,5	30	2/10/60 + 2/7/42 + 2/9,5/46,5	120	10°	GS	+
P0505012	PI-505V	450	3,8	2,8	30	2/10/60 + 2/7/42 + 2/9,5/46,5	108	10°	GS	+
P0505014	PI-505V	500	4,0	2,8	30	2/10/60 + 2/7/42 + 2/9,5/46,5	120	10°	GS	+

1

PI-504VT Premium



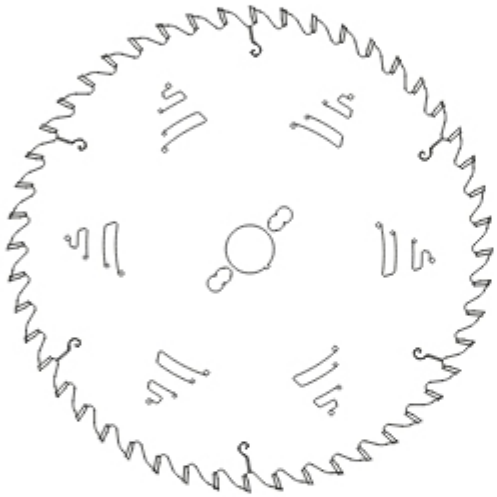







Catalogue number	Type	D mm	B mm	b mm	d mm	Driver holes	z	γ		
SP0405001	PI-504VT Premium	250	3,2	2,2	30	2/10/60 + 2/7/42 + 2/9,5/46,5	40	10°	GS	•
SP0405002	PI-504VT Premium	300	3,2	2,2	30	2/10/60 + 2/7/42 + 2/9,5/46,5	48	10°	GS	•
SP0405003	PI-504VT Premium	350	3,2	2,2	30	2/10/60 + 2/7/42 + 2/9,5/46,5	54	10°	GS	•
SP0405004	PI-504VT Premium	400	3,5	2,5	30	2/10/60 + 2/7/42 + 2/9,5/46,5	48	10°	GS	•
SP0405005	PI-504VT Premium	400	3,5	2,5	30	2/10/60 + 2/7/42 + 2/9,5/46,5	60	10°	GS	•
SP0405006	PI-504VT Premium	450	3,8	2,8	30	2/10/60 + 2/7/42 + 2/9,5/46,5	66	10°	GS	•
SP0405007	PI-504VT Premium	500	4,0	2,8	30	2/10/60 + 2/7/42 + 2/9,5/46,5	72	10°	GS	•

PI-505VT Premium

Universal saw blades with with high teeth number type **PI-505VT Premium**, alternate top bevel teeth (GS), with very hard carbide tips (T), designed for longitudinal and cross cutting of glued wood, plywood and chipboard used on manual formatting machines and automatic lines.

Special laser cuts (V) reduce the noise by about a half.

Type of cut: longitudinal and cross, single.

Material: plywood, laminated board, laminates, LDF, MDF.











Catalogue number	Type	D mm	B mm	b mm	d mm	Driver holes	z	γ		
SP0505001	PI-505VT Premium	250	3,2	2,2	30	2/10/60 + 2/7/42 + 2/9,5/46,5	60	10°	GS	•
SP0505002	PI-505VT Premium	250	3,2	2,2	30	2/10/60 + 2/7/42 + 2/9,5/46,5	80	10°	GS	•
SP0505003	PI-505VT Premium	300	3,2	2,2	30	2/10/60 + 2/7/42 + 2/9,5/46,5	60	10°	GS	•
SP0505004	PI-505VT Premium	300	3,2	2,2	30	2/10/60 + 2/7/42 + 2/9,5/46,5	72	10°	GS	•
SP0505005	PI-505VT Premium	300	3,2	2,2	30	2/10/60 + 2/7/42 + 2/9,5/46,5	96	10°	GS	•
SP0505006	PI-505VT Premium	315	3,2	2,2	30	2/10/60 + 2/7/42 + 2/9,5/46,5	72	10°	GS	•
SP0505007	PI-505VT Premium	315	3,2	2,2	30	2/10/60 + 2/7/42 + 2/9,5/46,5	100	10°	GS	•
SP0505008	PI-505VT Premium	350	3,2	2,2	30	2/10/60 + 2/7/42 + 2/9,5/46,5	84	10°	GS	•
SP0505009	PI-505VT Premium	350	3,2	2,2	30	2/10/60 + 2/7/42 + 2/9,5/46,5	108	10°	GS	•
SP0505010	PI-505VT Premium	400	3,5	2,5	30	2/10/60 + 2/7/42 + 2/9,5/46,5	96	10°	GS	•
SP0505011	PI-505VT Premium	400	3,5	2,5	30	2/10/60 + 2/7/42 + 2/9,5/46,5	120	10°	GS	•
SP0505012	PI-505VT Premium	450	3,8	2,8	30	2/10/60 + 2/7/42 + 2/9,5/46,5	108	10°	GS	•
SP0505013	PI-505VT Premium	450	4,8	3,5	30	2/10/60 + 2/7/42 + 2/9,5/46,5	138	10°	GS	•
SP0505014	PI-505VT Premium	500	4,0	2,8	30	2/10/60 + 2/7/42 + 2/9,5/46,5	120	10°	GS	•
SP0505015	PI-505VT Premium	500	4,8	3,5	30	2/10/60 + 2/7/42 + 2/9,5/46,5	144	10°	GS	•

1

PI-605VT Premium



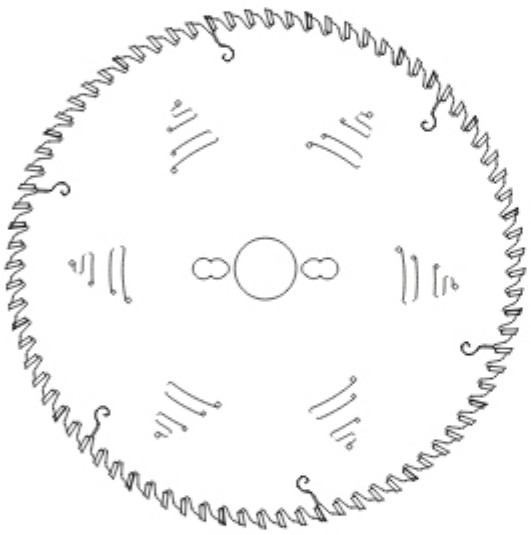

PI-605VT Premium universal saw blades with high number of COMBI type teeth with very hard carbide tips (T), designed for very precise longitudinal and cross cutting of soft and hard solid wood, plywood, laminates, various types of wood based board covered with paper, foil and veneer as well as cellular board on hand operated formatting machines and automatic lines.

Type of cut: single, cross and longitudinal.

Material: wood, glued wood, plywood, chipboard, laminated chipboard, MDF, paper and foil covered board, cellular board.

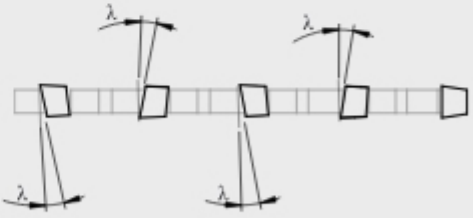

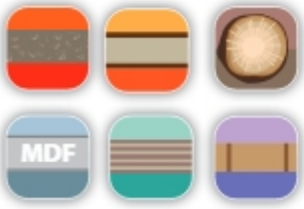





Catalogue number	Type	D mm	B mm	b mm	d mm	Driver holes	z	γ		
SP6050001	PI-605 VT Premium	250	3,0	2,2	30	2/10/60 + 2/7/42 + 2/9,5/46,5	80	15°	GS/GM	•
SP6050002	PI-605 VT Premium	303	3,0	2,2	30	2/10/60 + 2/7/42 + 2/9,5/46,5	100	15°	GS/GM	•
SP6050003	PI-605 VT Premium	350	3,0	2,2	30	2/10/60 + 2/7/42 + 2/9,5/46,5	100	15°	GS/GM	•

PI-507S

Universal saw blades with hollow teeth (GŁ/GD), type **PI-507S** with super hard carbide tips (S), designed for precise longitudinal and cross cutting of chipboard, laminated board, laminates, LDF and MDF and other homogenous materials without a scoring saw.

Type of cut: precise longitudinal and cross, without a scoring saw, single.

Material: plywood, laminated board, laminates, LDF, MDF, other hard homogenous materials.









Catalogue number	Type	D mm	B mm	b mm	d mm	Driver holes	z	γ		
P0700203	PI-507S	250	3,2	2,2	30	2/10/60 + 2/7/42 + 2/9,5/46,5	48	10°	GŁ/GD	+
P0700116	PI-507S	303	3,2	2,2	30	2/10/60 + 2/7/42 + 2/9,5/46,5	60	10°	GŁ/GD	•
P0700121	PI-507S	303	3,2	2,2	30	2/10/60 + 2/7/42 + 2/9,5/46,5	60	-5°	GŁ/GD	•
P0700068	PI-507S	350	3,2	2,2	30	2/10/60 + 2/7/42 + 2/9,5/46,5	72	10°	GŁ/GD	•
P0700120	PI-507S	400	3,5	2,5	30	2/10/60	84	10°	GŁ/GD	+

PI-507VS Premium

Increased life and noise reduced universal saw blades with hollow teeth (GŁ/GD), type **PI-507VS Plus** with super hard carbide tips (S), designed for precise longitudinal and cross cutting of chipboard, laminated board, laminates, LDF and MDF and other homogenous materials without a scoring saw.
Thanks to new blade geometry saw blades type **PI-507VS Plus** are characterized by increased life and work efficiency.
Special laser cuts (V) reduce the noise by about a half.

Type of cut: precise longitudinal and cross, without a scoring saw, single.

Material: plywood, laminated board, laminates, LDF, MDF, other hard homogenous materials.









Catalogue number	Type	D mm	B mm	b mm	d mm	Driver holes	z	γ		
SP0700200	PI-507VS Premium	250	3,2	2,2	30	2/10/60 + 2/7/42 + 2/9,5/46,5	52	5°	GŁ/GD	•
SP0700201	PI-507VS Premium	303	3,2	2,2	30	2/10/60 + 2/7/42 + 2/9,5/46,5	64	5°	GŁ/GD	•
SP0700202	PI-507VS Premium	350	3,2	2,2	30	2/10/60 + 2/7/42 + 2/9,5/46,5	76	5°	GŁ/GD	•

1

PI-512VT



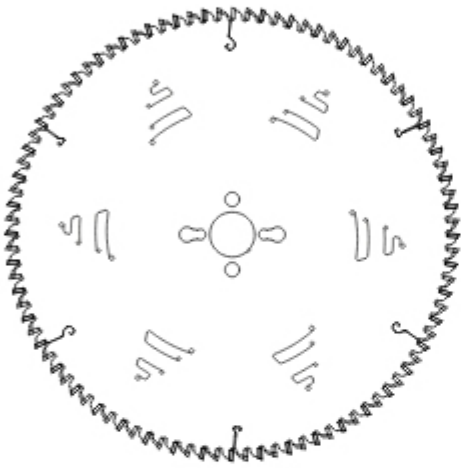

Universal saw blades with alternate top bevel teeth with large bevel angle (GS=38°), type **PI-512 VT** with very hard carbide tips (T), designed for very precise (clean) cutting at an angle of solid wood and MDF without a scoring saw. Special laser cuts (V) reduce the noise by about a half.

Type of cut: precise, at an angle, longitudinal and cross, without a scoring saw.

Material: solid wood, MDF.



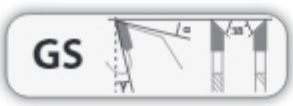



Catalogue number	Type	D mm	B mm	b mm	d mm	Driver holes	z	γ		
P1200002-15	PI-512VT	250	3,2	2,2	30	2/10/60 + 2/7/42 + 2/9,5/46,5	80	-6°	GS	•
P1200001-15	PI-512VT	300	3,2	2,2	30	2/10/60 + 2/7/42 + 2/9,5/46,5	96	-6°	GS	•
P1200004-15	PI-512VT	350	3,5	2,5	30	2/10/60 + 2/7/42 + 2/9,5/46,5	108	-6°	GS	•

PI-516V Premium

Universal saw blades with alternate top bevel teeth with large bevel angle (GS=30°), type **PI-516V Premium** with hard carbide tips, designed for dynamic and clean cross cutting of solid wood on automatic lines.
Special laser cuts (V) reduce the noise by about a half.

Type of cut: cross, dynamic, clean.

Material: solid wood, MDF.





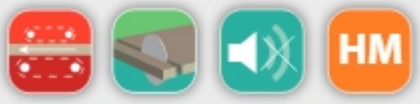





Catalogue number	Type	D mm	B mm	b mm	d mm	Driver holes	z	γ		
SP1601001	PI-516V Premium	400	3,5	2,8	30	2/10/60 + 2/7/42 + 2/9,5/46,5 + 2/11/150	120	10°	GS	•
SP1601002	PI-516V Premium	500	4,0	2,8	35	2/10/60	108	10°	GS	•
SP1601003	PI-516V Premium	500	4,8	3,5	30	2/10/60	144	10°	GS	•
SP1601004	PI-516V Premium	500	4,8	3,5	35	2/10/60	144	10°	GS	•

1

PI-519 Premium



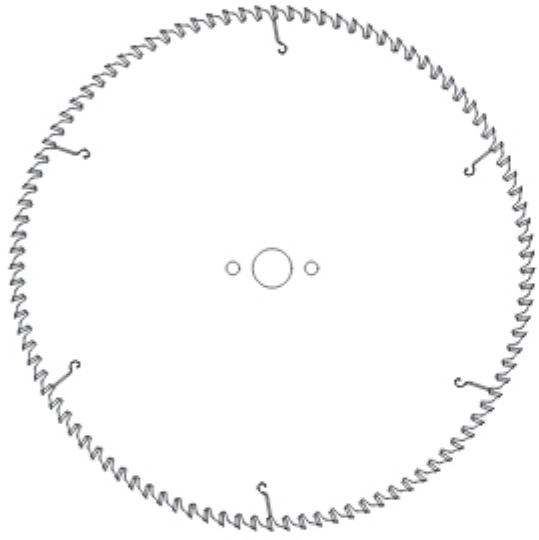

Universal saw blades with special V-top tooth shape (GV), type **PI-519** designed for dynamic and clean cutting across the grain of solid wood with very hight feed speed on automatic lines.
Special tooth shape allows for precise and clean (without ripping) doube-side formatting of furniture elements from solid (soft and hard) wood as well as gued wood.

Type of cut: cross, dynamic, clean.

Material: solid wood, plywood, glued wood.



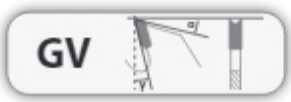



Catalogue number	Type	D mm	B mm	b mm	d mm	z	γ		
SP1900001	PI-519 Premium	400	4,0	3,0	30	100	10°	GV	+
SP1900002	PI-519 Premium	450	4,8	3,5	30	100	10°	GV	+
SP1900003	PI-519 Premium	450	4,8	3,5	30	120	10°	GV	+
SP1900004	PI-519 Premium	500	5,0	3,5	30	144	10°	GV	•

PI-506VT

Panel sizing saw blades with high teeth number and group triple-chip + flat teeth (GA), type **PI-506VT**, with very hard carbide tips (T), designed for single board cutting.
Special laser cuts (V) reduce the noise by about a half.

Type of cut: cross and longitudinal, single.

Material: plywood, chipboard, laminated board, laminates, MDF.





Catalogue number	Type	D mm	B mm	b mm	d mm	Driver holes	z	γ		
P0605001	PI-506VT	250	3,2	2,2	30	2/10/60 + 2/7/42 + 2/9,5/46,5	60	10°	GA	•
P0605002	PI-506VT	250	3,2	2,2	30	2/10/60 + 2/7/42 + 2/9,5/46,5	80	10°	GA	•
P0605003	PI-506VT	300	3,2	2,2	30	2/10/60 + 2/7/42 + 2/9,5/46,5	60	10°	GA	•
P0605005	PI-506VT	300	3,2	2,2	30	2/10/60 + 2/7/42 + 2/9,5/46,5	96	10°	GA	•
P0605007	PI-506VT	315	3,2	2,2	30	2/10/60 + 2/7/42 + 2/9,5/46,5	100	10°	GA	•
P0605009	PI-506VT	350	3,2	2,2	30	2/10/60 + 2/7/42 + 2/9,5/46,5	108	10°	GA	•
P0605011	PI-506VT	400	3,5	2,5	30	2/10/60 + 2/7/42 + 2/9,5/46,5	120	10°	GA	•

PI-506VS Premium

Increased life panel sizing saw blades type **PI-506VS Premium** with super hard carbide tips (S), designed for cutting chipboard, laminated board, MDF, HDF and other homogenous materials without impurities on manual formatting machines and automatic lines.

Optimal tensioning as well as new type of noise-reduction cuts noticeably increase stiffness and stability of the saw blade which has a direct effect on life of the tool.

Type of cut: cross and longitudinal, single.
Material: chipboard, laminated board, MDF, HDF.





Catalogue number	Type	D mm	B mm	b mm	d mm	Driver holes	z	γ		
SP0605002	PI-506VS Premium	250	3,2	2,2	30	2/10/60 + 2/7/42 + 2/9,5/46,5	80	10°	GA	•
SP0605003	PI-506VS Premium	300	3,2	2,2	30	2/10/60 + 2/7/42 + 2/9,5/46,5	60	10°	GA	•
SP0605005	PI-506VS Premium	300	3,2	2,2	30	2/10/60 + 2/7/42 + 2/9,5/46,5	96	10°	GA	•
SP0605007	PI-506VS Premium	315	3,2	2,2	30	2/10/60 + 2/7/42 + 2/9,5/46,5	100	10°	GA	•
SP0605009	PI-506VS Premium	350	3,2	2,2	30	2/10/60 + 2/7/42 + 2/9,5/46,5	108	10°	GA	•
SP0605011	PI-506VS Premium	400	3,5	2,5	30	2/10/60 + 2/7/42 + 2/9,5/46,5	120	10°	GA	•

1

PI-521VT

Panel sizing saw blades with medium teeth number and group triple-chip + flat teeth (GA), type **PI-521VT**, with very hard carbide tips (T), designed for rough cutting of chipboard, laminated board, LDF and MDF in stack.
Special laser cuts (V) reduce the noise by about a half.

Type of cut: rough cutting, cross and longitudinal, in stack.

Material: chipboard, laminated board, LDF, MDF.









Catalogue number	Type	D mm	B mm	b mm	d mm	Driver holes	z	γ		
P2105001	PI-521VT	300	4,4	3,2	30	2/10/60+2/13/94+2/9/46+2/9,5/46,5+2/7/42	60	15°	GA	+
P2105002	PI-521VT	300	4,4	3,2	60	2/9/110+2/10/80+2/11/85+2/14/100+2/11/115+2/19/120+2/14/125+2/11/148	60	15°	GA	+
P2105003	PI-521VT	300	4,4	3,2	65	2/9/110	60	15°	GA	+
P2105004	PI-521VT	300	4,4	3,2	80	4/8,5/100+2/7/110+2/14/110	60	15°	GA	+
P2105005	PI-521VT	300	4,4	3,2	60	2/9/110+2/10/80+2/11/85+2/14/100+2/11/115+2/19/120+2/14/125+2/11/148	72	15°	GA	+
P2105006	PI-521VT	300	4,4	3,2	75	2/9/110	72	15°	GA	+
P2105007	PI-521VT	305	4,4	3,2	30	2/10/60+2/13/94+2/9/46+2/9,5/46,5+2/7/42	60	15°	GA	+
P2105008	PI-521VT	310	4,4	3,2	60	2/10/80+2/11/85+2/14/100+2/11/115+2/19/120+2/14/125+2/11/148	72	15°	GA	+
P2105009	PI-521VT	320	4,4	3,2	30	2/10/60+2/13/94+2/9/46+2/9,5/46,5+2/7/42	60	15°	GA	+
P2105010	PI-521VT	320	4,4	3,2	65	2/9/110+2/9/100	60	15°	GA	+
P2105011	PI-521VT	320	4,4	3,2	75	3/13/95	60	15°	GA	+
P2105012	PI-521VT	320	4,4	3,2	80	4/8,5/100+2/7/110+2/14/110	60	15°	GA	+
P2105013	PI-521VT	330	4,4	3,2	50	4/13/80	60	15°	GA	+
P2105014	PI-521VT	350	4,4	3,2	30	2/10/60+2/13/94+2/9/46+2/9,5/46,5+2/7/42	72	15°	GA	+
P2105015	PI-521VT	350	4,4	3,2	60	2/9/110+2/10/80+2/11/85+2/14/100+2/11/115+2/19/120+2/14/125+2/11/148	72	15°	GA	+
P2105016	PI-521VT	350	4,4	3,2	80	4/8,5/100+2/7/110+2/14/110	72	15°	GA	+
P2105017	PI-521VT	355	4,4	3,2	30	2/10/60+2/13/94+2/9/46+2/9,5/46,5+2/7/42	72	15°	GA	+
P2105018	PI-521VT	355	4,4	3,2	60	2/9/110+2/10/80+2/11/85+2/14/100+2/11/115+2/19/120+2/14/125+2/11/148	72	15°	GA	+
P2105019	PI-521VT	355	4,4	3,2	65	2/9/110+2/9/100	72	15°	GA	+
P2105020	PI-521VT	355	4,4	3,2	75	-	72	15°	GA	+
P2105021	PI-521VT	355	4,4	3,2	80	2/9/130+2/19/120+2/14/110	72	15°	GA	+
P2105022	PI-521VT	360	4,4	3,2	65	2/9/110	72	15°	GA	+
P2105023	PI-521VT	370	4,4	3,2	30	2/10/60+2/13/94+2/9/46+2/9,5/46,5+2/7/42	72	15°	GA	+
P2105111	PI-521VT	380	4,4	3,2	30	2/10/60+2/13/94+2/9/46+2/9,5/46,5+2/7/42	72	15°	GA	+

PI-521VT

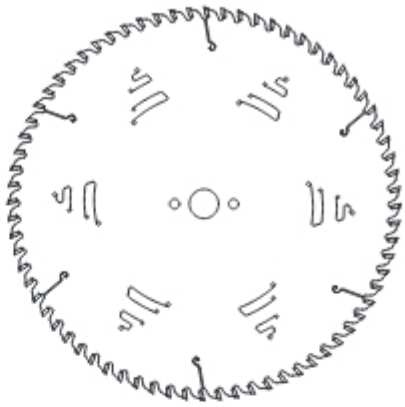



Catalogue number	Type	D mm	B mm	b mm	d mm	Driver holes	z	γ		
P2105024	PI-521VT	380	4,4	3,2	60	2/9/110+2/10/80+2/11/85+2/14/100+2/11/115+2/19/120+2/14/125+2/11/148	72	15°	GA	+
P2105025	PI-521VT	380	4,4	3,2	65	2/9/100+2/10/110	72	15°	GA	+
P2105026	PI-521VT	380	4,4	3,2	75	3/15/75+2/7/110	72	15°	GA	+
P2105027	PI-521VT	380	4,6	3,2	80	4/9/100+2/14/110	72	15°	GA	+
P2105028	PI-521VT	380	4,8	3,5	60	2/15/100+2/9/110+2/10/80+2/11/85+2/14/100+2/11/115+2/19/120+2/14/125+2/11/148	72	15°	GA	+
P2105029	PI-521VT	400	4,4	3,2	30	2/10/60+2/13/94+2/9/46+2/9,5/46,5+2/7/42+ 2/13/94	72	15°	GA	+
P2105030	PI-521VT	400	4,4	3,2	60	2/9/110+2/10/80+2/11/85+2/14/100+2/11/115+2/19/120+2/14/125+2/11/148	72	15°	GA	+
P2105031	PI-521VT	400	4,4	3,2	75	4/15/105+2/7/110	72	15°	GA	+
P2105032	PI-521VT	400	4,4	3,2	80	2/9/130+2/19/120+2/14/110	72	15°	GA	+
P2105033	PI-521VT	420	4,6	3,2	80	2/14/110+4/9/100	72	15°	GA	+
P2105034	PI-521VT	420	4,8	3,5	60	2/9/110+2/10/80+2/11/85+2/14/100+2/11/115+2/19/120+2/14/125+2/11/148	72	15°	GA	+
P2105110	PI-521VT	430	4,4	3,2	30	2/10/60+2/13/94+2/9/46+2/9,5/46,5+2/7/42	72	15°	GA	+
P2105035	PI-521VT	430	4,4	3,2	65	2/9/110	72	15°	GA	+
P2105036	PI-521VT	430	4,4	3,2	75	4/15/105+2/7/110	72	15°	GA	+
P2105037	PI-521VT	430	4,4	3,2	80	2/9/130+4/19/120+2/7/110+2/9/110+2/14/110+4/9/100	72	15°	GA	+
P2105038	PI-521VT	450	4,4	3,2	30	2/10/60+2/13/94+2/9/46+2/9,5/46,5+2/7/42	72	15°	GA	+
P2105039	PI-521VT	450	4,4	3,2	80	2/9/100+2/10/130+4/19/120+2/7/110+2/14/110+4/9/100	72	15°	GA	+
P2105040	PI-521VT	450	4,8	3,5	60	2/9/110+2/10/80+2/11/85+2/14/100+2/11/115+2/19/120+2/14/125+2/11/148	72	15°	GA	•
P2105041	PI-521VT	460	4,4	3,2	30	2/10/60+2/13/94+2/9/46+2/9,5/46,5+2/7/42	72	15°	GA	+
P2105042	PI-521VT	470	4,4	3,2	75	4/15/105	72	15°	GA	+
P2105060	PI-521VT	470	4,8	3,5	70	4/11/130	72	15°	GA	+
P2105043	PI-521VT	480	4,4	3,2	30	2/10/60+2/13/94+2/9/46+2/9,5/46,5+2/7/42	72	15°	GA	+
P2105044	PI-521VT	480	4,8	3,5	80	2/9/100+2/10/130+4/19/120+2/7/110+2/14/110+4/9/100	72	15°	GA	+
P2105045	PI-521VT	500	4,8	3,5	60	2/9/110+2/10/80+2/11/85+2/14/100+2/11/115+2/19/120+2/14/125+2/11/148	72	15°	GA	+

1

PI-521VS Premium



Super LongLife panel sizing saw blades with medium teeth number and group triple-chip (GA), type **PI-521VS Premium**, with super-extra hard carbide tips, designed for cutting chipboard, laminated board, MDF, HDF and other homogenous materials without impurities in stack.

The construction of the saw blade includes extra longlife type of carbide produced in nanotechnology with addition of chromium and nickel, which, together with new improved blade geometry, has substantially increased life of the saw blade.

Additionally, optimal tensioning as well as new type of noise-reduction cuts noticeably increase stiffness and stability of the saw blade which has a direct effect on life of the tool.

Type of cut: cross and longitudinal, in stack.
Material: chipboard, laminated board, MDF, HDF.







Catalogue number	Type	D mm	B mm	b mm	d mm	Driver holes	z	γ		
SP2105001	PI-521VS Premium	300	4,4	3,2	30	2/10/60+2/13/94+2/9/46+2/9,5/46,5+2/7/42	60	15°	GA	+
SP2105002	PI-521VS Premium	300	4,4	3,2	60	2/9/110+2/10/80+2/11/85+2/14/100+2/11/115+2/19/120+2/14/125+2/11/148	60	15°	GA	+
SP2105003	PI-521VS Premium	300	4,4	3,2	65	2/9/110	60	15°	GA	+
SP2105004	PI-521VS Premium	300	4,4	3,2	80	4/8,5/100+2/7/110+2/14/110	60	15°	GA	+
SP2105005	PI-521VS Premium	300	4,4	3,2	60	2/9/110+2/10/80+2/11/85+2/14/100+2/11/115+2/19/120+2/14/125+2/11/148	72	15°	GA	+
SP2105006	PI-521VS Premium	300	4,4	3,2	75	2/9/110	72	15°	GA	+
SP2105007	PI-521VS Premium	305	4,4	3,2	30	2/10/60+2/13/94+2/9/46+2/9,5/46,5+2/7/42	60	15°	GA	•
SP2105008	PI-521VS Premium	310	4,4	3,2	60	2/9/110+2/10/80+2/11/85+2/14/100+2/11/115+2/19/120+2/14/125+2/11/148	72	15°	GA	+
SP2105009	PI-521VS Premium	320	4,4	3,2	30	2/10/60+2/13/94+2/9/46+2/9,5/46,5+2/7/42	60	15°	GA	•
SP2105010	PI-521VS Premium	320	4,4	3,2	65	2/9/110+2/9/100	60	15°	GA	•
SP2105011	PI-521VS Premium	320	4,4	3,2	75	3/13/95	60	15°	GA	+
SP2105012	PI-521VS Premium	320	4,4	3,2	80	4/8,5/100+2/7/110+2/14/110	60	15°	GA	+
SP2105013	PI-521VS Premium	330	4,4	3,2	50	4/13/80	60	15°	GA	+
SP2105014	PI-521VS Premium	350	4,4	3,2	30	2/10/60+2/13/94+2/9/46+2/9,5/46,5+2/7/42	72	15°	GA	•
SP2105015	PI-521VS Premium	350	4,4	3,2	60	2/9/110+2/10/80+2/11/85+2/14/100+2/11/115+2/19/120+2/14/125+2/11/148	72	15°	GA	•
SP2105016	PI-521VS Premium	350	4,4	3,2	80	4/8,5/100+2/7/110+2/14/110	72	15°	GA	+
SP2105017	PI-521VS Premium	355	4,4	3,2	30	2/10/60+2/13/94+2/9/46+2/9,5/46,5+2/7/42	72	15°	GA	•
SP2105018	PI-521VS Premium	355	4,4	3,2	60	2/9/110+2/10/80+2/11/85+2/14/100+2/11/115+2/19/120+2/14/125+2/11/148	72	15°	GA	•
SP2105019	PI-521VS Premium	355	4,4	3,2	65	2/9/110+2/9/100	72	15°	GA	•
SP2105020	PI-521VS Premium	355	4,4	3,2	75	-	72	15°	GA	•
SP2105021	PI-521VS Premium	355	4,4	3,2	80	2/9/130+2/19/120+2/14/110	72	15°	GA	•
SP2105022	PI-521VS Premium	360	4,4	3,2	65	2/9/110	72	15°	GA	+
SP2105023	PI-521VS Premium	370	4,4	3,2	30	2/10/60+2/13/94+2/9/46+2/9,5/46,5+2/7/42	72	15°	GA	+
SP2105111	PI-521VS Premium	380	4,4	3,2	30	2/10/60+2/13/94+2/9/46+2/9,5/46,5+2/7/42	72	15°	GA	+
SP2105024	PI-521VS Premium	380	4,4	3,2	60	2/9/110+2/10/80+2/11/85+2/14/100+2/11/115+2/19/120+2/14/125+2/11/148	72	15°	GA	•
SP2105025	PI-521VS Premium	380	4,4	3,2	65	2/9/100+2/10/110	72	15°	GA	+
SP2105026	PI-521VS Premium	380	4,4	3,2	75	3/15/75+2/7/110	72	15°	GA	+
SP2105027	PI-521VS Premium	380	4,6	3,2	80	4/9/100+2/14/110	72	15°	GA	•

PI-521VS Premium

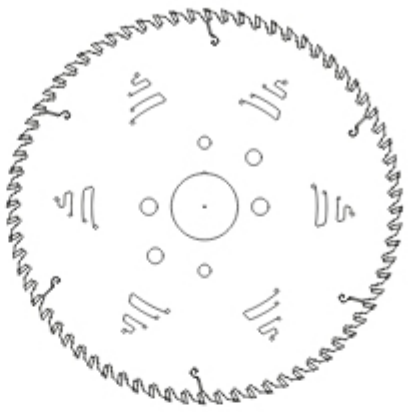



Catalogue number	Type	D mm	B mm	b mm	d mm	Driver holes	z	γ		
SP2105028	PI-521VS Premium	380	4,8	3,5	60	2/9/110+2/10/80+2/11/85+2/14/100+2/11/115+2/19/120+2/14/125+2/11/148	72	15°	GA	•
SP2105029	PI-521VS Premium	400	4,4	3,2	30	2/10/60+2/13/94+2/9/46+2/9,5/46,5+2/7/42+ 2/13/94	72	15°	GA	•
SP2105030	PI-521VS Premium	400	4,4	3,2	60	2/9/110+2/10/80+2/11/85+2/14/100+2/11/115+2/19/120+2/14/125+2/11/148	72	15°	GA	•
SP2105031	PI-521VS Premium	400	4,4	3,2	75	4/15/105+2/7/110	72	15°	GA	•
SP2105032	PI-521VS Premium	400	4,4	3,2	80	2/9/130+2/19/120+2/14/110	72	15°	GA	•
SP2105033	PI-521VS Premium	420	4,6	3,2	80	2/14/110+4/9/100	72	15°	GA	•
SP2105034	PI-521VS Premium	420	4,8	3,5	60	2/9/110+2/10/80+2/11/85+2/14/100+2/11/115+2/19/120+2/14/125+2/11/148	72	15°	GA	•
SP2105110	PI-521VS Premium	430	4,4	3,2	30	2/10/60+2/13/94+2/9/46+2/9,5/46,5+2/7/42	72	15°	GA	+
SP2105035	PI-521VS Premium	430	4,4	3,2	65	2/9/110	72	15°	GA	+
SP2105036	PI-521VS Premium	430	4,4	3,2	75	4/15/105+2/7/110	72	15°	GA	+
SP2105037	PI-521VS Premium	430	4,4	3,2	80	2/9/130+4/19/120+2/7/110+2/9/110+2/14/110+4/9/100	72	15°	GA	•
SP2105038	PI-521VS Premium	450	4,4	3,2	30	2/10/60+2/13/94+2/9/46+2/9,5/46,5+2/7/42	72	15°	GA	•
SP2105039	PI-521VS Premium	450	4,4	3,2	80	2/9/100+2/10/130+4/19/120+2/7/110+2/14/110+4/9/100	72	15°	GA	•
SP2105040	PI-521VS Premium	450	4,8	3,5	60	2/9/110+2/10/80+2/11/85+2/14/100+2/11/115+2/19/120+2/14/125+2/11/148	72	15°	GA	•
SP2105041	PI-521VS Premium	460	4,4	3,2	30	2/10/60+2/13/94+2/9/46+2/9,5/46,5+2/7/42	72	15°	GA	•
SP2105042	PI-521VS Premium	470	4,4	3,2	75	4/15/105	72	15°	GA	+
SP2105060	PI-521VS Premium	470	4,8	3,5	70	4/11/130	72	15°	GA	+
SP2105043	PI-521VS Premium	480	4,4	3,2	30	2/10/60+2/13/94+2/9/46+2/9,5/46,5+2/7/42	72	15°	GA	•
SP2105044	PI-521VS Premium	480	4,8	3,5	80	2/9/100+2/10/130+4/19/120+2/7/110+2/14/110+4/9/100	72	15°	GA	+
SP2105045	PI-521VS Premium	500	4,8	3,5	60	2/9/110+2/10/80+2/11/85+2/14/100+2/11/115+2/19/120+2/14/125+2/11/148	72	15°	GA	+
SP2105046	PI-521VS Premium	520	4,8	3,5	60	2/9/110+2/10/80+2/11/85+2/14/100+2/11/115+2/19/120+2/14/125+2/11/148	72	18°	GA	•
SP2105047	PI-521VS Premium	520	4,8	3,5	70	4/11/130	72	18°	GA	+
SP2105061	PI-521VS Premium	570	4,8	3,5	60	2/19/120+2/11/115	60	18°	GA	•
SP2105048	PI-521S Premium	600	5,8	4,0	60	2/9/110+2/10/80+2/11/85+2/14/100+2/11/115+2/19/120+2/14/125+2/11/148	72	18°	GA	•
SP2105049	PI-521S Premium	620	6,2	4,0	40	2/13/115+2/13/140	60	18°	GA	+
SP2105050	PI-521S Premium	670	5,8	4,5	60	2/9/110+2/10/80+2/11/85+2/14/100+2/11/115+2/19/120+2/14/125+2/11/148	60	18°	GA	•
SP2105051	PI-521S Premium	720	6,5	4,5	40	2/14/114+2/14/140	60	18°	GA	+
SP2105052	PI-521S Premium	730	6,2	4,5	60	2/9/110+2/10/80+2/11/85+2/14/100+2/11/115+2/19/120+2/14/125+2/11/148	60	18°	GA	•

1

PI-521V NG



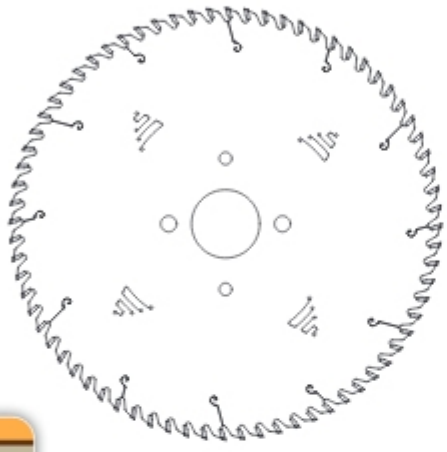

The New Generation of saw blades, **PI-521V NG** has been equipped with a new type of carbide tip. Superblade, **PI-521V NG** (**N**ew **G**eneration) is designed for cutting multiple compact-type board, HDF, MDF, laminated board, chipboard and other homogenous materials.

The design of the blades includes super longlife carbide type produced in nanotechnology process with optimal chromium and nickel additions. It allows for obtaining high hardness with increased resistance to micro-chipping during work. The cutting surface retains its properties longer and is more resistant to breaking.

Super longlife carbide together with a new process of the saw blade's body production, have significantly increased its life. As a result, the blade's life has increased 2 up to 3 times, retaining the high quality of cutting during the whole life span of the blade.

Type of cut: cross and longitudinal, in stack.

Material: chipboard, laminated board, MDF, HDF.







Catalogue number	Type	D mm	B mm	b mm	d mm	Driver holes	z	Y		
SP2102100	PI-521V NG	305	4,4	3,2	30	2/10/60	60	15°	GA/GA	+
SP2102101	PI-521V NG	320	4,4	3,2	30	2/10/60 + 2/7/42 + 2/9,5/46,5 + 2/13/94	60	15°	GA/GA	+
SP2102102	PI-521V NG	320	4,4	3,2	65	2/9/100 + 2/9/110	60	15°	GA/GA	+
SP2102103	PI-521V NG	350	4,4	3,2	30	2/10/60	72	15°	GA/GA	+
SP2102104	PI-521V NG	350	4,4	3,2	60	2/15/100	72	15°	GA/GA	+
SP2102105	PI-521V NG	350	4,4	3,2	75	-	72	15°	GA/GA	+
SP2102106	PI-521V NG	350	4,4	3,2	80	2/9/130 + 2/19/120 + 2/14/110	72	15°	GA/GA	+
SP2102107	PI-521V NG	380	4,4	3,2	60	2/15/100+2/11/115+2/14/125	72	15°	GA/GA	+
SP2102108	PI-521V NG	380	4,8	3,5	60	2/15/100+2/11/115+2/14/125	72	15°	GA/GA	+
SP2102109	PI-521V NG	400	4,4	3,2	30	2/10/60	72	15°	GA/GA	+
SP2102110	PI-521V NG	400	4,4	3,2	60	2/14/100	72	15°	GA/GA	+
SP2102111	PI-521V NG	420	4,6	3,2	80	2/14/110 + 4/9/100	72	15°	GA/GA	+
SP2102112	PI-521V NG	450	4,4	3,2	30	2/10/60	72	15°	GA/GA	+
SP2102113	PI-521V NG	450	4,4	3,2	60	2/14/125+2/10/80 + 2/17/100	72	15°	GA/GA	+
SP2102114	PI-521V NG	450	4,4	3,2	80	2/9/100 + 2/10/130 + 4/19/120 + 2/7/110	72	15°	GA/GA	+
SP2102115	PI-521V NG	450	4,8	3,5	80	2/9/100 + 2/10/130 + 4/19/120 + 2/7/110	72	15°	GA/GA	+
SP2102116	PI-521V NG	450	4,8	3,5	60	2/14/125 + 2/10/80 + 2/17/100	72	15°	GA/GA	+
SP2102117	PI-521V NG	460	4,4	3,2	30	2/10/60 +2/13/94	72	15°	GA/GA	+

PI-405

PI-405T

Set of adjustable scoring saw blades with flat teeth (GM), type **PI-405T** with very hard carbide tips (T), designed for scoring chipboard, laminated board, laminates, LDF and MDF on manual formatting machines and automatic lines.

Type of cut: concurrent scoring.

Material: chipboard, laminated board, MDF, plywood.

PI-405S

Set of increased life, adjustable scoring saw blades with flat teeth (GM), type **PI-405S** with super hard carbide tips (S), designed for scoring chipboard, laminated board, LDF, MDF and other homogenous materials on manual formatting machines and automatic lines.

Type of cut: scoring.

Material: chipboard, laminated board, MDF, HDF.

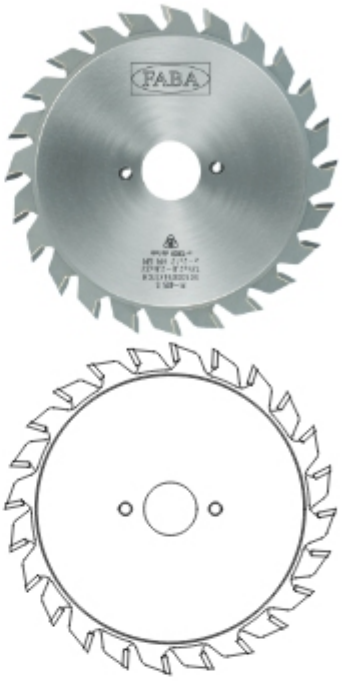

Adjusting is made
by spacers as following:



0,05 mm - 1 pc
0,1 mm - 1 pc
0,2 mm - 2 pcs
0,3 mm - 1 pc

PI-405T



PI-405S







Catalogue number	Type	D mm	B_1/B_2 mm	b mm	d mm		z	γ		
S0501001	PI-405S	80	2,8/3,6	1,0-2,2	20		2x10	12°	GM	•
S0501002	PI-405T	100	2,8/3,6	1,0-2,2	20		2x12	12°	GM	•
S0501003	PI-405T	100	2,8/3,6	1,0-2,2	22		2x12	12°	GM	•
S0501004	PI-405S	100	2,8/3,6	1,0-2,2	20		2x12	12°	GM	•
S0501005	PI-405S	100	2,8/3,6	1,0-2,2	22		2x12	12°	GM	•
S0501006	PI-405T	120	2,8/3,6	1,0-2,2	20		2x12	12°	GM	•
S0501007	PI-405T	120	2,8/3,6	1,0-2,2	22		2x12	12°	GM	•
S0500059	PI-405T	120	2,8/3,6	1,0-2,2	50	4/6,4/62	2x12	12°	GM	+
S0501008	PI-405S	120	2,8/3,6	1,0-2,2	20		2x12	12°	GM	•
S0501009	PI-405S	120	2,8/3,6	1,0-2,2	22		2x12	12°	GM	•
S0500216	PI-405S	120	2,8/3,6	1,0-2,2	50	4/6,4/62	2x12	12°	GM	+
S0501010	PI-405T	125	2,8/3,6	1,0-2,2	20		2x12	12°	GM	•
S0501011	PI-405T	125	2,8/3,6	1,0-2,2	22		2x12	12°	GM	•
S0501012	PI-405S	125	2,8/3,6	1,0-2,2	20		2x12	12°	GM	•
S0501013	PI-405S	125	2,8/3,6	1,0-2,2	22		2x12	12°	GM	•

Set of spacer rings for the tool

Catalogue number	Name	D (mm)	d (mm)	The set includes - spacer rings	
WHAP08160	Set of spacer rings	100 / 120 / 125	20 / 22	0,05x1; 0,1x1; 0,2x2; 0,3x1	•

1

PI-408T



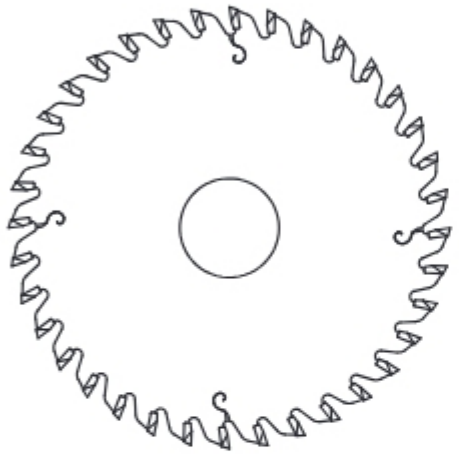

Scoring saw blades with conical-flat (GR/GM) or conical--alternate bevel teeth (GR/GS), type **PI-408T** with very hard carbide tips (T), designed for scoring chipboard, laminated board, LDF and MDF on manual formatting machines and automatic lines.

Type of cut: scoring.

Material: plywood, chipboard, laminated board, MDF.









Catalogue number	Type	D mm	B_1/B_2 mm	b mm	d mm	z		
S0800600	PI-408T	100	3,1/4,3	2,5	20	24	GR/GM	•
S0800601	PI-408T	100	3,1/4,3	2,5	22	24	GR/GM	•
S0800249	PI-408T	120	3,1/4,3	2,5	20	24	GR/GM	+
S0800002	PI-408T	125	2,8/3,6	2,2	20	24	GR/GM	•
S0801600	PI-408T	125	2,8/3,6	2,2	20	24	GR/GS	+
S0800014	PI-408T	125	3,1/4,3	2,5	20	24	GR/GM	•
S0801601	PI-408T	125	3,1/4,3	2,5	20	24	GR/GS	•
S0800602	PI-408T	125	3,1/4,3	2,5	22	24	GR/GM	•
S0801602	PI-408T	125	3,1/4,3	2,5	22	24	GR/GS	•
S0800402	PI-408T	200	6,2/7,2	4,5	45	36	GR/GS	•

PI-408S

Increased life scoring saw blades with conical-flat (GR/GM) or conical-alternate bevel teeth (GR/GS), type **PI-408S** with super hard carbide tips (S), designed for scoring chipboard, laminated board, MDF and HDF and other homogenous materials on manual formatting machines and automatic lines.

Type of cut: scoring.

Material: chipboard, laminated board, MDF, HDF.











Catalogue number	Type	D mm	B_1/B_2 mm	b mm	d mm	Driver holes	z		
S0800341	PI-408S	100	3,2/4,3	2,5	22	-	24	GR/GM	•
S0800272	PI-408S	125	2,8/3,6	2,2	20	-	24	GR/GM	•
S0801603	PI-408S	125	2,8/3,6	2,2	20	-	24	GR/GS	+
S0800435	PI-408S	125	2,8/3,6	2,2	22	-	24	GR/GM	•
S0801604	PI-408S	125	2,8/3,6	2,2	22	-	24	GR/GS	+
S0800507	PI-408S	125	3,0/4,0	2,5	20	-	24	GR/GM	•
S0801605	PI-408S	125	3,0/4,0	2,5	20	-	24	GR/GS	+
S0800655	PI-408S	125	3,0/4,0	2,5	22	-	24	GR/GM	•
S0801606	PI-408S	125	3,0/4,0	2,5	22	-	24	GR/GS	+
S0800348	PI-408S	125	3,1/4,3	2,5	20	-	24	GR/GM	•
S0801607	PI-408S	125	3,1/4,3	2,5	20	-	24	GR/GS	•
S0800350	PI-408S	125	3,1/4,3	2,5	22	-	24	GR/GM	•
S0801608	PI-408S	125	3,1/4,3	2,5	22	-	24	GR/GS	•
S0802001	PI-408S	125	4,4/5,4	3,2	45	-	24	GR/GM	+
S0801616	PI-408S	125	4,4/5,4	3,2	45	-	24	GR/GS	+
S0800924	PI-408S	160	4,4/5,6	3,2	45	3/11/70	36	GR/GS	+
S0800617	PI-408S	160	4,4/5,6	3,2	55	3/7/66 + 3/9/72	36	GR/GS	•
S0802002	PI-408S	160	4,6/5,6	3,2	55	3/7/66 + 3/9/72	36	GR/GS	+
S0802003	Pi-408S	180	4,4/5,4	3,2	30	2/10/60 + 2/7/42	36	GR/GS	•
S0802004	PI-408S	180	4,4/5,4	3,2	45	-	36	GR/GS	•
S0800419	PI-408S	180	4,8/5,8	3,5	45	-	36	GR/GS	•
S0802005	PI-408S	200	4,4/5,4	3,2	20	2/11/66	36	GR/GS	•
S0802006	PI-408S	200	4,4/5,4	3,2	30	2/10/60	36	GR/GS	•
S0802007	PI-408S	200	4,4/5,4	3,2	45	-	36	GR/GS	•
S0802008	PI-408S	200	4,4/5,4	3,2	65	2/10/110 + 2/10/100	36	GR/GS	•
S0802009	PI-408S	200	4,4/5,4	3,2	80	2/14/110	36	GR/GS	•
S0800606	PI-408S	200	4,8/5,8	3,5	45	-	36	GR/GS	•
S0801358	PI-408S	200	4,8/5,8	3,5	65	2/10/110 + 2/10/100	36	GR/GS	+
S0801478	PI-408S	200	5,8/6,8	4,0	20	-	36	GR/GS	+
S0800722	PI-408S	200	5,8/6,8	4,0	45	-	36	GR/GS	•
S0801019	PI-408S	215	4,4/5,4	3,2	50	3/15/80 + 2/7/80	42	GR/GS	+
S0801479	PI-408S	300	4,4/5,4	3,2	50	3/15/80	48	GR/GS	+

1

PI-530



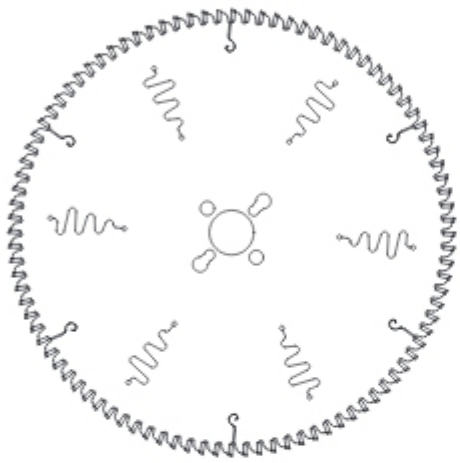

Saw blades with medium and high teeth number and triple-chip + flat teeth (GA), type **PI-530** with special carbide tips, designed for precise cutting of profiles and thin light alloy and plastics sheets on manual feed machines and automatic lines.
Special laser cuts (V) reduce the noise by about a half.

Type of cut: cross and longitudinal.

Material: light alloys and plastics.





Catalogue number	Type	D mm	B mm	b mm	d mm	Driver holes	z	γ		
P3000654	PI-530	200	2,2	1,6	32	-	100	-6°	GA	•
P3000181	PI-530	216	3,2	2,6	30	2/10/60	64	-6°	GA	•
P3000450	PI-530	250	2,6	2,0	30	2/10/60 + 2/7/42 + 2/9,5/46,5	100	-6°	GA	•
P3000001	PI-530	250	3,2	2,6	30	2/10/60 + 2/7/42 + 2/9,5/46,5	60	-6°	GA	•
P3000002	PI-530	250	3,2	2,6	30	2/10/60 + 2/7/42 + 2/9,5/46,5	80	-6°	GA	•
P3000003	PI-530	300	3,2	2,6	30	2/10/60 + 2/7/42 + 2/9,5/46,5	72	-6°	GA	•
P3000051	PI-530V	300	3,2	2,6	30	2/10/60 + 2/7/42 + 2/9,5/46,5	96	-6°	GA	•
P3000382	PI-530	300	3,2	2,6	32	2/12/64	96	-6°	GA	•
P3000114	PI-530	330	3,2	2,6	30	2/10/60 + 2/7/42 + 2/9,5/46,5	102	-6°	GA	•
P3000005	PI-530	350	3,8	3,2	30	2/10/60 + 2/7/42 + 2/9,5/46,5	84	-6°	GA	•
P3000006	PI-530	350	3,8	3,2	30	2/10/60 + 2/7/42 + 2/9,5/46,5	108	-6°	GA	•
P3000043	PI-530	350	3,8	3,2	32	2/10/60	108	-6°	GA	•
P3000007	PI-530	400	3,8	3,2	30	2/10/60 + 2/7/42 + 2/9,5/46,5	96	-6°	GA	•
P3000008	PI-530	400	3,8	3,2	30	2/10/60	120	-6°	GA	•
P3000392	PI-530	400	3,8	3,2	32	2/12/64	96	-6°	GA	•
P3000314	PI-530	400	3,8	3,2	32	2/12/64	120	-6°	GA	•
P3000377	PI-530	500	4,6	4,0	30	2/10/60 + 2/10/70	120	-6°	GA	•

PI-530 Premium

PI-530 Premium type saw blades with increased life, stiffness and body stability designed for precise longitudinal and cross cutting of solid materials from light alloys and plastics, working on manual feed machines and automatic lines.
PI-530 type saw blades with high number of group triple chip + flat (GA) teeth and special carbide tips.

Type of cut: single, cross and longitudinal.

Material: light alloys and plastics.



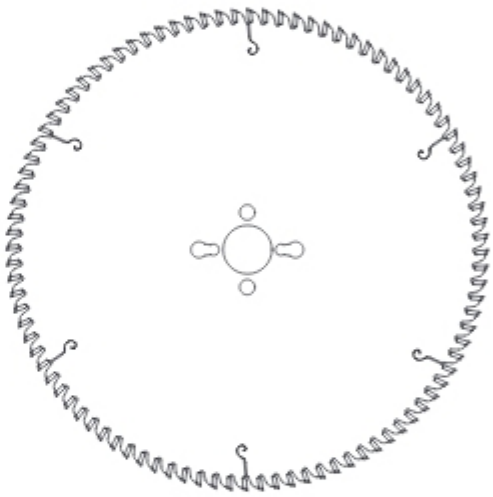







Cat. num.	Type	D mm	B mm	b mm	d mm	Driver holes	z	γ		
SP3006006	PI-530V Premium	300	3,2	2,6	30	2/10/60 + 2/7/42 + 2/9,5/46,5	72	-6°	GA	•
SP3006007	PI-530V Premium	300	3,2	2,6	30	2/10/60 + 2/7/42 + 2/9,5/46,5	96	-6°	GA	•
SP3006009	PI-530V Premium	300	3,2	2,6	32	2/12/64	96	-6°	GA	•
SP3006013	PI-530 Premium	350	3,6	3,0	30	2/10/60 + 2/7/42 + 2/9,5/46,5	108	-6°	GA	•
SP3006014	PI-530 Premium	350	3,6	3,0	32	2/10/63 + 2/10/60	108	-6°	GA	•
SP3006018	PI-530 Premium	400	3,6	3	30	2/10/60 + 2/7/42 + 2/9,5/46,5	96	-6°	GA	•
SP3006019	PI-530 Premium	400	3,6	3	32	2/10/60 + 2/12/64	96	-6°	GA	•
SP3006020	PI-530 Premium	400	3,6	3	30	2/10/60 + 2/7/42 + 2/9,5/46,5 +2/11/70	120	-6°	GA	•
SP3006021	PI-530 Premium	400	3,6	3	32	2/10/60 + 2/12/64	120	-6°	GA	•
SP3006026	PI-530 Premium	420	3,8	3,2	30	2/10/60 + 2/7/42 + 2/9,5/46,5	96	-6°	GA	•
SP3006029	PI-530 Premium	450	4,2	3,5	30	2/10/60 + 2/7/42 + 2/9,5/46,5	102	-6°	GA	•
SP3006030	PI-530 Premium	450	4,2	3,5	30	2/10/60 + 2/7/42 + 2/9,5/46,5	120	-6°	GA	•
SP3006033	PI-530 Premium	500	4,2	3,5	30	2/10/60 + 2/7/42 + 2/9,5/46,5 + 2/11/70	120	-6°	GA	•
SP3006034	PI-530 Premium	500	4,4	3,8	30	2/10/60 + 2/7/42 + 2/9,5/46,5 + 2/11/70	120	-6°	GA	+
SP3006038	PI-530 Premium	550	4,4	3,8	30	2/10/60 + 2/7/42 + 2/9,5/46,5 + 2/11/70	132	-6°	GA	•

PI-531



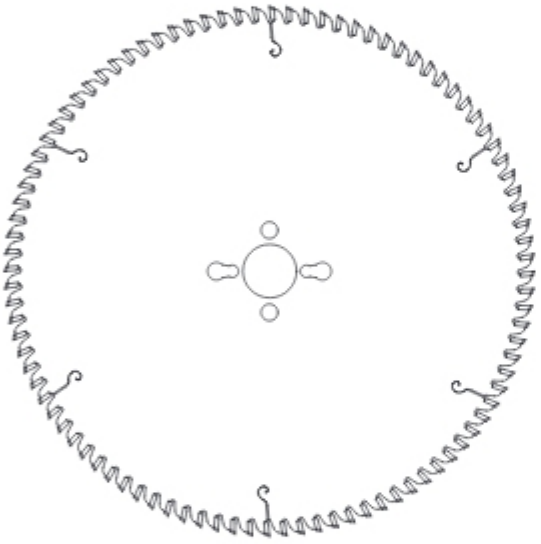

Saw blades with high teeth number and triple-chip + flat teeth (GA), type **PI-531** with special carbide tips, designed for precise cutting of solid materials from light alloys and plastics on automatic feed machines.

Type of cut: cross and longitudinal.

Material: light alloys and plastics.

AL PCV GA HM

Catalogue number	Type	D mm	B mm	b mm	d mm	Driver holes	z	γ		
P3100002	PI-531	250	3,2	2,6	30	2/10/60 + 2/7/42 + 2/9,5/46,5	80	5°	GA	•
P3100004	PI-531	300	3,2	2,6	30	2/10/60 + 2/7/42 + 2/9,5/46,5	96	5°	GA	•
P3100005	PI-531	330	3,2	2,6	30	2/10/60 + 2/7/42 + 2/9,5/46,5	102	5°	GA	+
P3100007	PI-531	350	3,2	2,6	30	2/10/60 + 2/7/42 + 2/9,5/46,5	108	5°	GA	•
P3100008	PI-531	400	3,8	3,2	30	2/10/60 + 2/7/42 + 2/9,5/46,5	96	5°	GA	•
P3101250	PI-531	500	4,0	3,4	30	2/10/60 + 2/10,5/70	120	5°	GA	+
P3102105	PI-531	500	4,0	3,4	32	2/12/64	120	5°	GA	+

PI-531 Premium

PI-531 Premium type saw blades with increased life, stiffness and body stability designed for precise longitudinal and cross cutting of solid materials from light alloys and plastics, working on manual feed machines and automatic lines.
PI-531 type saw blades with high number of group triple chip + flat (GA) teeth and special carbide tips.

Type of cut: single, cross and longitudinal.

Material: light alloys and plastics.



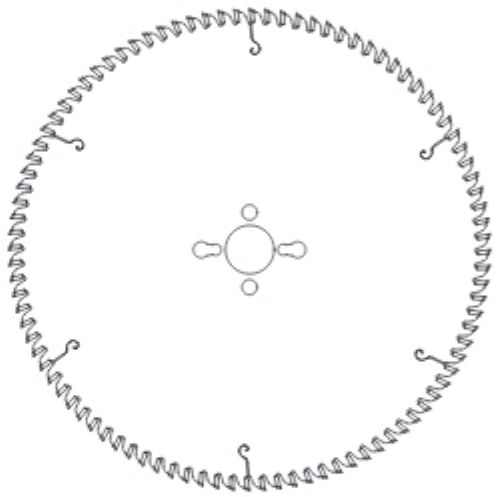







Cat. num.	Type	D mm	B mm	b mm	d mm	Driver holes	z	γ		
SP3106007	PI-531V Premium	300	3,2	2,6	30	2/10/60 + 2/7/42 + 2/9,5/46,5	96	5°	GA	•
SP3106009	PI-531V Premium	300	3,2	2,6	32	2/12/64	96	5°	GA	•
SP3106011	PI-531 Premium	350	3,2	2,6	30	2/10/60 + 2/7/42 + 2/9,5/46,5	108	5°	GA	•
SP3106012	PI-531 Premium	350	3,2	2,6	32	2/10/63 + 2/10/60	108	5°	GA	•
SP3106023	PI-531 Premium	400	3,8	3,2	30	2/10/60 + 2/7/42 + 2/9,5/46,5	96	5°	GA	•
SP3106026	PI-531 Premium	420	3,8	3,2	30	2/10/60 + 2/7/42 + 2/9,5/46,5	96	5°	GA	•
SP3106027	PI-531 Premium	450	4	3,4	30	2/10/60 + 2/7/42 + 2/9,5/46,5	102	5°	GA	•
SP3106028	PI-531 Premium	450	4	3,4	30	2/10/60 + 2/7/42 + 2/9,5/46,5	120	5°	GA	•
SP3106031	PI-531 Premium	500	4	3,4	30	2/10/60 + 2/7/42 + 2/9,5/46,5	120	5°	GA	•
SP3106032	PI-531 Premium	500	4	3,4	32	2/11/60 + 2/11/70	120	5°	GA	•
SP3106034	PI-531 Premium	500	4,4	3,8	30	2/10/60 + 2/7/42 + 2/9,5/46,5	120	5°	GA	+
SP3106036	PI-531 Premium	550	4	3,4	30	2/10/60 + 2/7/42 + 2/9,5/46,5 +2/11/70	132	5°	GA	•
SP3106037	PI-531 Premium	550	4	3,4	32	2/11/60 + 2/11/70	132	5°	GA	•

1

PI-535

Saw blades with top bevel teeth (GSM), type **PI-535** with special carbide tips, designed for precise cutting of steel, non-ferrous metals, sandwich panels and others.

Type of cut: cross and longitudinal.

Material: steel, non-ferrous metals, sandwich panels, copper alloys, pipes, profiles, angle bars, flat bars, cable closures, metal sheets.



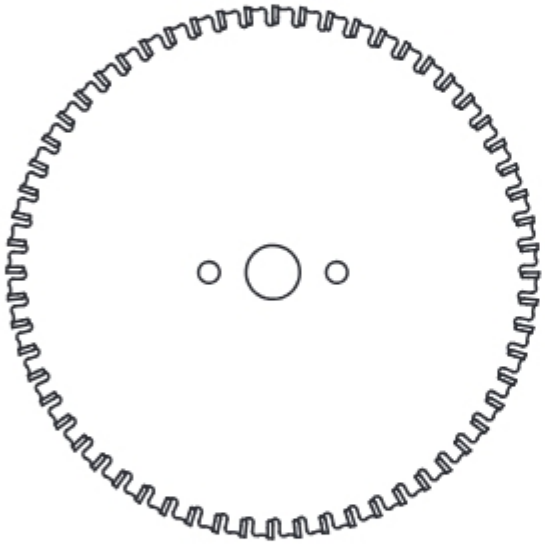

GSM

HM

Catalogue number	Type	D mm	B mm	b mm	d mm	Driver holes	z	n_{max}	γ		
P3500023	PI-535	235	2,2	1,8	30	2/10/60 + 2/7/42 + 2/9,5/46,5	48	1800	0°	GSM	+
P3500001	PI-535	250	2,2	1,8	25,4	2/10/60	60	1800	0°	GSM	+
P3500002	PI-535	250	2,2	1,8	30	2/10/60 + 2/7/42 + 2/9,5/46,5	60	1800	0°	GSM	•
P3500003	PI-535	300	2,2	1,8	25,4	2/10/60	60	1500	0°	GSM	+
P3500004	PI-535	300	2,2	1,8	30	2/10/60 + 2/7/42 + 2/9,5/46,5	60	1500	0°	GSM	+
P3500005	PI-535	300	2,2	1,8	25,4	2/10/60	80	1500	0°	GSM	+
P3500006	PI-535	300	2,2	1,8	30	2/10/60 + 2/7/42 + 2/9,5/46,5	80	1500	0°	GSM	+
P3500007	PI-535	350	2,4	2,0	25,4	2/10/60	96	1500	0°	GSM	+
P3500008	PI-535	350	2,4	2,0	30	2/10/60 + 2/7/42 + 2/9,5/46,5	96	1500	0°	GSM	+

PI-550 EVO2

Saw blades with small teeth number and flat teeth with chamfers on both sides (GAM), type **PI-550 EVO2** with carbide tips, designed for cutting gypsum-plaster boards, construction boards, solid wood contaminated with sand, concrete, ferrous intrusions.
Special body coating technology prevents the resin from sticking to the blade and reduces the blade-wood friction.

Type of cut: cross and longitudinal.

Material: gypsum-plaster boards, construction boards, solid wood, contaminated wood-based materials.



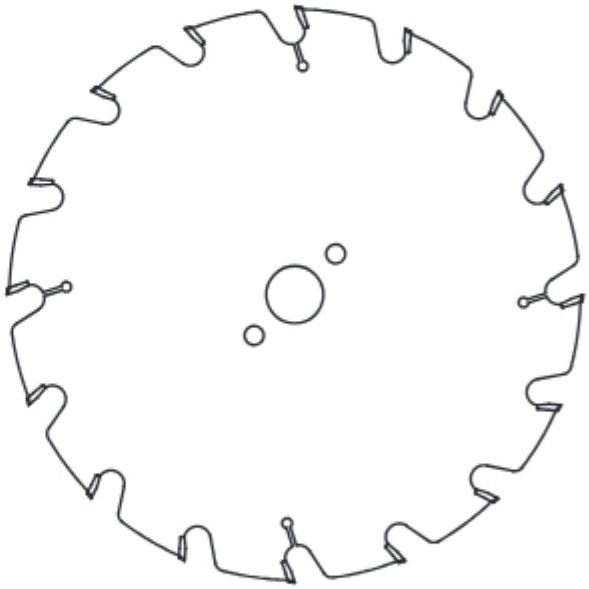

EVOLUTION 2

HM

GAM

K-G

BUD

Catalogue number	Type	D mm	B mm	b mm	d mm	Driver holes	z	γ		
P5000001-2	PI-550 EVO2	300	3,2	2,1	30	2/10/60 + 2/7/42 + 2/9,5/46,5	16	18°	GAM	•
P5000002-2	PI-550 EVO2	350	3,5	2,5	30	2/10/60 + 2/7/42 + 2/9,5/46,5	20	18°	GAM	•
P5000003-2	PI-550 EVO2	400	3,8	2,8	30	2/10/60	24	18°	GAM	•
P5000004-2	PI-550 EVO2	450	4,0	3,0	30	2/10/60	28	18°	GAM	•
P5000005-2	PI-550 EVO2	500	4,0	3,0	30	2/10/60	32	18°	GAM	•

1

PI-401 EVO2

Scoring saw blades with flat teeth (GM) and alternate top bevel teeth (GS), type **PI-401 EVO2** with carbide tips, designed for scoring and grooving in solid wood on manual formatting machines and automatic lines.
Special body coating technology prevents the resin from sticking to the blade and reduces the blade-wood friction.

Type of cut: scoring, grooving.

Material: solid wood.



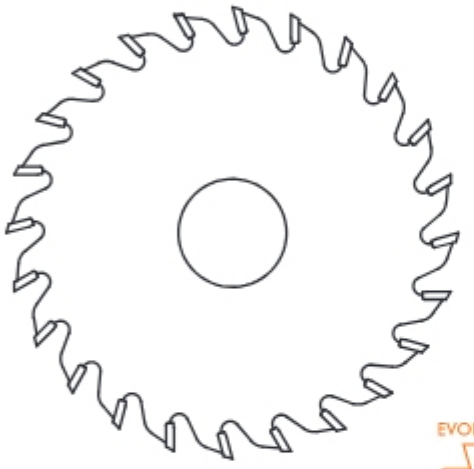

EVOLUTION 2

GM

GS

HM

Catalogue number	Type	D mm	B mm	b mm	d mm	z	γ		
S0100002	PI-401 EVO2	100	3,2	2,2	30	18	15°	GS	•
S0100004	PI-401 EVO2	100	3,4	2,2	22	18	15°	GS	•
S0100003	PI-401 EVO2	100	3,4	2,2	30	18	15°	GS	•
S0100005	PI-401 EVO2	100	4,0	3,0	30	18	15°	GM	•
S0100010	PI-401 EVO2	125	2,5	1,8	30	12	15°	GS	•
S0100011	PI-401 EVO2	125	3,0	2,0	30	12	15°	GS	•
S0100013	PI-401 EVO2	125	3,2	2,2	30	12	15°	GS	•
S0100023	PI-401 EVO2	125	3,4	2,2	30	24	15°	GS	•
S0100025	PI-401 EVO2	125	3,4	2,2	30	36	10°	GS	•
S0100018	PI-401 EVO2	125	4,0	3,0	30	12	15°	GM	•
S0100052	PI-401 EVO2	125	4,0	3,0	30	24	15°	GM	•
S0100019	PI-401 EVO2	125	5,0	3,5	30	12	15°	GM	•
S0100020	PI-401 EVO2	125	6,0	4,0	30	12	15°	GM	•
S0100021	PI-401 EVO2	125	8,0	5,0	30	12	15°	GM	•

PI-401

PI-401T

Scoring saw blades type **PI-401T** with very hard carbide tips (T), designed for scoring and grooving in boards on manual formatting machines and automatic lines.

Type of cut: scoring, grooving.

Material: plywood, chipboard, laminated board, MDF.



PI-401S

Increased life scoring saw blades type **PI-401S** with super hard carbide tips (S), designed for scoring and grooving in boards and homogenous materials without impurities on manual formatting machines and automatic lines.

Type of cut: scoring, grooving.

Material: chipboard, laminated board, MDF, HDF.

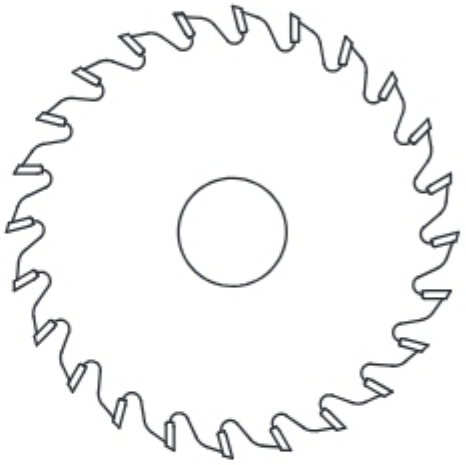

PI-401T



PI-401S







Catalogue number	Type	D mm	B mm	b mm	d mm	z	γ		
S0100717	PI-401T	125	3,2	2,2	20	36	10°	GS	•
S0100850	PI-401T	125	3,2	2,2	30	36	10°	GS	•
S0100263	PI-401T	125	3,4	2,2	20	24	15°	GS	•
S0100200	PI-401T	125	3,4	2,2	20	36	10°	GS	•
S0100673	PI-401S	125	3,4	2,2	20	36	10°	GS	•
S0100596	PI-401T	125	3,4	2,2	22	36	10°	GS	•
S0101288	PI-401S	125	3,4	2,2	22	36	10°	GS	•

1

PI-402 EVO2



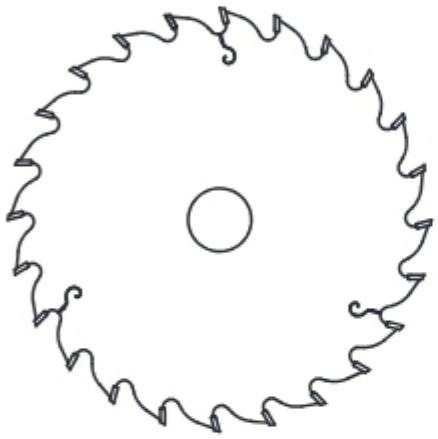

Scoring saw blades with flat teeth (GM) and alternate top bevel teeth (GS), type **PI-402 EVO2** with carbide tips, designed for scoring and grooving in solid wood on manual formatting machines and automatic lines.
Special body coating technology prevents the resin from sticking to the blade and reduces the blade-wood friction.

Type of cut: scoring, grooving, splitting.

Material: solid wood.



EVOLUTION 2



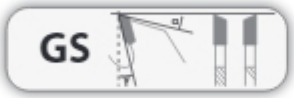



Catalogue number	Type	D mm	B mm	b mm	d mm	z	γ		
S0200001	PI-402 EVO2	150	2,8	2,0	30	24	15°	GS	•
S0200002	PI-402 EVO2	150	3,0	2,0	30	36	10°	GS	•
S0200003	PI-402 EVO2	150	3,2	2,2	30	36	10°	GS	•
S0200232	PI-402 EVO2	150	3,2	2,2	40	36	10°	GS	•
S0200004	PI-402 EVO2	150	3,4	2,2	30	36	10°	GS	•
S0200006	PI-402 EVO2	150	4,0	3,0	30	36	10°	GM	•
S0200011	PI-402 EVO2	160	3,2	2,2	30	36	10°	GS	•
S0201855	PI-402 EVO2	200	3,0	2,0	40	24	15°	GS	•
S0200014	PI-402 EVO2	200	3,2	2,2	30	24	15°	GS	•
S0200015	PI-402 EVO2	200	3,2	2,2	30	36	15°	GS	•
S0200249	PI-402 EVO2	200	3,2	2,2	40	36	15°	GS	+
S0200077	PI-402 EVO2	200	4,0	3,0	30	48	15°	GS	•

PI-402

PI-402T

Scoring saw blades type **PI-402T** with very hard carbide tips (T), designed for scoring, grooving and cutting boards on manual formatting machines and automatic lines.

Type of cut: scoring, grooving, splitting.

Material: plywood, chipboard, laminated board, MDF.

PI-402S

Increased life scoring saw blades type **PI-402S** with super hard carbide tips (S), designed for scoring, grooving and cutting boards and homogenous materials without impurities on manual formatting machines and automatic lines.

Type of cut: scoring, grooving, splitting.

Material: chipboard, laminated board, MDF, HDF.



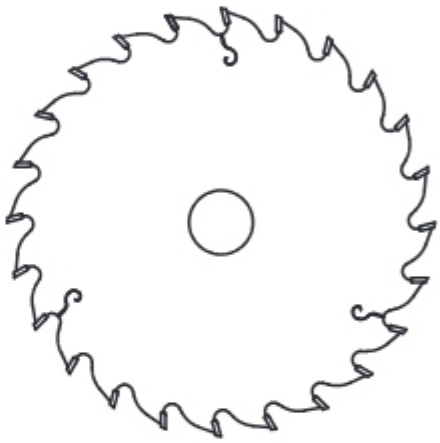

PI-402T



PI-402S









Catalogue number	Type	D mm	B mm	b mm	d mm	z	γ		
S0200031	PI-402T	150	3,2	2,2	30	36	10°	GS	•
S0201043	PI-402T	150	4,0	3,0	30	36	10°	GM	•
S0200697	PI-402S	150	4,0	3,0	30	36	10°	GM	•
S0203575	PI-402T	150	5,0	3,5	30	36	10°	GM	•
S0201799	PI-402T	150	6,0	4,0	30	36	10°	GM	•
S0200243	PI-402T	150	8,0	5,0	30	36	10°	GM	•
S0201110	PI-402T	200	3,0	2,0	30	48	15°	GS	•
S0200516	PI-402T	200	3,2	2,2	30	48	15°	GS	•
S0201124	PI-402T	200	3,2	2,2	30	60	10°	GS	•

1

PI-403



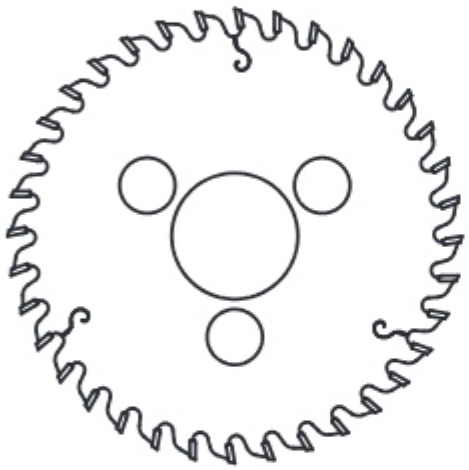

PI-403T

Scoring saw blades with flat teeth (GM), type **PI-403T** with very hard carbide tips (T), designed for cutting boards on automatic lines with pneumatic clamping systems.

Type of cut: cross and longitudinal.

Material: plywood, chipboard, laminated board, MDF.

PI-403S

Increased life scoring saw blades with flat teeth (GM), type **PI-403S** with super hard carbide tips (T), designed for cutting boards and homogenous materials without impurities on automatic lines with pneumatic clamping systems.

Type of cut: cross and longitudinal.

Material: chipboard, laminated board, MDF, HDF.

PI-403T



PI-403S







Catalogue number	Type	D mm	B mm	b mm	d mm	Driver holes	z	γ		
S0300001	PI-403T	180	3,2	2,2	50	3/22/80	36	10°	GM	+
S0300002	PI-403T	180	3,2	2,2	50	3/22/80	48	10°	GM	+
S0300029	PI-403S	180	3,2	2,2	50	3/22/80	48	10°	GM	+
S0300005	PI-403T	200	3,2	2,2	50	3/22/80	60	10°	GM	+

Special saw blades

Thin saw blades designed for 2-spindle automatic splitting lines and special saw blades, rings and hogger segments designed for high performance automatic saw mill lines. The saw blades are manufactured from the highest quality steel using a special technology, adapted to the type of machining (pre-sawing, formatting, splitting), kind of material (frozen, wet or dry wood) and parameters and conditions during cutting in order to guarantee proper work of the saw blade in extremely difficult conditions.

The chapter "Special saw blades" includes only example proposals of saw blades with standard dimensions. On request we can suggest and produce a proper saw blade for the needed type of machining, material as well as parameters and conditions prevailing during work.

Thin saw blades 1.48

Spline & CanDrive 1.50

Saw blades for HewSaw 1.51

Special multi-rip saw blades 1.52

Conical saw blades 1.53

Recessed multi-rip saw blades 1.54

Recessed saw blades for HewSaw 1.55

Recessed ring-saw blades 1.56

Ring-saw blades 1.57

1

Thin saw blades



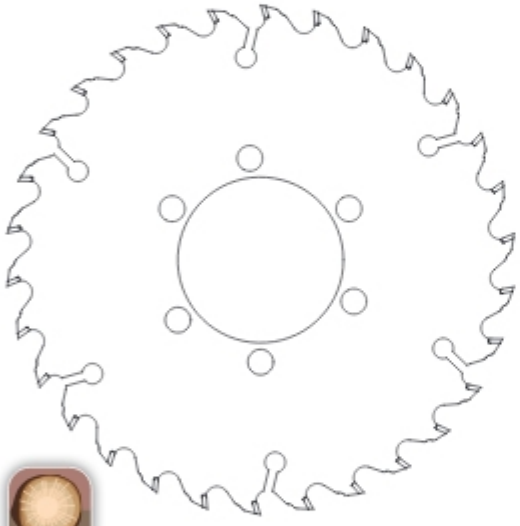



GM 

GS 

Special thin saw blades with straight (GM) or alternate top bevel (GS) teeth and hard, properly chosen carbide tips, designed for splitting solid wood (lamellas) on 2-spindle high--efficiency automatic splitting lines.
Construction of the saw blade guarantees high splitting efficiency with high quality of lamellas and, at the same time, minimizing waste by reducing kerf thickness.
Special body coating technology prevents the resin from sticking to the blade and lowers the blade-wood friction.

Type of cut: longitudinal.

Material: solid dry wood, soft and hard.



Type	D mm	B mm	b mm	d mm	z		
PI-501	180	1,3	0,9	50	32	GM/GS	+
PI-501	200	1,3	0,9	65	30	GM/GS	+
PI-501	200	1,4	1,0	90	32	GM/GS	+
PI-501	200	1,8	1,2	90	32	GM/GS	+
PI-501	200	2,0	1,4	90	32	GM/GS	+
PI-501	225	1,4	1,0	70	32	GM/GS	+
PI-501	225	1,6	1,2	70	32	GM/GS	+
PI-501	225	1,8	1,2	70	32	GM/GS	+
PI-501	250	1,4	1,0	70	36	GM/GS	+
PI-501	250	1,6	1,2	70	36	GM/GS	+
PI-501	250	2,0	1,4	70	36	GM/GS	+

Thin saw blades with wiper knives

Special thin saw blades with wiper knives and with straight (GM) or alternate top bevel (GS) teeth and hard, properly chosen carbide tips, designed for splitting solid wood (lamellas) on 1 or 2-spindle high-efficiency automatic splitting lines.
Construction of the saw blade guarantees high splitting efficiency with high quality of lamellas and, at the same time, minimizing wastes by reducing kerf thickness.
Special body coating technology prevents the resin from sticking to the blade and lowers the blade-wood friction.

Type of cut: longitudinal.

Material: solid dry wood, soft and hard.



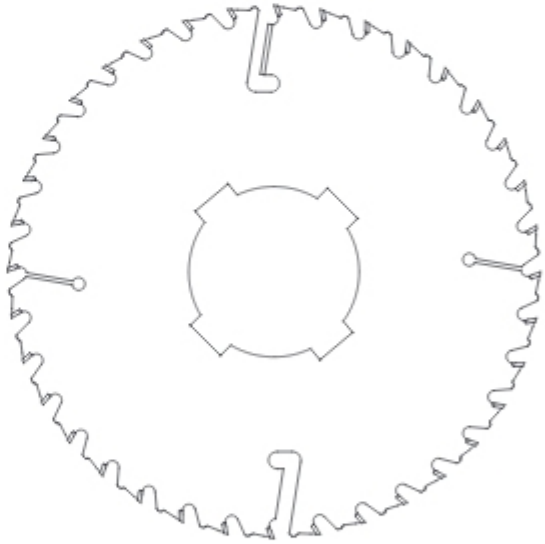



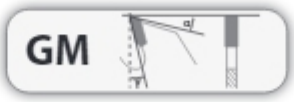



Type	D mm	B mm	b mm	d mm	z		
PI-502	200	1,8	1,2	60	16+2	GM	+
PI-502	225	1,8	1,2	60	20+4	GM	+
PI-502	225	2,0	1,4	65	20+4	GM	+
PI-502	225	2,2	1,4	60	20+4	GM	+
PI-502	250	1,8	1,2	80	36+2	GM	+
PI-502	250	2,0	1,4	60	24+4	GM	+
PI-502	325	2,0	1,6	60	42+4	GM	+

1

Spline & CanDrive



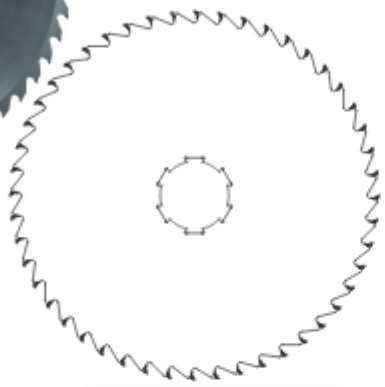

Special saw blades with the central bore type Spline & Can-Drive with flat (GM) or alternate top bevel (GS) teeth. Saw blades with hard, properly chosen carbide or stellite tips designed for cutting fresh (wet and frozen) wood. Ripping saw blades are equipped with special design of chip breaker, to guarantee optimal work efficiency of the tool.

Type of cut: longitudinal.

Material: solid wet wood (soft and hard), frozen wood.



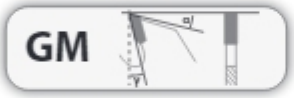



Type	D mm	B mm	b mm	d mm	z		
PI-501	428	3,4	2,4	Spline or Can Drive	30	GM	+
PI-501	500	3,4	2,2	Spline or Can Drive	36	GS	+
PI-501	500	3,4	2,6	Spline or Can Drive	36	GS	+
PI-501	500	4,8	3,5	Spline or Can Drive	48	GM	+
PI-501	500	5,0	3,5	Spline or Can Drive	48	GM	+
PI-501	500	5,0	3,5	Spline or Can Drive	60	GM	+
PI-501	508	3,4	2,4	Spline or Can Drive	36	GM	+
PI-501	508	3,4	2,4	Spline or Can Drive	42	GM	+
PI-501	508	3,8	2,4	Spline or Can Drive	48	GM	+
PI-501	508	3,8	2,4	Spline or Can Drive	60	GM	+
PI-501	600	4,0	2,8	Spline or Can Drive	48	GM	+
PI-501	610	4,2	2,8	Spline or Can Drive	40	GM	+
PI-501	660	4,6	3,0	Spline or Can Drive	18	GM	+
PI-501	660	4,0	2,6	Spline or Can Drive	24	GM	+
PI-501	660	4,6	4,0	Spline or Can Drive	32	GM	+
PI-501	700	4,0	2,8	Spline or Can Drive	42	GM	+
PI-501	700	4,0	2,8	Spline or Can Drive	48	GM	+
PI-501	700	4,2	2,8	Spline or Can Drive	42	GM	+
PI-501	700	4,2	2,8	Spline or Can Drive	48	GM	+
PI-501	700	4,4	3,0	Spline or Can Drive	48	GM	+
PI-501	710	4,2	2,8	Spline or Can Drive	48	GM	+
PI-501	710	4,2	2,8	Spline or Can Drive	56	GM	+
PI-501	720	4,4	3,0	Spline or Can Drive	48	GM	+
PI-501	800	4,2	2,8	Spline or Can Drive	56	GM	+

Saw blades for HewSaw

Special multi-rip saw blades with straight teeth (GM) and hard, properly chosen carbide or stellite tips. Saw blades with wiper knives or wiper knives and special holes enabling the blade to work in a set with a formatting cutter, designed for longitudinal cutting of wood on high-efficiency automatic HewSaw sawmill lines produced by Veisto.
Special body coating technology prevents the resin from sticking to the blade and lowers the blade-wood friction.

Type of cut: longitudinal.

Material: solid wet wood (soft and hard), frozen wood.



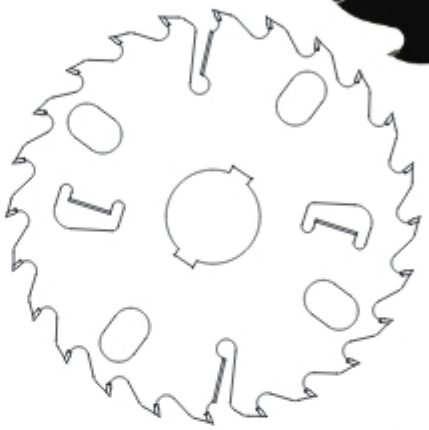

HM STL GM

Machine	Type	D mm	B mm	b mm	d mm	z			
Hew Saw	PI-510	251	3,6	2,4	55	18+3	GM	L/R	+
Hew Saw	PI-510	251	4,0	2,8	55	18+3	GM	L/R	+
Hew Saw	PI-510	351	2,8	1,8	70	30+4	GM	L/R	+
Hew Saw	PI-510	351	3,3	2,1	70	30+4	GM	L/R	+
Hew Saw	PI-510	351	3,6	2,4	70	30+4	GM	L/R	+
Hew Saw	PI-510	351	3,8	2,6	70	24+4	GM	L/R	+
Hew Saw	PI-510	351	3,8	2,6	70	30+4	GM	L/R	+
Hew Saw	PI-510	351	4,0	2,8	70	24+4	GM	L/R	+
Hew Saw	PI-510	351	4,0	2,8	70	30+2	GM	L/R	+
Hew Saw	PI-510	351	4,0	2,8	99	30+4	GM	L/R	+
Hew Saw	PI-510	401	4,0	2,8	70	24+4	GM	L/R	+
Hew Saw	PI-510	401	4,0	2,8	99	40+2	GM	L/R	+
Hew Saw	PI-510	450	3,9	2,6	99	30+6	GM	L/R	+
Hew Saw	PI-510	450	4,2	2,8	200	36+3	GM	L/R	+
Hew Saw	PI-510	450	4,4	3,1	99	30+6	GM	L/R	+
Hew Saw	PI-510	450	4,6	3,0	115	28+4	GM	L/R	+
Hew Saw	PI-510	450	5,0	3,4	115	24+4	GM	L/R	+
Hew Saw	PI-510	450	5,4	4,1	99	24+6	GM	L/R	+
Hew Saw	PI-510	451	3,8	2,4	99	28+4	GM	L/R	+
Hew Saw	PI-510	451	4,5	3,0	99	28+4	GM	L/R	+

1

Special multi-rip saw blades

Special multi-rip saw blades with straight teeth (GM) and hard, properly chosen carbide or stellite tips, with wiper knives, designed for ripping wood on high-efficiency automatic machines such as HewSaw, Linck, EWD, Heinola, Ari-Vislanda, Soederhamn and others.
Special body coating technology prevents the resin from sticking to the blade and lowers the blade-wood friction.

Type of cut: longitudinal.

Material: solid wet wood (soft and hard), frozen wood.



GM

HM STL

Machine	Type	D mm	B mm	b mm	d mm	z			
Linck	PI-510	360	3,6	2,2	150	20+4	GM	L/R	+
Linck	PI-510	410	4,0	2,6	150	20+4	GM	L/R	+
Söderhamn	PI-510	435	4,2	2,8	144,5	30+6	GM	L/R	+
Linck	PI-510	440	4,2	2,8	120	20+4	GM	L/R	+
Linck	PI-510	440	4,6	3,1	120	24+4	GM	L/R	+
Linck	PI-510	440	5,0	3,6	120	32+6	GM	L/R	+
Linck	PI-510	470	4,0	2,6	150	28+4	GM	L/R	+
Söderhamn	PI-510	485	4,5	3,3	144,5	24+6	GM	L/R	+
Linck	PI-510	490	4,6	3,1	120	32+6	GM	L/R	+
Linck	PI-510	490	5,0	3,6	120	32+6	GM	L/R	+
Linck	PI-510	505	4,6	3,1	120	24+4	GM	L/R	+
Linck	PI-510	520	3,6	2,2	150	28+6	GM	L/R	+
EWD	PI-510	520	4,2	2,9	160	36+6	GM	L/R	+
Linck	PI-510	540	3,6	2,4	300	30+3	GM	L/R	+
Linck	PI-510	540	4,2	3,1	225	30+6	GM	L/R	+
Linck	PI-510	540	4,6	3,3	150	24+4	GM	L/R	+
Linck	PI-510	540	5,0	3,6	150	30+6	GM	L/R	+
Hew Saw	PI-510	550	4,6	3,0	115	42+6	GM	L/R	+
Hew Saw	PI-510	550	5,2	3,4	115	30+6	GM	L/R	+
Heinola	PI-510	556	3,6	2,4	160/260	36+3	GM	L/R	+
Heinola	PI-510	556	3,6	2,4	160/260	42+3	GM	L/R	+
Heinola	PI-510	556	4,2	2,8	160/260	38+4	GM	L/R	+
Heinola	PI-510	556	4,6	3,2	160/260	30+6	GM	L/R	+
Heinola	PI-510	556	4,6	3,2	160/260	32+4	GM	L/R	+
Hew Saw	PI-510	600	3,9	2,6	99	42+6	GM	L/R	+
Hew Saw	PI-510	600	4,4	3,1	99	42+6	GM	L/R	+
Linck	PI-510	600	5,0	3,6	120	28+6	GM	L/R	+
Linck	PI-510	648	5,0	3,6	165	20+6	GM	L/R	+

Conical saw blades

Special conical-shaped body saw blades with straight teeth (GM) and hard, properly chosen carbide or stellite tips, with or without wiper knives, designed for ripping wood on high-efficiency automatic sawmill lines.
Conical construction of the saw blade body guarantees high cutting efficiency and, at the same time, minimizing waste by reducing kerf thickness in spite of large diameters. Special body coating technology prevents the resin from sticking to the blade and lowers the blade-wood friction.

Type of cut: longitudinal.

Material: solid wet wood (soft and hard), frozen wood.



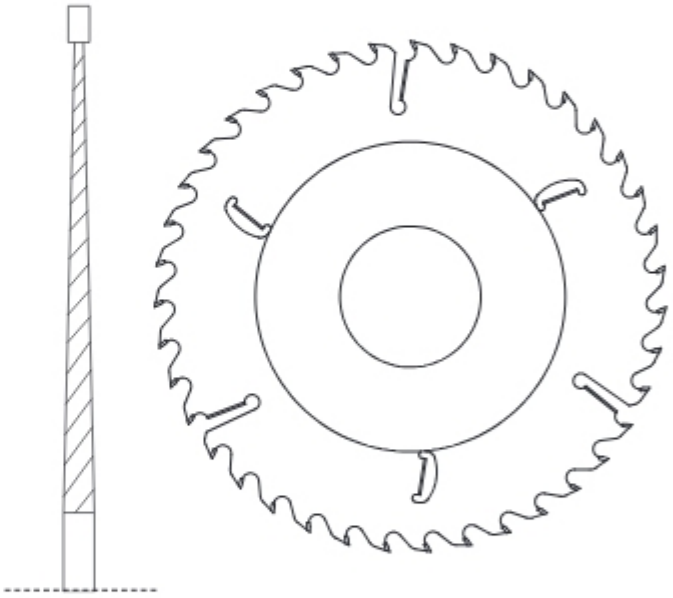



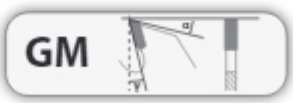



Machine	Type	D mm	B mm	$b-b_1$ mm	d mm	z			
Ani	PI-501	550	5,5	3,5–3,8	120	30	GM	L/R	+
Linck	PI-510	390	3,4	2,0–2,6	150	34+4	GM	L/R	+
Linck	PI-510	440	3,2	2,0–2,4	150	32+4	GM	L/R	+
Linck	PI-510	515	3,6	2,2–2,6	150	42+4	GM	L/R	+
Linck	PI-510	530	3,6	2,2–2,6	150	44+4	GM	L/R	+
Linck	PI-510	530	3,8	2,4–2,8	150	44+4	GM	L/R	+
Linck	PI-510	545	3,4	1,9–2,2	150	39+6	GM	L/R	+

1

Recessed multi-rip saw blades

Special recessed-body saw blades for multi-rip machines with straight teeth (GM) and hard, properly chosen carbide or stellite tips , with wiper knives, designed for longitudinal cutting of wood on high-efficiency automatic sawmill lines. Special recessed construction of the saw blade body guarantees high splitting efficiency and, at the same time, minimizing waste by reducing kerf thickness in spite of large diameters.



GM

HM STL

Machine	D mm	B mm	$b-b_1$ mm	d mm	z			
Artiglio	450	5,0	3,0–7,2	60	36+4	GM	L/R	+
Linck	505	5,2	3,6–6,8	120	20+4	GM	L/R	+
Linck	505	5,2	3,6–6,8	120	28+4	GM	L/R	+
Linck	530	5,4	3,6–6,8	105	36+6	GM	L/R	+
Linck	540	4,4	2,8–5,0	150	30+6	GM	L/R	+
Linck	540	5,0	3,4–6,8	150	30+6	GM	L/R	+
Linck	540	5,5	4,0–7,0	150	24+6	GM	L/R	+
Linck	540	5,4	3,6–6,8	150	26+6	GM	L/R	+
Linck	550	5,2	3,5–6,8	150	26+6	GM	L/R	+
Linck	550	5,4	3,5–6,8	150	32+6	GM	L/R	+
Linck	580	5,2	3,8–6,8	140	26+6	GM	L/R	+
Artiglio	600	5,6	4,0–7,2	106	24+6	GM	L/R	+
Linck	620	5,6	3,9–6,8	170	28+6	GM	L/R	+
Heinola	620	5,4	4,2–6,5	160/260	40+4	GM	L/R	+
Heinola	620	4,6	3,4–6,5	160/260	40+4	GM	L/R	+
Linck	650	5,6	4,0–6,7	160	24+6	GM	L/R	+

Recessed saw blades for HewSaw

Special recessed-body saw blades with straight teeth (GM) and hard, properly chosen carbide or stellite tips, with or without wiper knives, designed for pre-sawing wood and formatting (D=252 and D=316) on high-efficiency automatic HewSaw sawmill lines produced by Veisto.
Special construction of the saw blade with properly directed chip flow achieved by shaping the gullet guarantees high work efficiency of the blades.

Type of cut: longitudinal.

Material: solid wet wood (soft and hard), frozen wood.

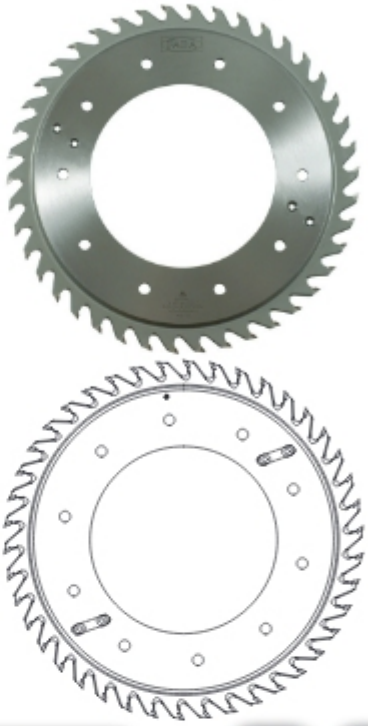





Machine	Type	D mm	B mm	$b-b_1$ mm	d mm	z				
Hew Saw	PI-518	252	4,0	3,5–6,9	70/99	20	GM	L/R	CF	+
Hew Saw	PI-518	252	4,0	3,5–6,9	70/99	20	GT or GW	L/R	CF	+
Hew Saw	PI-518	252	4,0	3,5–6,9	70/99	22	GM	L/R	CF	+
Hew Saw	PI-518	252	4,0	3,5–6,9	70/99	22	GT or GW	L/R	CF	+
Hew Saw	PI-518	316	4,0	3,5–6,9	70	27	GM	L/R	CF	+
Hew Saw	PI-518	316	4,0	3,5–6,9	70	27	GT or GW	L/R	CF	+
Hew Saw	PI-518	345	3,8	2,9–10,7	144,2	36	GM	L/R	CF, KP	+
Hew Saw	PI-518	345	4,1	3,2–10,7	144,2	36	GM	L/R	CF, KP	+
Hew Saw	PI-518	345	4,5	3,6–10,7	144,2	36	GM	L/R	CF, KP	+
Hew Saw	PI-518	390	4,1	3,3–8,7	190	39	GM	L/R	CF, KP	+
Hew Saw	PI-518	390	4,3	3,3–8,7	190	39	GM	L/R	CF, KP	+
Hew Saw	PI-518	390	5,3	4,3–8,7	190	39	GM	L/R	CF, KP	+
Hew Saw	PI-518	460	4,0	3,1–8,7	240	42	GM	L/R	CF, KP	+
Hew Saw	PI-518	460	4,1	3,1–8,7	240	42	GM	L/R	CF, KP	+
Hew Saw	PI-518	460	4,5	3,3–8,7	240	42	GM	L/R	CF, KP	+

CF – with or without chip flow
KP – with or without special knives pockets

1

Recessed ring-saw blades

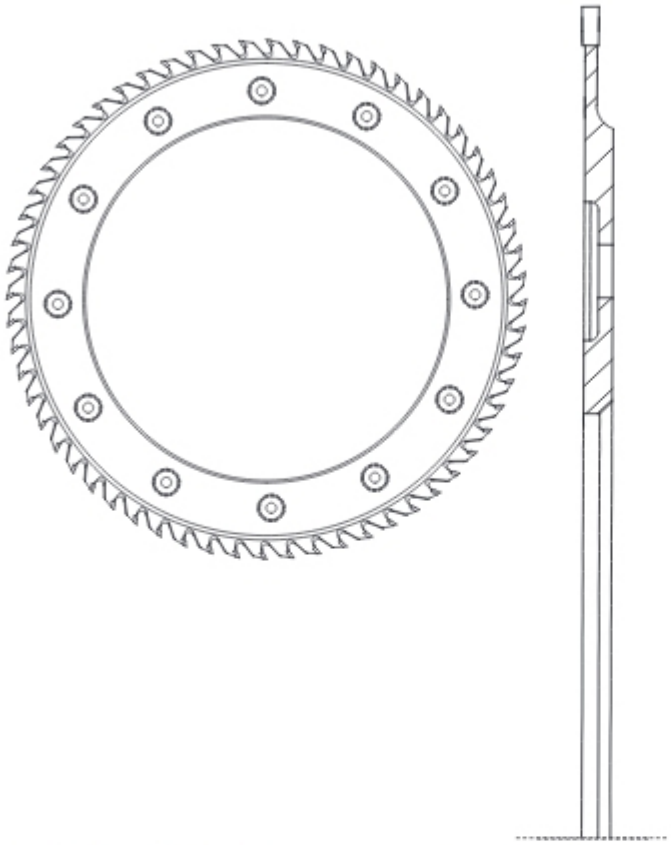

Recessed ring-saw blades with straight teeth (GM) and hard, properly chosen carbide or stellite tips , with wiper knives, designed for pre-sawing wood on high-efficiency automatic machines such as Ari/Heinola, AriVislanda, Söederhamn, Iggesund and others.
Special construction of the saw blade with properly directed chip flow achieved by shaping the gullet guarantees high work efficiency of the blades and, at the same time, minimizing waste by optimizing kerf thickness in spite of large diameters.

Type of cut: longitudinal.

Material: solid wet wood (soft and hard), frozen wood.

GM HM STL

Machine	D mm	B mm	$b-b_1$ mm	d mm	z				
Söderhamn	625	4,0	3,2–6,0	480	48	GM	L/R	CF	+
Söderhamn	625	4,8	3,2–6,0	480	48	GM	L/R	CF	+
Söderhamn	650	4,0	3,2–6,0	480	48	GM	L/R	CF	+
Ari / Vislanda	660	3,7	2,5–7,0	460	60	GM	L/R	CF	+
Ari / Vislanda	660	4,1	3,0–7,0	460	60	GM	L/R	CF	+
Ari / Vislanda	660	4,5	3,5–7,0	460	60	GM	L/R	CF	+
Söderhamn	660	4,8	4,0–6,0	480	48	GM	L/R	CF	+
Ari / Vislanda	660	5,5	4,0–7,0	460	60	GM	L/R	CF	+
Söderhamn	710	4,4	3,3–6,0	560	64	GM	L/R	CF	+
Söderhamn	710	4,5	3,5–6,0	560	64	GM	L/R	CF	+
Söderhamn	720	4,0	3,2–6,0	560	60	GM	L/R	CF	+
Iggesund	720	4,1	3,2–7,0	520	60	GM	L/R	CF	+
Ari / Heinola	720	5,6	4,0–7,0	460	72	GM	L/R	CF	+
Söderhamn	725	3,9	3,2–6,0	560	60	GM	L/R	CF	+
Söderhamn	725	4,7	3,2–6,0	560	60	GM	L/R	CF	+
Linck	730	4,5	3,5–6,0	586	64	GM	L/R	CF	+
Ari / Heinola	735	4,6	3,6–7,0	460	72	GM	L/R	WCF	+

CF – with or without chip flow
WCF – without chip flow only

Ring-saw blades

Special ring-saw blades with straight teeth (GM) and hard, properly chosen carbide or stellite tips, with wiper knives, designed for pre-sawing wood on high-efficiency automatic sawmill lines.

Type of cut: longitudinal.

Material: solid wet wood (soft and hard), frozen wood.

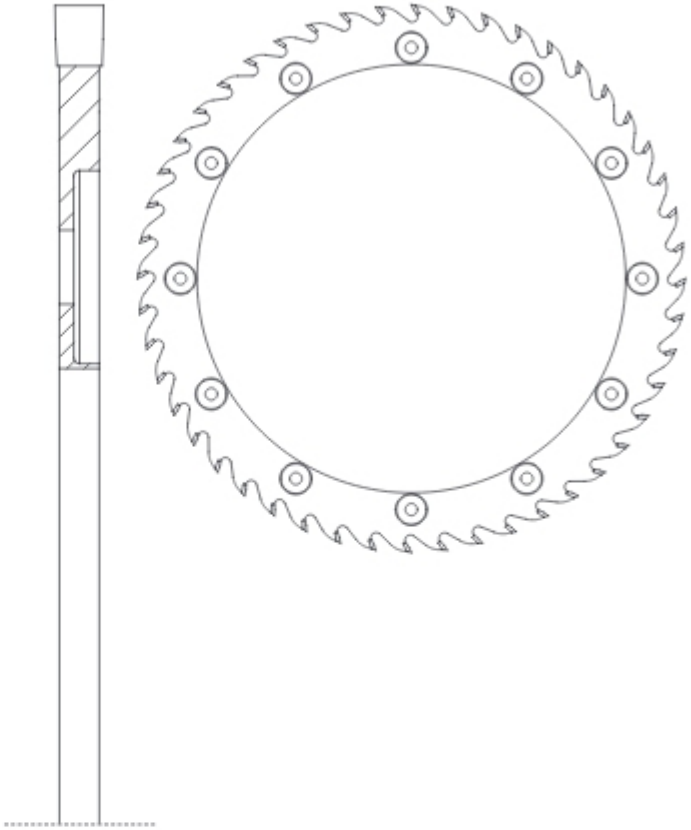

HM STL GM

Machine	D mm	B mm	b mm	d mm	z				
	510	7,0	6,0	320	44	GM	L/R	CF	+
	540	7,3	6,0	320	44	GM	L/R	CF	+
Ari / Vislanda	588	7,5	6,0	460	48	GM	L/R	CF	+
Ari / Vislanda	588	8,4	7,0	460	48	GM	L/R	CF	+
Ari / Vislanda	590	7,0	5,0	460	48	GM	L/R	CF	+
Ari / Vislanda	630	8,4	7,0	460	60	GM	L/R	CF	+
Ari / Slabber	650	7,8	6,6	460	48	GM	L/R	CF	+
Iggesund	650	8,0	7,0	520	60	GM	L/R	CF	+
Söderhamn	680	6,5	5,0	560	56	GM	L/R	CF	+
Söderhamn	700	8,4	6,0	560	60	GM	L/R	CF	+

CF – with or without chip flow

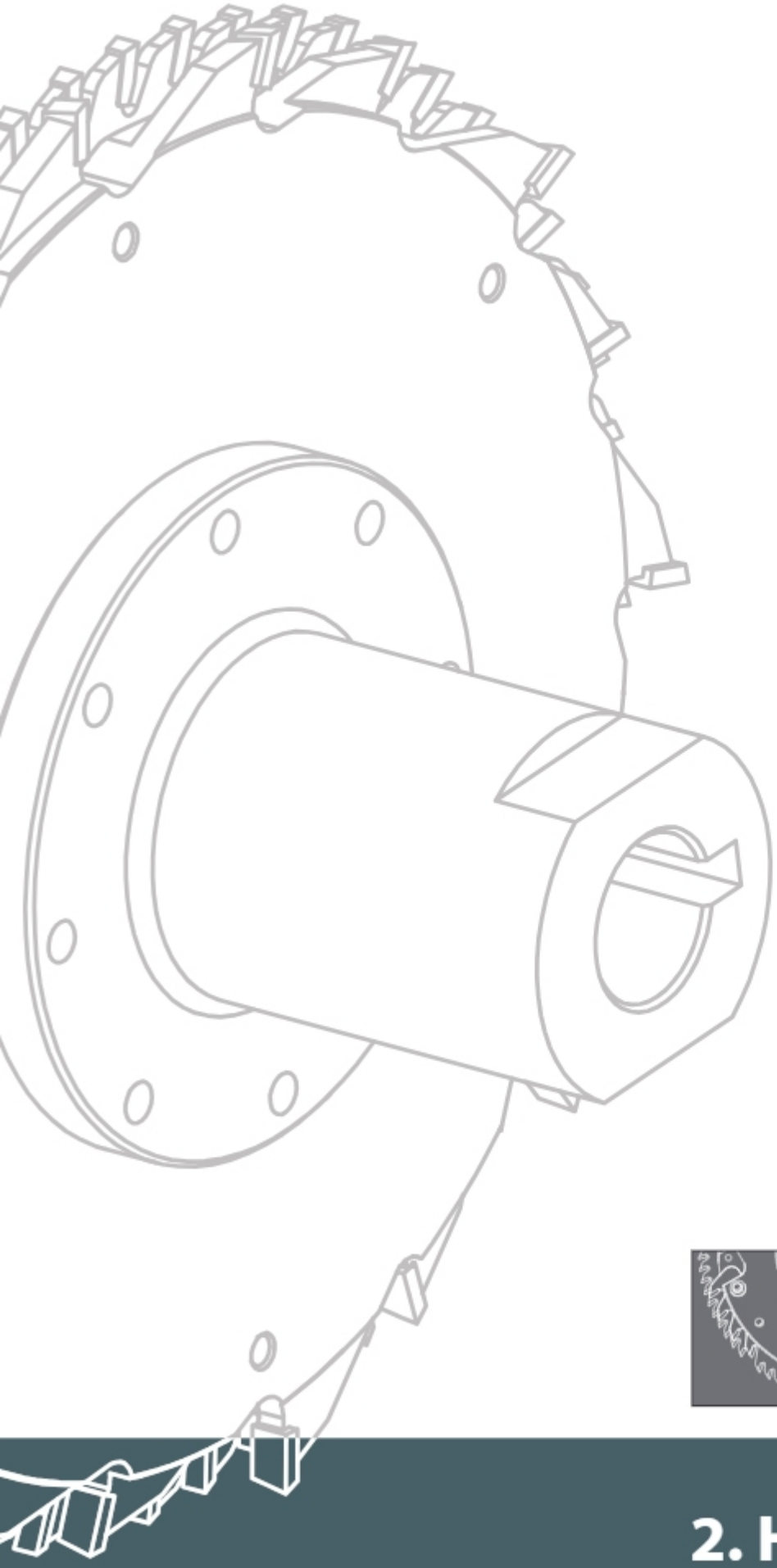

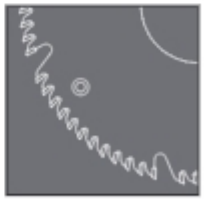



2. Hogger Units

Hogger Units

Hoggers with carbide tips (HM) designed for professional machining of solid soft and hard wood, glued wood and other wood-based materials. As standard, each hogger GSZ-01 includes a saw blade, a hogger with segments and a special sleeve; GSZ-02 and GSZ-03 include a saw blade, a cutter and a sleeve. Hoggers during formatting solid wood work unassisted and during machining wood-based materials they work together with a scoring saw blade.

Hoggers are made from the highest quality steel in special heat treatment technology, in a vacuum heater, which has been properly selected for the type of work, parameters and conditions prevailing during the machining, in order to guarantee proper work of the tool, both in standard and extreme conditions.

The *Hogger Units* chapter includes only example types and models of hoggers with basic dimensions. Big part of our offer are hoggers on client's special request, meeting buyer's specific demands. Before we start designing and production process we take into consideration many issues connected with client's requirements such as expected machining quality, type and parameters of the machine, workpiece material and many others. Hoggers are produced with various types of clamping. Clamping construction guarantees easy installation of the whole sets on the machine. Designing and production time of hoggers or sets of hoggers made on client's request, in most cases, does not take more than 10 working days after agreeing all the details.

All types of hoggers are manufactured on modern CNC machines of world-renowned producers, which guarantee high accuracy and precision of the produced tools. Interoperational and final control verifies tools production and guarantees that every tool sent to the client is manufactured according to technical documentation and standards. The construction and production remains in accordance with all points of safety standard EN/PN-847-1 concerning tools for mechanical woodworking.

Orders should include:

- outer diameter (D) or diameters range,
- bore diameter (d),
- width of formatted element (s),
- number of teeth (z) or spindle rotation speed and feed speed,
- type of machined material,
- other information relevant for designing and production process.



Contents

2. HOGGER UNITS

Pictograms 2.3

2.1 Hoggers 2.4

2.2 Saw blades 2.8

2.3 Hogger segments 2.10

2.4 Special hogger segments 2.11

Pictograms


solid dry softwood


solid dry hardwood


solid wet softwood


solid wet hardwood


solid frozen wood


chipboard


plywood


laminated board



MDF board



HDF board


longitudinal cut


cross and longitudinal cut


cutting with scoring saw blade


mechanical feed



carbide



stellite

- product available on stock
+ approximate production time 9 days

GSZ-01

Complete hogger unit, type **GSZ-01** with very hard carbide tips (T), designed for gross formatting and hogging of chipboard and MDF on automatic lines.

Type of cut: cross and longitudinal, formatting with and without a scoring saw blade.

Przeznaczenie: gross chipboard and MDF.



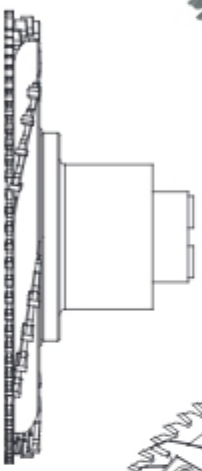

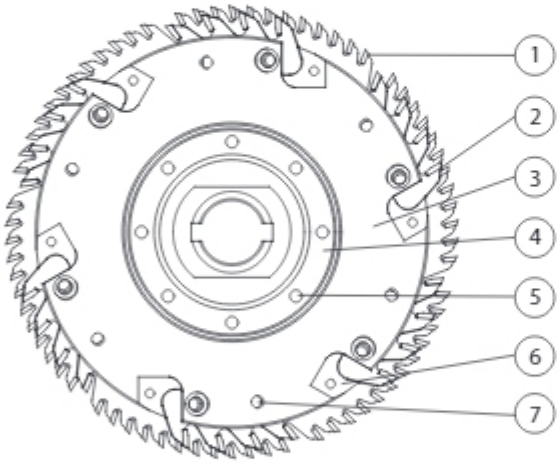



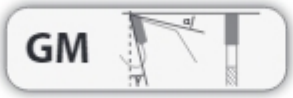

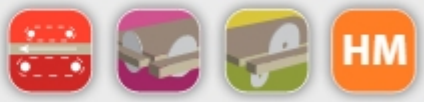

Type	D mm	B mm	d mm	z segment	z			
GSZ-01	250	19	35	6x4	48	L/R	GM	+
GSZ-01	250	19	35	6x4	72	L/R	GM	+
GSZ-01	300	30	35	6x7	72	L/R	GM	+
GSZ-01	350	40	35	6x10	72	L/R	GM	+

Elements	1. Saw blade	2. Hogger segment	3. Body	4. Sleeve	5. M8x20	6. M8x12	7. M6x16
GSZ-01 D=250	PI-406T 250x4,0/80 z=72	PI-541 250x6,0/2,8 z=4					
Quantity	1	6	1	1	4	12	6

GSZ-02

Complete hogger unit, type **GSZ-02** with very hard carbide tips (T), designed for formatting and hogging solid wood.

Type of cut: cross and longitudinal.

Material: solid wood.

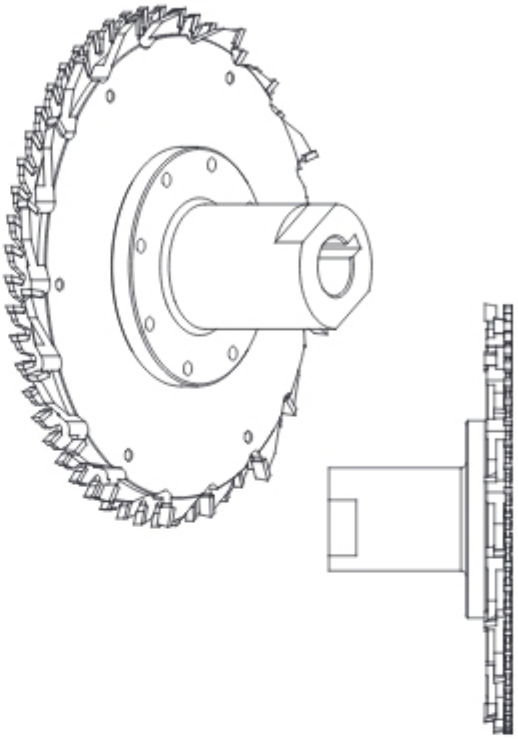

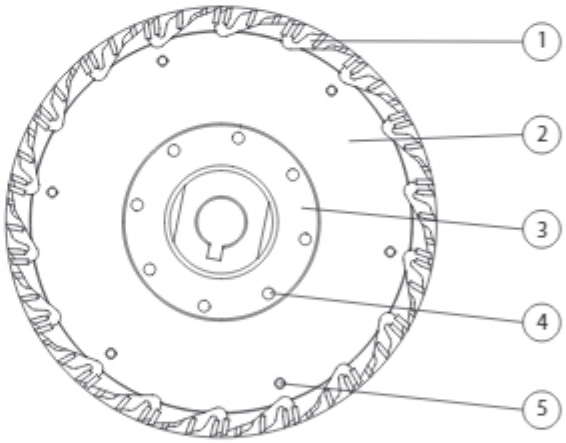

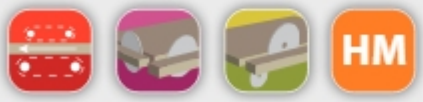

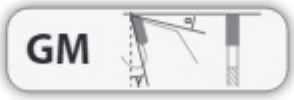



Type	D mm	B mm	d mm	z Cutter	z			
GSZ-02	251	15,1	35	9+9	54	L/R	GM	+
GSZ-02	301	15,7	35	12+12	72	L/R	GM	+

Elements	1. Saw blade	2. Cutter	3. Sleeve	4. M8x20	5. M6x10 TOR1128
GSZ-02 D=251	PI-404T 250x4,4/80 z=54	251x12x80 z=9+9			
Quantity	1	1	1	8	6

GSZ-03

Complete hogger unit, type **GSZ-03** with very hard carbide tips (T), designed for formatting and hogging solid wood.

Type of cut: cross and longitudinal.

Material: solid wood.

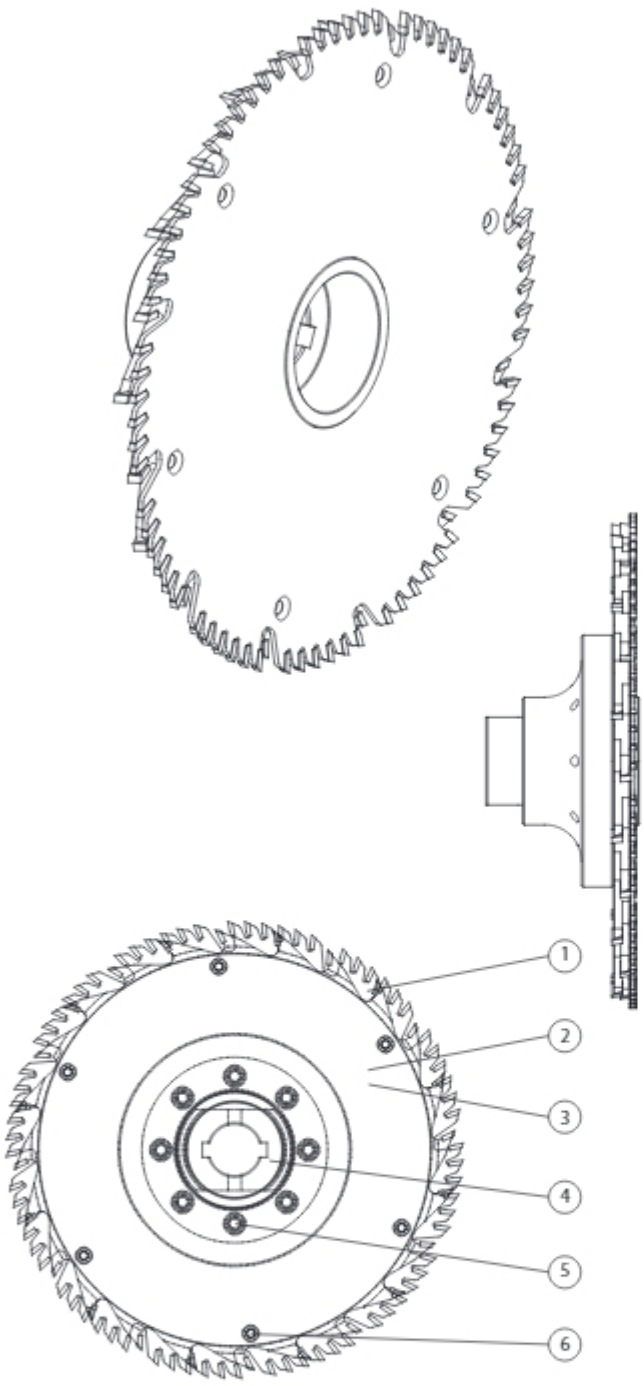

GM

HM

Type	D mm	B mm	d mm	z Cutter	z			
GSZ-03	250	16,5	35	2x6	72	L/R	GM	+

Elements	1. Saw blade	2. Cutter	3. Cutter	4. Sleeve	5. M8x20	6. M6x14 TOR1244
GSZ-03 D=250	PI-406T 250x4,0/80 z=72	245x8,0/6,0x80 z=6	250x8,0/6,0x80 z=6			
Quantity	1	1	1	1	4	6

GSZ-04

Complete hogger unit, type **GSZ-04** with exchangeable very hard carbide tips (T), designed for formatting and hogging solid wood.

Type of cut: cross and longitudinal.

Material: solid wood.



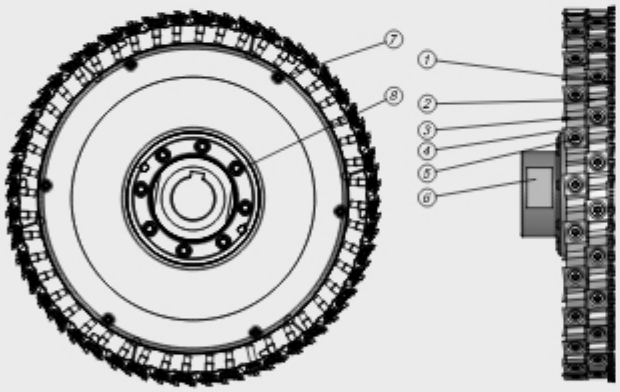

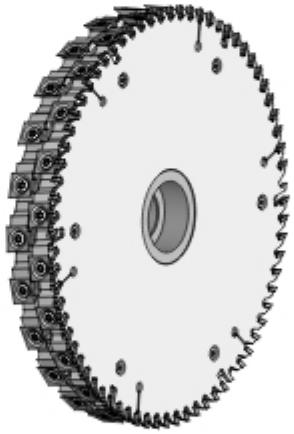

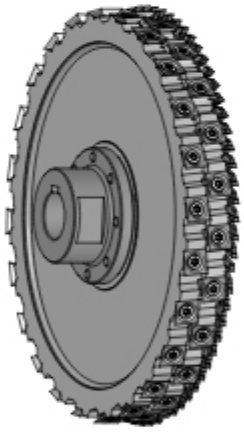

GT

GW

HM

Type	D mm	B mm	d mm	z (cutter)	z (saw blade)			
GSZ-04	350	42	40	24+24	72	L/R	GW/GT	+

Elements	1. Saw blade	2. Cutter (ST)	3. Cutter (AL)	4. Insert	5. Screw	6. Sleeve	7. Screw	8. Screw
GSZ-04 D=355	PI-406T 355x4,4/80 z=72	350x21x80	350x21x80	N0000705 21x21x5,5	TOR6344 M7x16,5		TOR1244 M6x16	PN 82302 M8x48/40
Quantity	1	1	1	48	48	1	6	8

PI-404



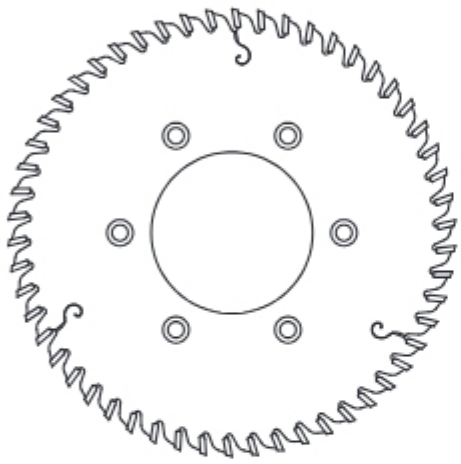

PI-404T

Scoring and formatting saw blades with flat teeth (GM), type **PI-404T** with very hard carbide tips (T), designed for cutting boards on automatic lines, mounted on sleeves.

Type of cut: cross and longitudinal.

Material: plywood, chipboard, laminated board, MDF.

PI-404S

Scoring and formatting saw blades with flat teeth (GM), type **PI-404S** with super hard carbide tips (S), designed for cutting homogenous materials without impurities on automatic lines, mounted on sleeves.

Type of cut: cross and longitudinal.

Material: laminated board, MDF, HDF.

PI-404T



PI-404S





Catalogue number	Type	D mm	B mm	b mm	d mm	Driver holes	z	γ		
S0400001	PI-404T	180	3,2	2,2	65	6/6,5-10,5/90	48	10°	GM-P	•
S0400002	PI-404T	180	3,2	2,2	65	6/6,5-10,5/90	48	10°	GM-L	•
S0400358	PI-404T	180	3,2	2,2	65	6/6,5-10,5/90	54	10°	GM-P	+
S0400359	PI-404T	180	3,2	2,2	65	6/6,5-10,5/90	54	10°	GM-L	+
S0400511	PI-404S	220	4,0	2,8	80	6/6,5-10,5/154	48	12°	GM-P	+
S0400510	PI-404S	220	4,0	2,8	80	6/6,5-10,5/154	48	12°	GM-L	+
S0400820	PI-404T	250	4,4	2,8	80	6/7,0-11,6/200	54	10°	GM-P	+
S0400821	PI-404T	250	4,4	2,8	80	6/7,0-11,6/200	54	10°	GM-L	+

PI-406T

Formatting saw blade with flat teeth (GM), type **PI-406T** with very hard carbide tips (T), designed for working in a set with the hogger GSZ-01.

Type of cut: cross and longitudinal.

Material: chipboard, veneered board, laminated board, MDF.



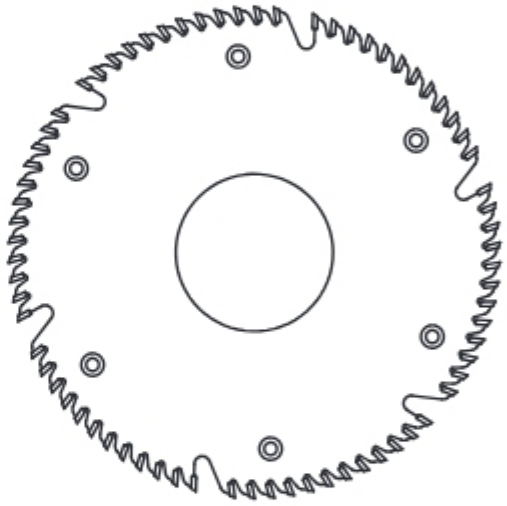







Catalogue number	Type	D mm	B mm	b mm	d mm	Driver holes	z		
S0600021	PI-406T	200	4,0	2,8	80	4/6,5-10,5/140	60	GM-P	•
S0600022	PI-406T	200	4,0	2,8	80	4/6,5-10,5/140	60	GM-L	•
S0600007	PI-406T	250	4,0	3,0	80	6/6,5-10,5/200	72	GM-P	•
S0600008	PI-406T	250	4,0	3,0	80	6/6,5-10,5/200	72	GM-L	•
S0600011	PI-406T	250	4,0	3,0	100	6/6,5-10,5/200	72	GM-P	•
S0600012	PI-406T	250	4,0	3,0	100	6/6,5-10,5/200	72	GM-L	•

PI-540

Special hogger segment with flat teeth (GM), type **PI-540** with carbide tips.





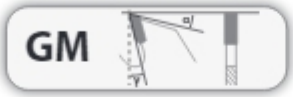

Type	D mm	z	γ		
PI-540	250	10	15°	GM	+
PI-540	330	16	15°	GM	+

PI-541

Hogger segment with flat teeth (GM), type **PI-541** with very hard carbide tips.





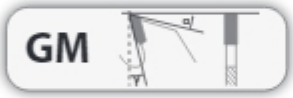

Catalogue number	Type	D mm	B mm	b mm	Driver holes	z	γ		
P4100001	PI-541	200/250	6	2,8	2/9,5/33	4	15°	GM	•

PI-542

Hogger segment with flat teeth (GM), type **PI-542** with very hard carbide tips.





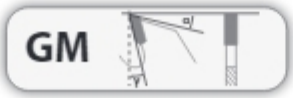

Catalogue number	Type	D mm	B mm	b mm	Driver holes	z	γ		
P4200001	PI-542	250	5,0	2,8	2/8,5/50	7	15°	GM	+

Segments are made only on request according to client's dimensions and requirements.

Special hogger segments PI-540

A special milling (hogging) segment with straight teeth (GM), type **PI-540** and carbide tips.

Type of cut: longitudinal.

Material: solid wet wood (soft and hard), frozen wood.





Type	D mm	B mm	b–b1 mm	z		
PI-540	413,5	3,5	2,5–7,0	9	GM	+
PI-540	414	3,5	2,5–7,0	11	GM	+

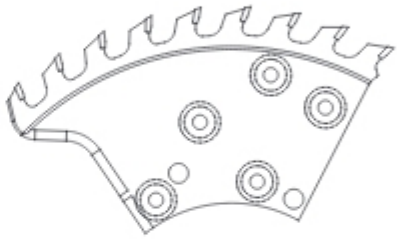

Type	D mm	B mm	b mm	z		
PI-540	555	5,8	5,0	19	GM	+
PI-540	555	6,0	5,0	19	GM	+
PI-540	555	6,2	5,0	19	GM	+

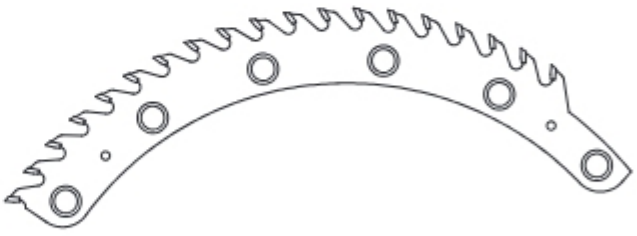

Type	D mm	B mm	b mm	z		
PI-540	730	4,5	3,5	13	GM	+

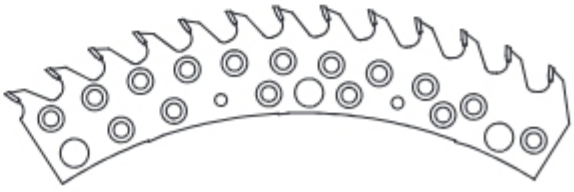

Segments are made only on request according to client's dimensions and requirements.

Special hogger segments PI-540

A special milling (hogging) segment with straight teeth (GM), type **PI-540** and carbide tips.

Type of cut: longitudinal.

Material: solid wet wood (soft and hard), frozen wood.



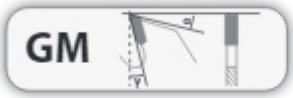



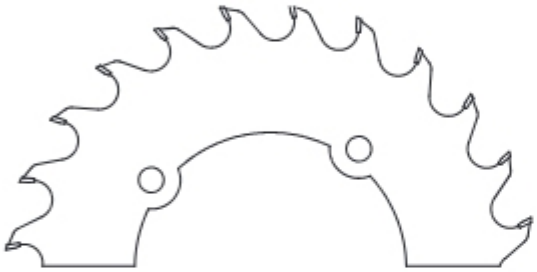

Type	D mm	B mm	b mm	z		
PI-540	338	6,5	5,0	19	GM	+
PI-540	360	4,8	3,6	12	GM	+

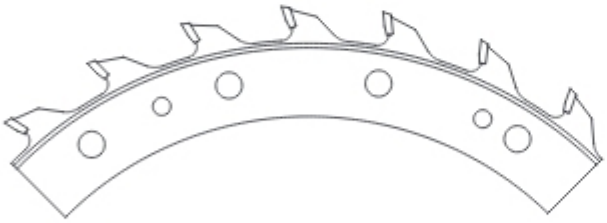

Type	D mm	B mm	$b-b_1$ mm	z		
PI-540	400	3,5	2,5–5,0	8	GM	+
PI-540	403	3,5	2,5–5,0	7	GM	+
PI-540	403	3,5	2,5–5,0	11	GM	+
PI-540	411	4,0	3,0–5,0	7	GM	+
PI-540	570	4,5	3,5–5,0	19	GM	+

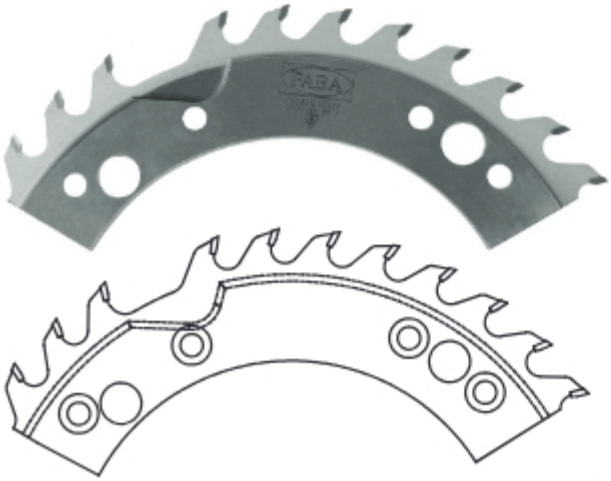

Type	D mm	B mm	$b-b_1$ mm	z		
PI-540	401	3,2	2,4–6,0	11 FSW	GM	+
PI-540	405	3,2	2,4–6,0	11	GM	+

Segments are made only on request according to client's dimensions and requirements.

FABA

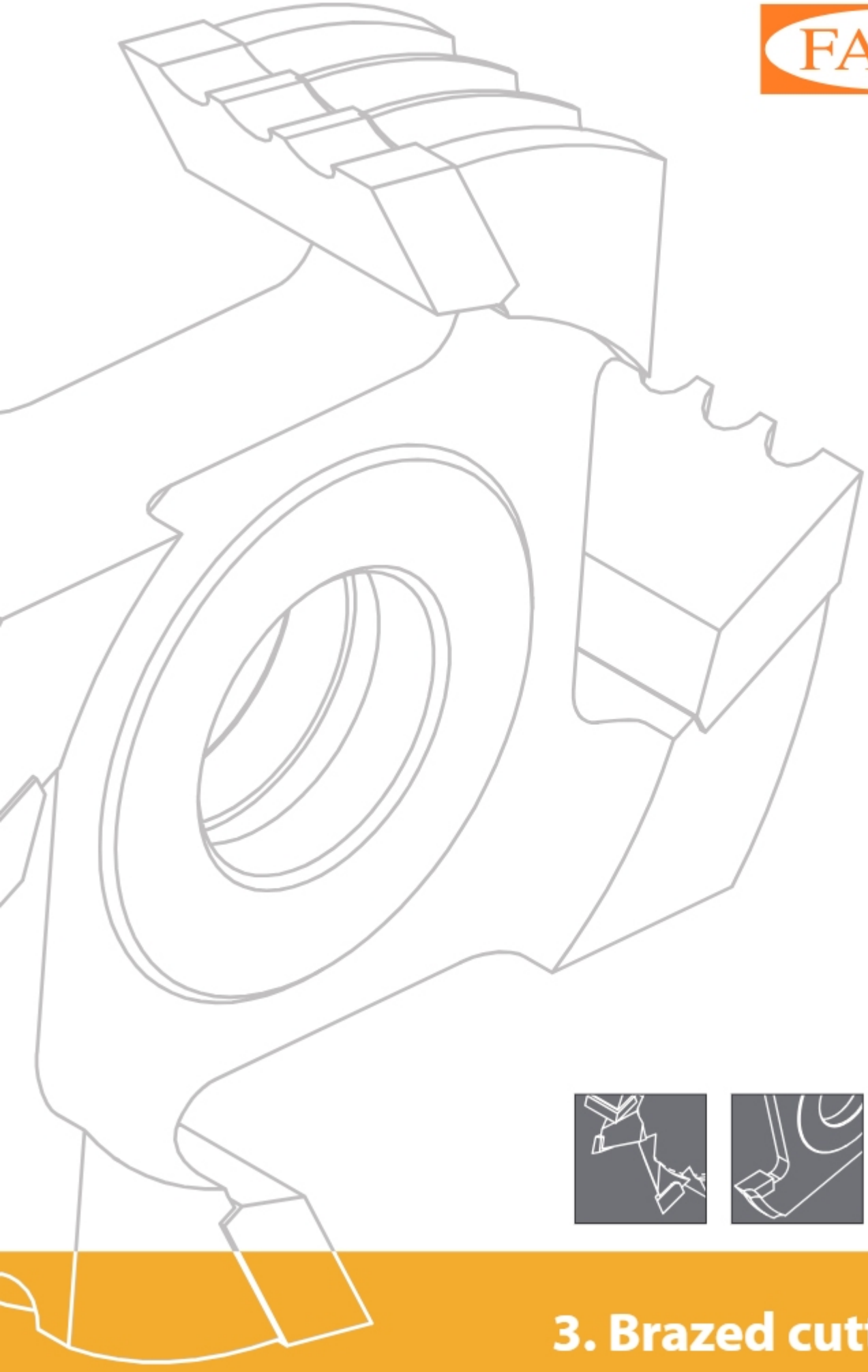



3. Brazed cutters

Brazed cutters

Brazed cutters with high speed steel tips (HSS) designed for professional machining of solid soft wood and brazed cutters with carbide tips (HM) designed for professional machining of solid soft and hard wood, glued wood and other wood-based materials. They are used for machining flat surfaces, grooves, rebates and decorative boards with complex shapes.

Cutters and sets of cutters are made from the highest quality high speed cutting steel in special heat treatment technology, which has been properly selected for the type of work, parameters and conditions prevailing during the machining, in order to guarantee proper work of the tools both in standard and extreme conditions.

All types of cutters are manufactured on modern CNC machines of world-renowned producers, which guarantee high accuracy and precision of the produced tools. The construction and production remain in accordance with all points of safety standard EN/PN-847-1 concerning tools for mechanical woodworking.

Brazed cutters chapter includes only examples of cutters and sets of cutters with basic dimensions.
Optionally, we offer cutters and sets with shear angle and optimized chip flow, mounted on hydro sleeves, designed for professional, very precise machining of solid wood and wood-based materials with feed speed up to 200 m/min. On request, we can suggest, design and manufacture a proper tool for the required type of work, material, parameters and conditions during machining. The production time of catalogue cutters or sets indicated with "+" as well as special tools made on client's request, in most cases does not take more than 10 working days.

Orders should include

- outer diameter (D) or diameters range,
- bore diameter (d),
- number of teeth (z) or spindle rotation speed and feed speed,
- type of machined material,
- profile drawing with dimensions or profile sample.



Contents

3. BRAZED CUTTERS

Pictograms 3.4

Cutters coding system 3.4

Tools for manual feed 3.5

Basic machining parameters 3.5

Rotation direction 3.5

3.1 Slotting cutters 3.6

3.2 Straight cutters with spurs 3.13

3.3 Profile cutters 3.15

3.4 Angle cutters 3.26

3.5 Special cutters 3.28

Sets of cutters 3.34

3.6 Sets for wainscots 3.35

3.7 Sets for floor board 3.38

3.8 Sets for parquet 3.40

3.9 Sets of profile cutters 3.41

3.10 Sets for garden programme 3.49

3.11 Sets with hydro clamping 3.52

Pictograms


solid dry softwood


solid dry hardwood


chipboard


glued wood



MDF



carbide



high-speed cutting steel


hydro clamping


quiet and steady work


flat surfaces


rebating


grooving


edge machining


profiling


resin pockets machining


tonque-groove joint


mechanical feed


manual feed

- available / stock product
+ production time 9–15 working days.

Cutters coding system

Number of teeth – z
2-two-teeth, 4-four-teeth etc.
z=2 v2+2 - two-teeth, two right spurs and two left spurs, etc.
z=2 v2 - two-teeth, two right spurs or two left spurs, etc.

Blade material
HM - carbide
HSS - high speed cutting steel

Rotation
L - left
P - right

Profile type

Width

P-101 125 x 10 / 30 4 . 0 . HM R3 L

Diameter

Bore diameter

Tooth type
0-straight
1-with shear angle
2-with alternate shear angle

Radius
for profile cutters
or angle
for angle cutters

Manual feed

Tools for manual feed – with lower kick back force

As standard, FABA tools are offered for machines with mechanical feed ***(MEC)***.
On request, we sugest, design and produce also tools for machines with manual feed ***(MAN)***. Special construction of tools for manual feed guarantees lower kick back force.

1. ***MAN*** type tools should work within limited cutting speed range V = 40 ÷ 70 m/s.

2. Blade projection c<1,1 mm.

3. Prices of ***MAN*** type tools are calculated as follows:
   - price of two-teeth ***MAN*** type tool equals to price of four-teeth ***MEC*** (mechanical) type tool
   - price of three-teeth ***MAN*** type tool equals to price of six-teeth ***MEC*** (mechanical) type tool

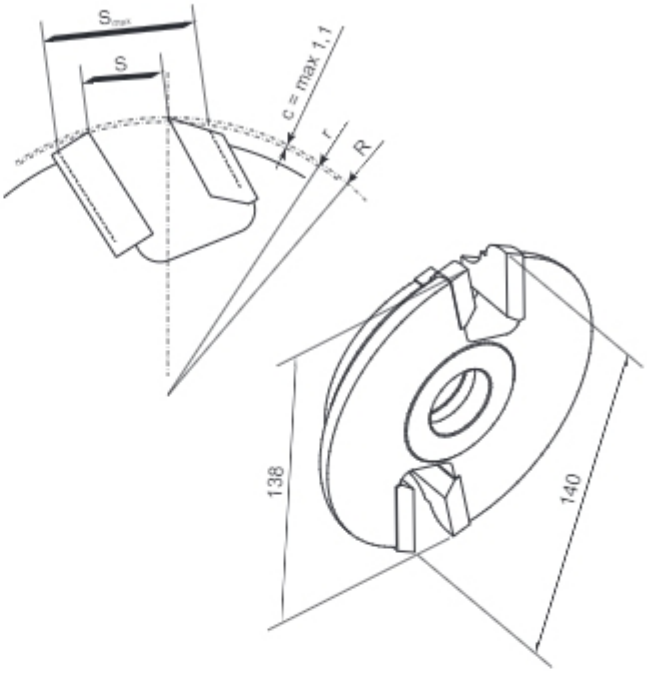

3

Basic cutting parameters

Cutting speed Vc

$$Vc = \frac{D \times n \times \pi}{60\,000} \text{ [m/s]}$$

D - tool diameter [mm]
n - rotation speed [1/min]
$\mathbf{p_z}$ - feed per tooth [mm]
$\mathbf{p_{min}}$ - feed per minute [m/min]
z - number of teeth
π = 3,14

Feed p_{min} / p_z

$$p_{min} \text{ [m/min]} \longleftrightarrow p_z \text{ [mm/tooth]}$$

$$p_{min} = \frac{p_z \times n \times z}{1\,000}$$

$$p_z = \frac{p_{min} \times 1\,000}{n \times z}$$

Rotation direction

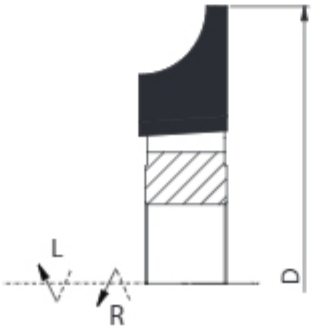

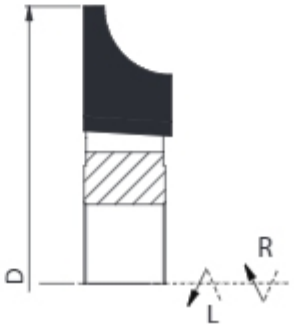

3110 4.0

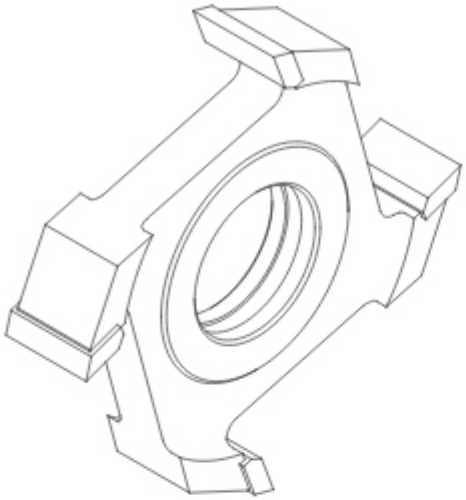

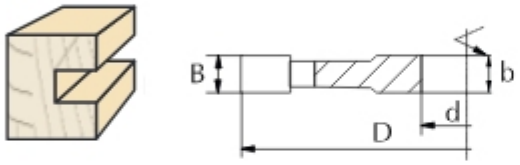

Brazed slotting cutter, type **3110** with four cutting teeth, designed for professional cutting of wood and wood-based materials such as chipboard, MDF and others. Compact construction guarantees precise positioning on the spindle. Cutting edge is parallel to the tool's axis.

Type of work: flat surfaces, rebates and grooves with dimension equal to cutter's width.

Material:

HSS solid softwood

HM solid hardwood, glued wood, chipboard, MDF





D n d	63 12000 25		80 9000 30		100 9000 40		125 9000 50		140 6000 60		160 6000 60		180 6000 60		200 6000 60	
B mm	HSS	HM	HSS	HM	HSS	HM	HSS	HM	HSS	HM	HSS	HM	HSS	HM	HSS	HM
6	+	+	+	+	+	+	+	+	+	+	+	+	+	+	+	+
8	+	+	+	+	+	+	+	+	+	+	+	+	+	+	+	+
10	+	+	+	+	+	+	+	+	+	+	+	+	+	+	+	+
12	+	+	+	+	+	+	+	+	+	+	+	+	+	+	+	+
14	+	+	+	+	+	+	+	+	+	+	+	+	+	+	+	+
16	+	+	+	+	+	+	+	+	+	+	+	+	+	+	+	+
18	+	+	+	+	+	+	+	+	+	+	+	+	+	+	+	+
20	+	+	+	+	+	+	+	+	+	+	+	+	+	+	+	+
25	+	+	+	+	+	+	+	+	+	+	+	+	+	+	+	+
30	+	+	+	+	+	+	+	+	+	+	+	+	+	+	+	+
35	+	+	+	+	+	+	+	+	+	+	+	+	+	+	+	+
40	+	+	+	+	+	+	+	+	+	+	+	+	+	+	+	+
45	+	+	+	+	+	+	+	+	+	+	+	+	+	+	+	+
50	+	+	+	+	+	+	+	+	+	+	+	+	+	+	+	+
55	+	+	+	+	+	+	+	+	+	+	+	+	+	+	+	+
60	+	+	+	+	+	+	+	+	+	+	+	+	+	+	+	+

3110 6.0

Brazed slotting cutter, type **3110** with six cutting teeth, designed for professional cutting of wood and wood-based materials such as chipboard, MDF and others.

Type of work: flat surfaces, rebates and grooves with dimension equal to cutter's width.

Material:
- HSS solid softwood
- HM solid hardwood, glued wood, chipboard, MDF

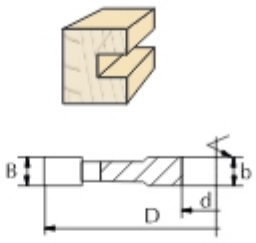

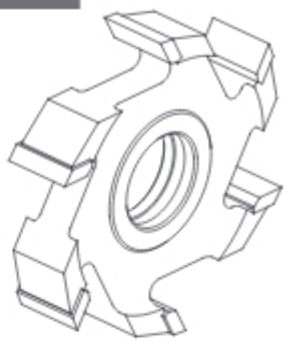





3

D B d	80 9000 30		100 9000 40		125 9000 50		140 6000 60		160 6000 60		180 6000 60		200 6000 60	
B mm	HSS	HM	HSS	HM	HSS	HM	HSS	HM	HSS	HM	HSS	HM	HSS	HM
6	+	+	+	+	+	+	+	+	+	+	+	+	+	+
8	+	+	+	+	+	+	+	+	+	+	+	+	+	+
10	+	+	+	+	+	+	+	+	+	+	+	+	+	+
12	+	+	+	+	+	+	+	+	+	+	+	+	+	+
14	+	+	+	+	+	+	+	+	+	+	+	+	+	+
16	+	+	+	+	+	+	+	+	+	+	+	+	+	+
18	+	+	+	+	+	+	+	+	+	+	+	+	+	+
20	+	+	+	+	+	+	+	+	+	+	+	+	+	+
25	+	+	+	+	+	+	+	+	+	+	+	+	+	+
30	+	+	+	+	+	+	+	+	+	+	+	+	+	+
35	+	+	+	+	+	+	+	+	+	+	+	+	+	+
40	+	+	+	+	+	+	+	+	+	+	+	+	+	+
45	+	+	+	+	+	+	+	+	+	+	+	+	+	+
50	+	+	+	+	+	+	+	+	+	+	+	+	+	+
55	+	+	+	+	+	+	+	+	+	+	+	+	+	+
60	+	+	+	+	+	+	+	+	+	+	+	+	+	+

Catalogue number	Type	D mm	B mm	b mm	d mm	z		
3110W125-0023	3110	125	6	6	40	6	HM	•
3110W125-0001	3110	125	10	10	30	6	HM	•
3110S125-0037	3110	125	10	10	40	6	HSS	•
3110W125-0004	3110	125	10	10	40	6	HM	•
3110W125-0007	3110	125	12	12	30	6	HM	•
3110S125-0059	3110	125	12	12	40	6	HSS	•
3110W125-0009	3110	125	14	12	30	6	HM	•
3110S125-0060	3110	125	14	12	40	6	HSS	•
3110W125-0010	3110	125	16	14	30	6	HM	•
3110S125-0038	3110	125	16	14	40	6	HSS	•
3110W125-0011	3110	125	18	16	30	6	HM	•
3110S125-0061	3110	125	18	16	40	6	HSS	•
3110W125-0012	3110	125	20	18	30	6	HM	•
3110S125-0039	3110	125	20	18	40	6	HSS	•

Catalogue number	Type	D mm	B mm	b mm	d mm	z		
3110W125-0013	3110	125	25	23	30	6	HM	•
3110W125-0014	3110	125	30	16	30	6	HM	•
3110W125-0008	3110	125	35	18	30	6	HM	•
3110W125-0015	3110	125	40	22	30	6	HM	•
3110W125-0016	3110	125	45	24	30	6	HM	•
3110W125-0035	3110	125	60	32	40	6	HM	•
3110S140-0005	3110	140	10	10	40	6	HSS	•
3110W140-0001	3110	140	10	10	40	6	HM	•
3110S140-0016	3110	140	12	12	40	6	HSS	•
3110W140-0097	3110	140	12	12	40	6	HM	•
3110W140-0003	3110	140	20	14	40	6	HM	•
3110W140-0102	3110	140	30	16	40	6	HM	•
3110W140-0104	3110	140	40	22	40	6	HM	•
3110W160-0025	3110	160	10	10	40	6	HM	•

Reduction sleeves are shown on page 8.19.

3110 6.2

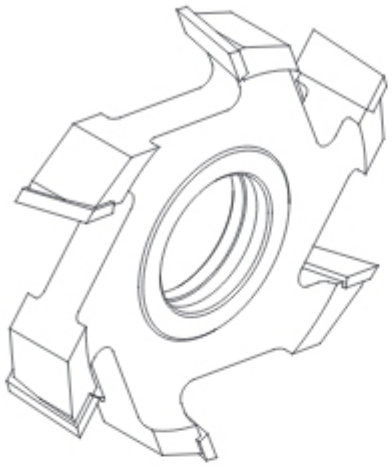

Brazed slotting cutter, type **3110** with six cutting teeth and alternative shear angle designed for professional cutting of wood and wood-based materials such as chipboard, MDF and others. Alternative shear angle allows for high quality of the machined surface.

Type of work: flat surfaces, rebates and grooves with dimension equal to cutter's width.

Material:

HSS solid softwood

HM solid hardwood, glued wood, chipboard, MDF



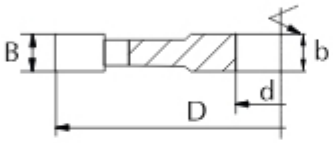





D n d	80 9000 30		100 9000 40		125 9000 50		140 6000 60		160 6000 60		180 6000 60		200 6000 60	
B mm	HSS	HM	HSS	HM	HSS	HM	HSS	HM	HSS	HM	HSS	HM	HSS	HM
6	+	+	+	+	+	+	+	+	+	+	+	+	+	+
8	+	+	+	+	+	+	+	+	+	+	+	+	+	+
10	+	+	+	+	+	+	+	+	+	+	+	+	+	+
12	+	+	+	+	+	+	+	+	+	+	+	+	+	+
14	+	+	+	+	+	+	+	+	+	+	+	+	+	+
16	+	+	+	+	+	+	+	+	+	+	+	+	+	+
18	+	+	+	+	+	+	+	+	+	+	+	+	+	+
20	+	+	+	+	+	+	+	+	+	+	+	+	+	+
25	+	+	+	+	+	+	+	+	+	+	+	+	+	+
30	+	+	+	+	+	+	+	+	+	+	+	+	+	+
35	+	+	+	+	+	+	+	+	+	+	+	+	+	+
40	+	+	+	+	+	+	+	+	+	+	+	+	+	+
45	+	+	+	+	+	+	+	+	+	+	+	+	+	+
50	+	+	+	+	+	+	+	+	+	+	+	+	+	+
55	+	+	+	+	+	+	+	+	+	+	+	+	+	+
60	+	+	+	+	+	+	+	+	+	+	+	+	+	+

3110 8.0

Brazed slotting cutter, type **3110** with eight cutting teeth designed for professional cutting of wood and wood-based materials such as chipboard, MDF and others. Large number of teeth allows for higher feed speed and guarantees optimal workload of the machine spindle.

Type of work: flat surfaces, rebates and grooves with dimension equal to cutter's width.

Material:

- HSS solid softwood
- HM solid hardwood, glued wood, chipboard, MDF

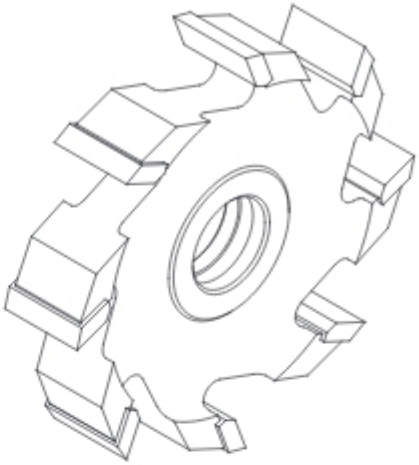

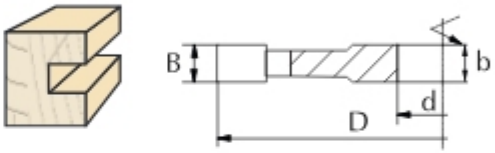





D d	100 9000 40		125 9000 40		140 6000 50		160 6000 60		180 6000 60		200 6000 60	
B mm	HSS	HM	HSS	HM	HSS	HM	HSS	HM	HSS	HM	HSS	HM
6	+	+	+	+	+	+	+	+	+	+	+	+
8	+	+	+	+	+	+	+	+	+	+	+	+
10	+	+	+	+	+	+	+	+	+	+	+	+
12	+	+	+	+	+	+	+	+	+	+	+	+
14	+	+	+	+	+	+	+	+	+	+	+	+
16	+	+	+	+	+	+	+	+	+	+	+	+
18	+	+	+	+	+	+	+	+	+	+	+	+
20	+	+	+	+	+	+	+	+	+	+	+	+
25	+	+	+	+	+	+	+	+	+	+	+	+
30	+	+	+	+	+	+	+	+	+	+	+	+
35	+	+	+	+	+	+	+	+	+	+	+	+
40	+	+	+	+	+	+	+	+	+	+	+	+
45	+	+	+	+	+	+	+	+	+	+	+	+
50	+	+	+	+	+	+	+	+	+	+	+	+
55	+	+	+	+	+	+	+	+	+	+	+	+
60	+	+	+	+	+	+	+	+	+	+	+	+

Catalogue number	Type	D mm	B mm	b mm	d mm	z		
3110W200-0433	3110	200	10	10	30	8	HM	•
3110W200-0434	3110	200	12	12	30	8	HM	•
3110W200-0438	3110	200	20	14	30	8	HM	•

3110 8.2

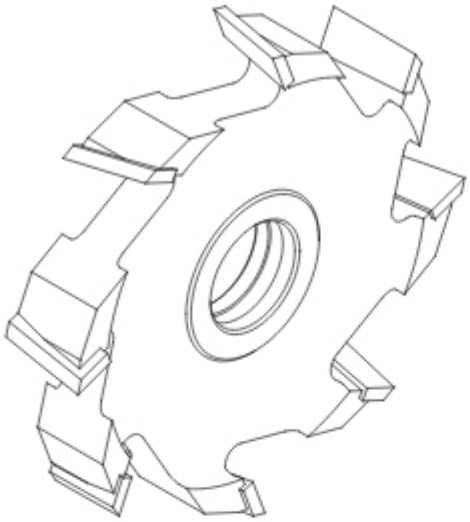

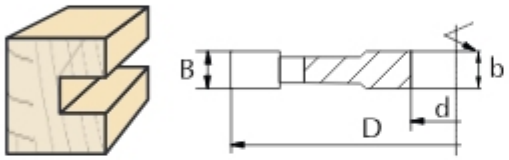

Brazed slotting cutter, type **3110** with eight cutting teeth and alternative shear angle designed for professional cutting of wood and wood-based materials such as chipboard, MDF and others. Alternative shear angle allows for high quality of the machined surface. Large number of teeth allows for higher feed speed and guarantees optimal workload of the machine spindle.
Alternative shear angle allows for high quality of the machined surface with very low energy consumption.

Type of work: flat surfaces, rebates and grooves with dimension equal to cutter's width.

Material:
- HSS solid softwood
- HM solid hardwood, glued wood, chipboard, MDF





D n d	125 9000 40		140 6000 50		160 6000 60		180 6000 60		200 6000 60	
B mm	HSS	HM	HSS	HM	HSS	HM	HSS	HM	HSS	HM
6	+	+	+	+	+	+	+	+	+	+
8	+	+	+	+	+	+	+	+	+	+
10	+	+	+	+	+	+	+	+	+	+
12	+	+	+	+	+	+	+	+	+	+
14	+	+	+	+	+	+	+	+	+	+
16	+	+	+	+	+	+	+	+	+	+
18	+	+	+	+	+	+	+	+	+	+
20	+	+	+	+	+	+	+	+	+	+
25	+	+	+	+	+	+	+	+	+	+
30	+	+	+	+	+	+	+	+	+	+
35	+	+	+	+	+	+	+	+	+	+
40	+	+	+	+	+	+	+	+	+	+
45	+	+	+	+	+	+	+	+	+	+
50	+	+	+	+	+	+	+	+	+	+
55	+	+	+	+	+	+	+	+	+	+
60	+	+	+	+	+	+	+	+	+	+

3110 12.0

Brazed slotting cutter, type **3110** with twelve cutting teeth designed for professional cutting of wood and wood-based materials such as chipboard, MDF and others. Large number of teeth allows for higher feed speed and guarantees optimal workload of the machine spindle.

Type of work: flat surfaces, rebates and grooves with dimension equal to cutter's width.

Material:

- HSS solid softwood
- HM solid hardwood, glued wood, chipboard, MDF

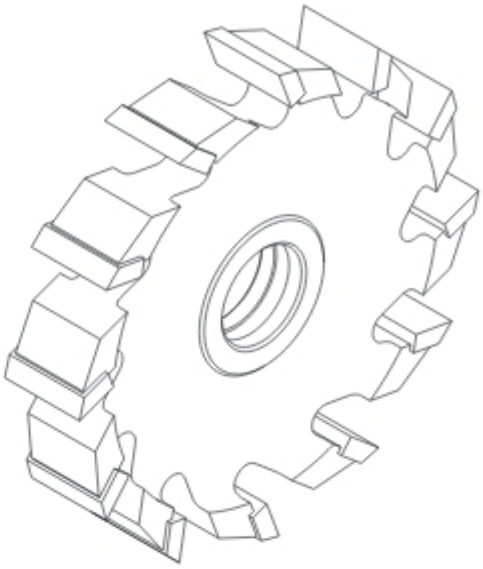

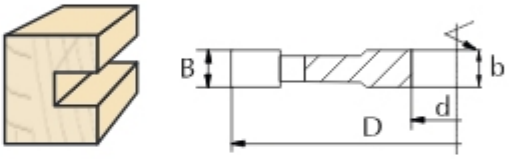





D n d	125 6000 40		140 6000 50		160 6000 60		180 6000 60		200 6000 60	
B mm	HSS	HM	HSS	HM	HSS	HM	HSS	HM	HSS	HM
6	+	+	+	+	+	+	+	+	+	+
8	+	+	+	+	+	+	+	+	+	+
10	+	+	+	+	+	+	+	+	+	+
12	+	+	+	+	+	+	+	+	+	+
14	+	+	+	+	+	+	+	+	+	+
16	+	+	+	+	+	+	+	+	+	+
18	+	+	+	+	+	+	+	+	+	+
20	+	+	+	+	+	+	+	+	+	+
25	+	+	+	+	+	+	+	+	+	+
30	+	+	+	+	+	+	+	+	+	+
35	+	+	+	+	+	+	+	+	+	+
40	+	+	+	+	+	+	+	+	+	+
45	+	+	+	+	+	+	+	+	+	+
50	+	+	+	+	+	+	+	+	+	+
55	+	+	+	+	+	+	+	+	+	+
60	+	+	+	+	+	+	+	+	+	+

3110 12.2

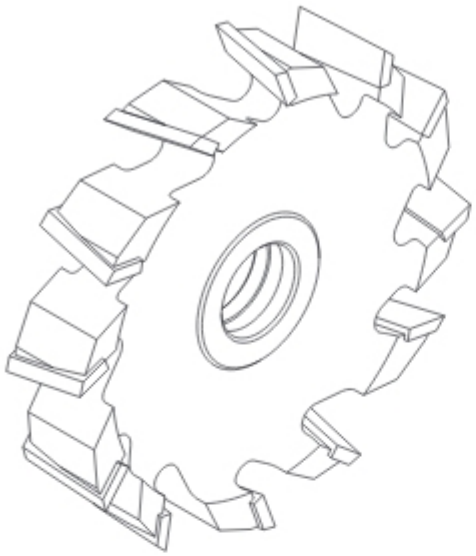

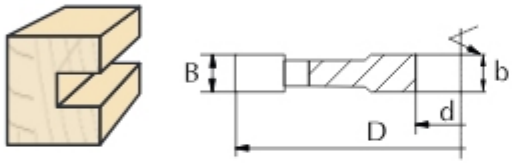

Brazed slotting cutter, type **3110** with twelve cutting teeth and alternative shear angle designed for professional cutting of wood and wood-based materials such as chipboard, MDF and others. Alternative shear angle allows for high quality of the machined surface. Large number of teeth allows for higher feed speed and guarantees optimal workload of the machine spindle.
Alternative shear angle allows for high quality of the machined surface with very low energy consumption.

Type of work: flat surfaces, rebates and grooves with dimension equal to cutter's width.

Material:
- HSS solid softwood
- HM solid hardwood, glued wood, chipboard, MDF



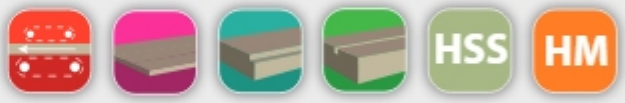

D d B mm	140 6000 50		160 6000 60		180 6000 60		200 6000 60	
	HSS	HM	HSS	HM	HSS	HM	HSS	HM
6	+	+	+	+	+	+	+	+
8	+	+	+	+	+	+	+	+
10	+	+	+	+	+	+	+	+
12	+	+	+	+	+	+	+	+
14	+	+	+	+	+	+	+	+
16	+	+	+	+	+	+	+	+
18	+	+	+	+	+	+	+	+
20	+	+	+	+	+	+	+	+
25	+	+	+	+	+	+	+	+
30	+	+	+	+	+	+	+	+
35	+	+	+	+	+	+	+	+
40	+	+	+	+	+	+	+	+
45	+	+	+	+	+	+	+	+
50	+	+	+	+	+	+	+	+
55	+	+	+	+	+	+	+	+
60	+	+	+	+	+	+	+	+

3110-1

Brazed slotting cutter, type **3110-1** with two cutting teeth and two left and two right spurs (z=2 v2+2) or four cutting teeth and four right and four left spurs (z=4 v4+4) allowing for precise grooving and rebating, designed for professional cutting of wood and wood-based materials such as chipboard, MDF and others.

Type of work: flat surfaces, rebates and grooves with dimension equal to cutter's width.

Material:

HSS solid softwood

HM solid hardwood, glued wood, chipboard, MDF



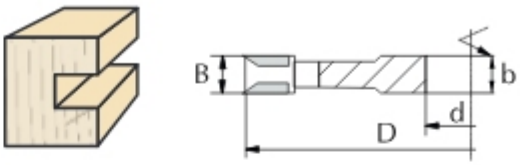



z=2 v2+2

D n d	100 9000 30		125 9000 35		140 6000 40		160 6000 50	
B mm	HSS	HM	HSS	HM	HSS	HM	HSS	HM
6	+	+	+	+	+	+	+	+
8	+	+	+	+	+	+	+	+
10	+	+	+	+	+	+	+	+
12	+	+	+	+	+	+	+	+
14	+	+	+	+	+	+	+	+
16	+	+	+	+	+	+	+	+
18	+	+	+	+	+	+	+	+
20	+	+	+	+	+	+	+	+
25	+	+	+	+	+	+	+	+
30	+	+	+	+	+	+	+	+

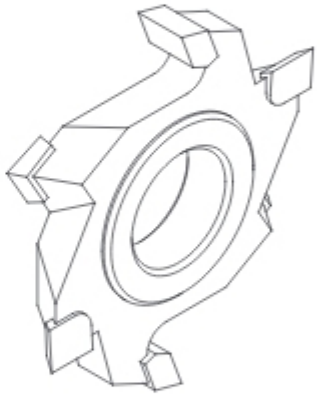

Catalogue number	Type	D mm	B mm	b mm	d mm	z		
3111w125-0005	3110-1	125	10	10	30	z=2 v2+2	HM	•

z=4 v4+4

D n d	160 6000 50		200 6000 50	
B mm	HSS	HM	HSS	HM
6	+	+	+	+
8	+	+	+	+
10	+	+	+	+
12	+	+	+	+
14	+	+	+	+
16	+	+	+	+
18	+	+	+	+
20	+	+	+	+
25	+	+	+	+
30	+	+	+	+
35	+	+	+	+

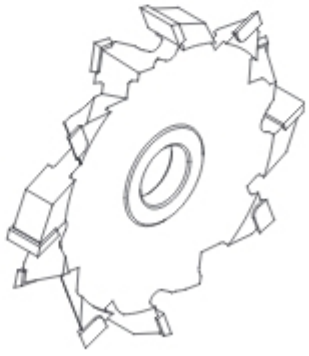

Catalogue number	Type	D mm	B mm	b mm	d mm	z		
3111w140-0100	3110-1	140	10	10	40	z=4 v4+4	HM	•

3110-2 R or L



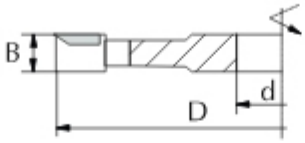

Brazed straight cutter, type **3110-2** with two cutting teeth and two left or right spurs (z=2 v2) or four cutting teeth and four right or four left spurs (z=4 v4) allowing for precise rebating, designed for professional cutting of wood and wood-based materials such as chipboard, MDF and others.

Type of work: precise machining of rebates and grooves with dimension smaller than to cutter's width.

Material:
- HSS solid softwood
- HM solid hardwood, glued wood, chipboard, MDF





z=2 v=2



D n d	100 9000 30		125 9000 35		140 6000 40		160 6000 50		180 6000 50		200 6000 50	
B mm	HSS	HM	HSS	HM	HSS	HM	HSS	HM	HSS	HM	HSS	HM
6	+	+	+	+	+	+	+	+	+	+	+	+
8	+	+	+	+	+	+	+	+	+	+	+	+
10	+	+	+	+	+	+	+	+	+	+	+	+
12	+	+	+	+	+	+	+	+	+	+	+	+
14	+	+	+	+	+	+	+	+	+	+	+	+
16	+	+	+	+	+	+	+	+	+	+	+	+
18	+	+	+	+	+	+	+	+	+	+	+	+
20	+	+	+	+	+	+	+	+	+	+	+	+
25	+	+	+	+	+	+	+	+	+	+	+	+
30	+	+	+	+	+	+	+	+	+	+	+	+
35	+	+	+	+	+	+	+	+	+	+	+	+

z=4 v=4

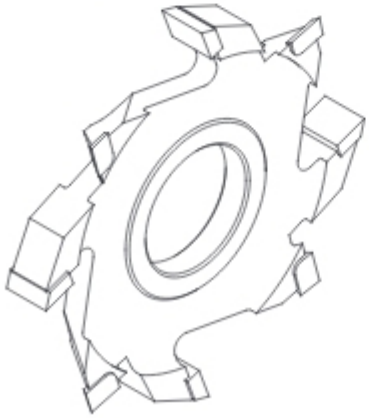

D n d	100 9000 30		125 9000 35		140 6000 40		160 6000 50		180 6000 50		200 6000 50	
B mm	HSS	HM	HSS	HM	HSS	HM	HSS	HM	HSS	HM	HSS	HM
6	+	+	+	+	+	+	+	+	+	+	+	+
8	+	+	+	+	+	+	+	+	+	+	+	+
10	+	+	+	+	+	+	+	+	+	+	+	+
12	+	+	+	+	+	+	+	+	+	+	+	+
14	+	+	+	+	+	+	+	+	+	+	+	+
16	+	+	+	+	+	+	+	+	+	+	+	+
18	+	+	+	+	+	+	+	+	+	+	+	+
20	+	+	+	+	+	+	+	+	+	+	+	+
25	+	+	+	+	+	+	+	+	+	+	+	+
30	+	+	+	+	+	+	+	+	+	+	+	+
35	+	+	+	+	+	+	+	+	+	+	+	+

Diameters

Outer diameter of profile cutter (D) is tightly connected and depends on bore diameter (d) and profile depth (G_p). In order to precisely determine minimum diameter of the cutter (D_{min}) the following formula or diagram should be used:

$$D_{min} = 60 + d + 2 \times G_p$$

D_{min} - minimum diameter
d - bore diameter
G_p - profile depth

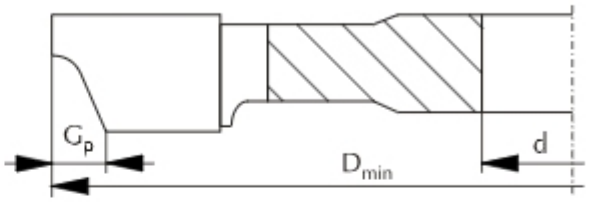

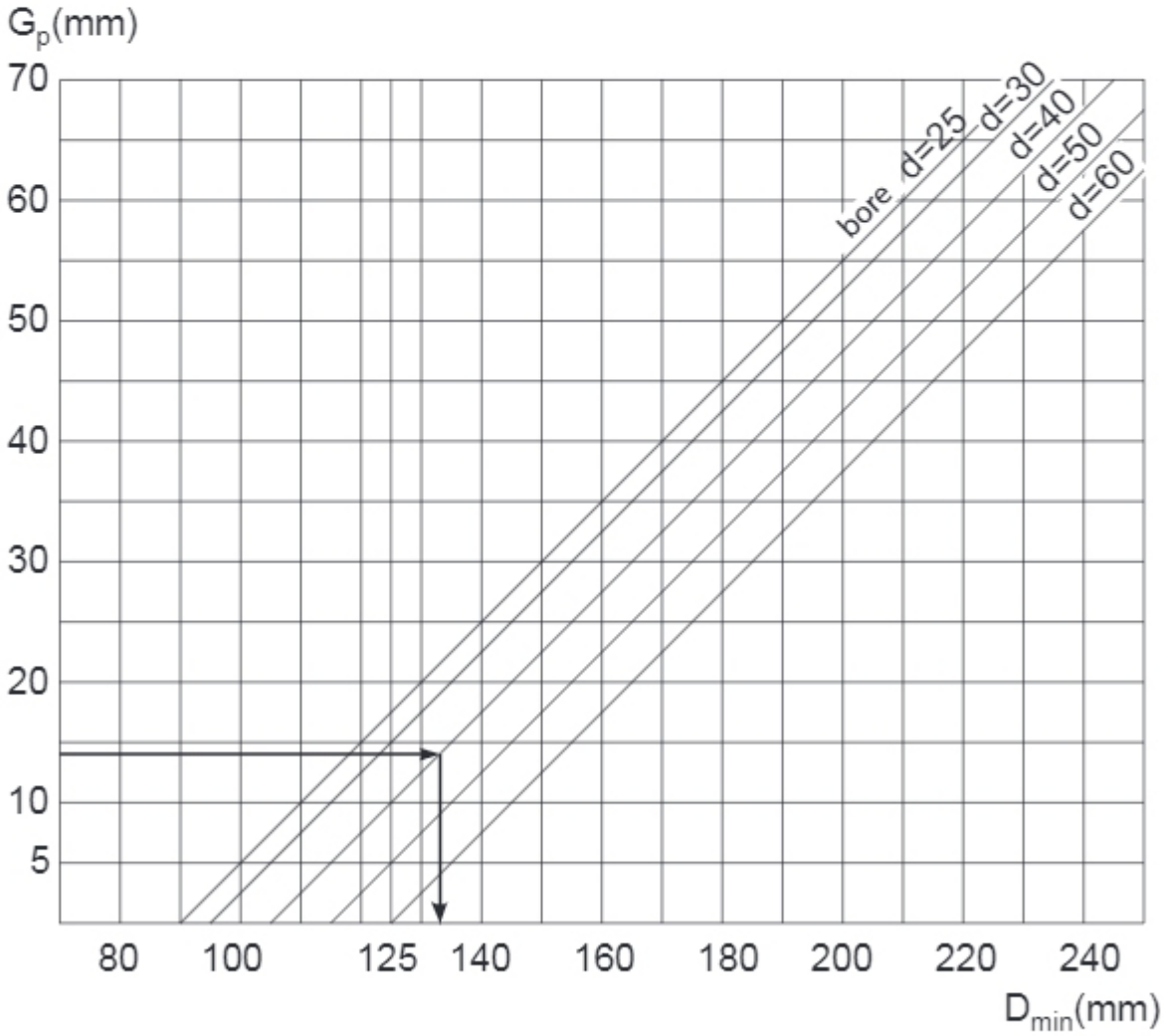

Example:

d = 40 mm
G_p = 14 mm
D_{min} = 60 + 40 +2 x 14 = 128 mm

Round to closest typical bigger than D_{min} D = 130 mm.

P-101 4.0 R or L

Brazed profiled cutter, type **P-101** with four cutting teeth, designed for professional machining of wood and wood-based materials such as chipboard, MDF and others. The cutter is used for cutting quarter rounds with radius R.

Type of work: quarter rounds cutting.

Material:
- HSS solid softwood
- HM solid hardwood, glued wood, chipboard, MDF

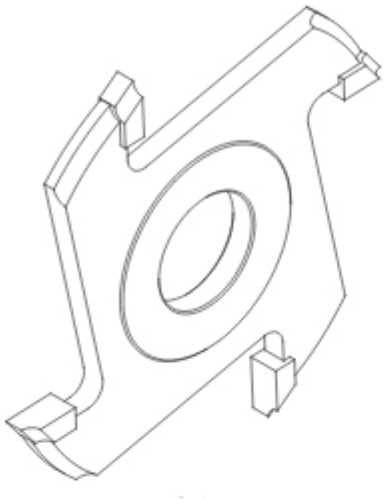



R = B - 5

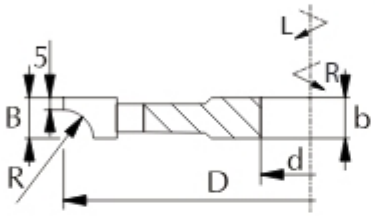

D n d	100 9000 30		125 9000 40		140 6000 50		160 6000 60	
B mm	HSS	HM	HSS	HM	HSS	HM	HSS	HM
8	+	+	+	+	+	+	+	+
9	+	+	+	+	+	+	+	+
10	+	+	+	+	+	+	+	+
11	+	+	+	+	+	+	+	+
13	+	+	+	+	+	+	+	+
15	+	+	+	+	+	+	+	+
17	+	+	+	+	+	+	+	+
20	+	+	+	+	+	+	+	+
25			+	+			+	+
30							+	+

MDF

Catalogue number right	Catalogue number left	Type	D mm	B mm	b mm	d mm	R mm	z		
P101W125P0009	P101W125L0009	P-101	125	8	7	30	3	4	HM	•
P101S125P0016	P101S125L0016	P-101	125	10	9	30	5	4	HSS	•
P101W125P0001	P101W125L0001	P-101	125	10	9	30	5	4	HM	•
P101W125P0003	P101W125L0003	P-101	125	11	10	30	6	4	HM	•
P101S125P0003	P101S125L0003	P-101	125	13	12	30	8	4	HSS	•
P101W125P0004	P101W125L0004	P-101	125	13	12	30	8	4	HM	•
P101S125P0005	P101S125L0005	P-101	125	15	14	30	10	4	HSS	•
P101W125P0005	P101W125L0005	P-101	125	15	14	30	10	4	HM	•
P101W125P0006	P101W125L0006	P-101	125	17	16	30	12	4	HM	•
P101S125P0004	P101S125L0004	P-101	125	20	19	30	15	4	HSS	•
P101W125P0007	P101W125L0007	P-101	125	20	19	30	15	4	HM	•
P101S125P0001	P101S125L0001	P-101	125	25	24	30	20	4	HSS	•
P101W125P0008	P101W125L0008	P-101	125	25	24	30	20	4	HM	•
P101S140P0004	P101S140L0004	P-101	140	30	29	30	25	4	HSS	•
P101W140P0007	P101W140L0007	P-101	140	30	26	30	25	4	HM	•

Profile cutter diameter (D) may change - more information on page 3.15

Brazed profiled cutter, type **P-102** or **P-103** with four cutting teeth, designed for professional machining of wood and wood-based materials such as chipboard, MDF and others. The cutter is used for edge rounding with radius R according to client's request.

Material:

HSS solid softwood

HM solid hardwood, glued wood, chipboard, MDF





P-102 4.0 R or L

Type of work: edge rounding

D n d	100 9000 30		125 9000 40		140 6000 50		160 6000 60	
B mm	HSS	HM	HSS	HM	HSS	HM	HSS	HM
10	+	+	+	+	+	+	+	+
15	+	+	+	+	+	+	+	+
20	+	+	+	+	+	+	+	+
25	+	+	+	+	+	+	+	+
30	+	+	+	+	+	+	+	+
35	+	+	+	+	+	+	+	+
40	+	+	+	+	+	+	+	+
45	+	+	+	+	+	+	+	+
50	+	+	+	+	+	+	+	+

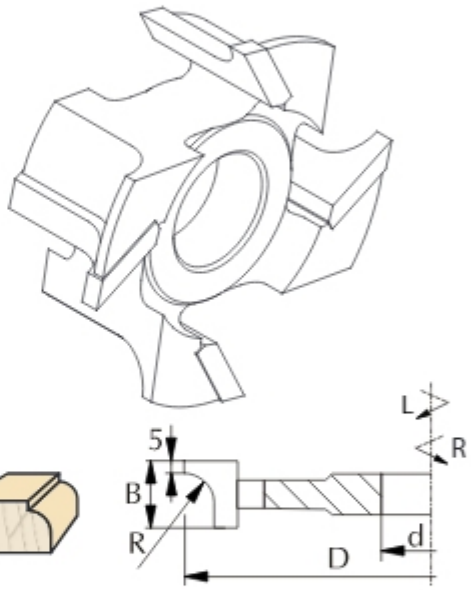

P-103 4.0

Type of work: two-sided edge rounding

D n d	100 9000 30		125 9000 40		140 6000 50	
B mm	HSS	HM	HSS	HM	HSS	HM
25	+	+	+	+	+	+
30	+	+	+	+	+	+
35	+	+	+	+	+	+
40	+	+	+	+	+	+
45	+	+	+	+	+	+
50	+	+	+	+	+	+

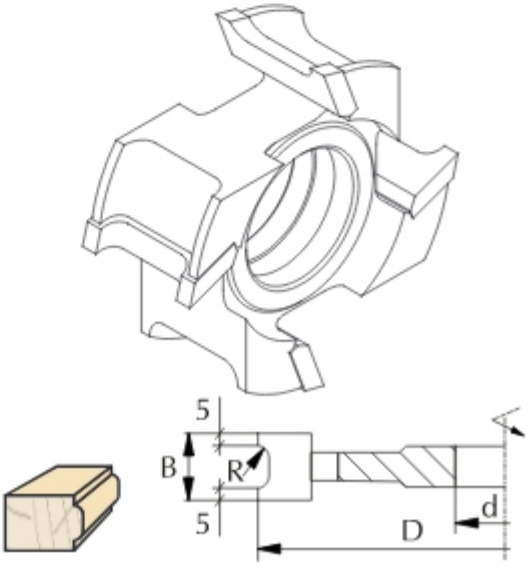

Profile cutter diameter (D) may change - more information on page 3.15

P-105 4.0

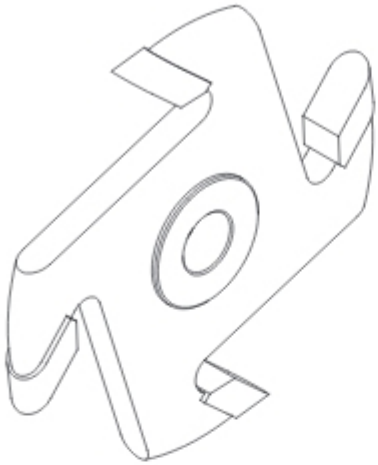

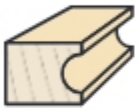

B = 2 × R

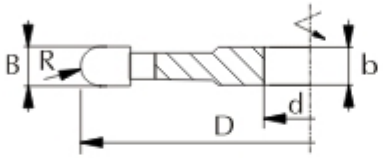

Brazed profiled cutter, type **P-105** with four cutting teeth, designed for professional machining of wood and wood-based materials such as chipboard, MDF and others. The cutter is used for grooving semi-circles with radius R according to client's request.

Type of work: grooving semi-circles with radius R.

Material:

- HSS solid softwood
- HM solid hardwood, glued wood, chipboard, MDF





D / d		100 9000 30		125 9000 40		140 6000 50		160 6000 60		180 6000 60	
B mm	R mm	HSS	HM	HSS	HM	HSS	HM	HSS	HM	HSS	HM
6	3	+	+	+	+	+	+	+	+	+	+
8	4	+	+	+	+	+	+	+	+	+	+
10	5	+	+	+	+	+	+	+	+	+	+
12	6	+	+	+	+	+	+	+	+	+	+
16	8	+	+	+	+	+	+	+	+	+	+
20	10	+	+	+	+	+	+	+	+	+	+
24	12	+	+	+	+	+	+	+	+	+	+
30	15	+	+	+	+	+	+	+	+	+	+
40	20			+	+	+	+	+	+	+	+
50	25					+	+	+	+	+	+

Catalogue number	Type	D mm	B mm	b mm	d mm	R mm	z		
P105W125-0001	P-105	125	8	8	30	4	4	HM	•
P105W125-0002	P-105	125	10	10	30	5	4	HM	•
P105W125-0003	P-105	125	12	12	30	6	4	HM	•
P105W125-0004	P-105	125	16	16	30	8	4	HM	•
P105W125-0005	P-105	125	20	18	30	10	4	HM	•
P105W125-0006	P-105	125	24	22	30	12	4	HM	•
P105W125-0007	P-105	125	30	28	30	15	4	HM	•

Profile cutter diameter (D) may change - more information on page 3.15

P-106 4.0 R or L

Brazed profiled cutter, type **P-106** with four cutting teeth, designed for professional machining of wood and wood-based materials such as chipboard, MDF and others. The cutter is used for grooving quarter-circles with radius R according to client's request.

Type of work: grooving quarter-circles with radius R.

Material:
- HSS solid softwood
- HM solid hardwood, glued wood, chipboard, MDF

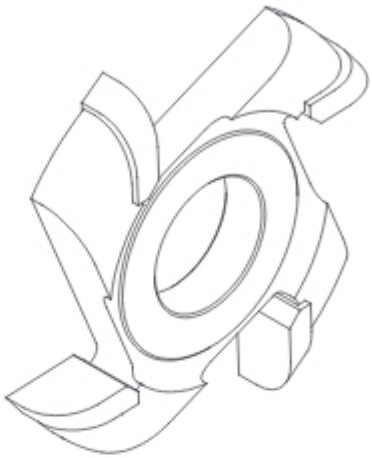

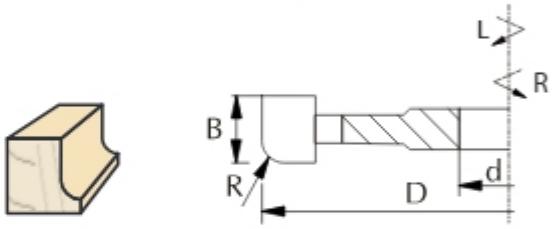





D n d	100 9000 30		125 9000 40		140 6000 50	
B mm	HSS	HM	HSS	HM	HSS	HM
10	+	+	+	+	+	+
15	+	+	+	+	+	+
20	+	+	+	+	+	+
25	+	+	+	+	+	+
30	+	+	+	+	+	+
35	+	+	+	+	+	+
40	+	+	+	+	+	+

Profile cutter diameter (D) may change - more information on page 3.15

P-107 4.0

Brazed profiled cutter, type **P-107** with four cutting teeth, designed for professional machining of wood and wood-based materials such as chipboard, MDF and others. The cutter is used for making semi-rounds with radius R according to client's request.

Type of work: profiling semi-rounds with radius R.

Material:

HSS solid softwood

HM solid hardwood, glued wood, chipboard, MDF

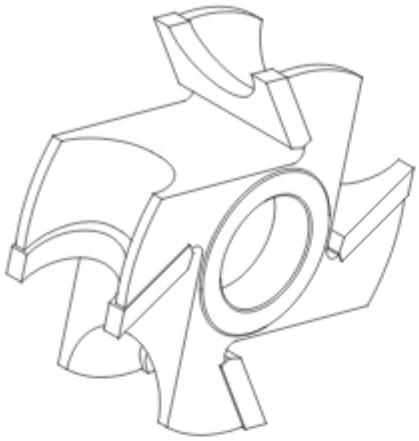



$B = 2 \times R + 10$

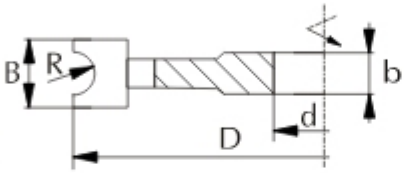





D n d		100 9000 30		125 9000 40		140 6000 50		160 6000 60	
B mm	R mm	HSS	HM	HSS	HM	HSS	HM	HSS	HM
16	3	+	+	+	+	+	+	+	+
18	4	+	+	+	+	+	+	+	+
20	5	+	+	+	+	+	+	+	+
22	6	+	+	+	+	+	+	+	+
26	8	+	+	+	+	+	+	+	+
30	10	+	+	+	+	+	+	+	+
34	12	+	+	+	+	+	+	+	+
40	15			+	+	+	+	+	+
50	20			+	+			+	+
60	25							+	+

Catalogue number	Type	D mm	B mm	b mm	d mm	R mm	z		
P107W125-0003	P-107	125	22	22	30	6	4	HM	•
P107W125-0004	P-107	125	26	26	30	8	4	HM	•
P107W125-0005	P-107	125	30	30	30	10	4	HM	•
P107W125-0006	P-107	125	34	34	30	12	4	HM	•
P107W125-0007	P-107	125	40	40	30	15	4	HM	•
P107W125-0008	P-107	125	50	50	30	20	4	HM	•

Profile cutter diameter (D) may change - more information on page 3.15

P-109 4.0

Brazed profiled cutter, type **P-109** with four cutting teeth, designed for professional machining of wood and wood--based materials such as chipboard, MDF and others. The cutter is used for making multiple-dowels with radius R according to client's request.

Type of work: profiling multiple dowels with radius R.

Material:

HSS solid softwood

HM solid hardwood, glued wood, chipboard, MDF

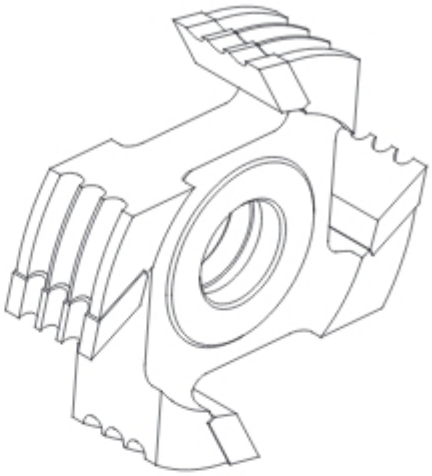



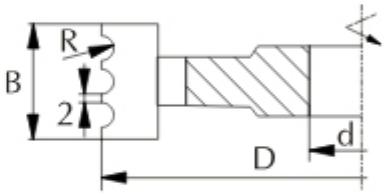





D mm	B mm	d	R mm	z		n	
125	32	40	3 x R3	4	HSS	9000	+
125	32	40	3 x R3	4	HM	9000	+
125	38	40	3 x R4	4	HSS	9000	+
125	38	40	3 x R4	4	HM	9000	+
125	44	40	3 x R5	4	HSS	9000	+
125	44	40	3 x R5	4	HM	9000	+
125	36	40	2 x R6	4	HSS	9000	+
125	36	40	2 x R6	4	HM	9000	+
125	44	40	2 x R8	4	HSS	9000	+
125	44	40	2 x R8	4	HM	9000	+

P-116 4.0

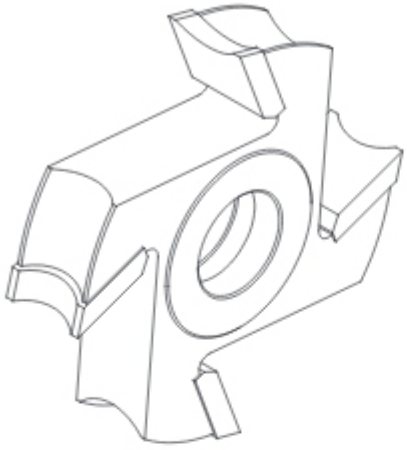

Brazed profiled cutter, type **P-116** with four cutting teeth, designed for professional machining of wood and wood--based materials such as chipboard, MDF and others. The cutter is used for edge rounding with radius R according to client's request.

Type of work: edge rounding.

Material:

- HSS solid softwood
- HM solid hardwood, glued wood, chipboard, MDF

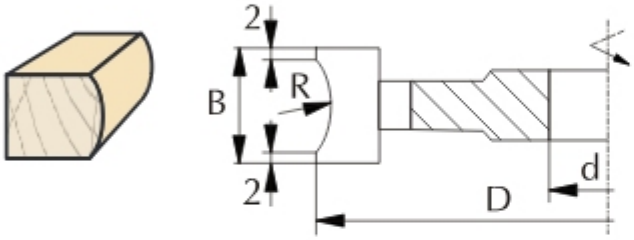





D d z n	100 9000 30		125 9000 40		140 6000 50	
B mm	HSS	HM	HSS	HM	HSS	HM
20	+	+	+	+	+	+
30	+	+	+	+	+	+
40	+	+	+	+	+	+
50	+	+	+	+	+	+

Profile cutter diameter (D) may change - more information on page 3.15

FDR-01 4.0

Brazed profile cutter, type **FDR-01** with four cutting teeth, designed for professional machining of wood. The cutter is used for fluting flat surfaces.

Type of work: profiling flat surfaces.

Material: solid wood.

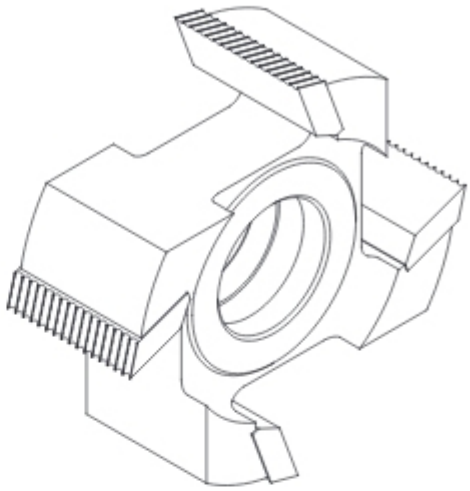

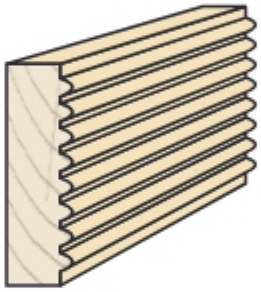

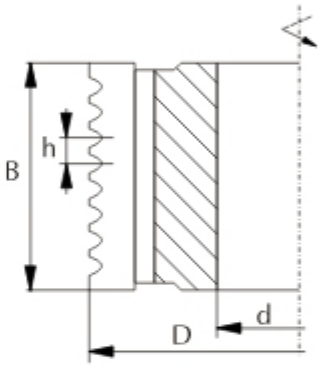





D n d z		100 9000 30 4	125 9000 40 4	140 6000 50 4
B mm	h mm	HSS	HSS	HSS
65	3	+	+	+
65	4	+	+	+
85	3	+	+	+
85	4	+	+	+
105	3	+	+	+
105	4	+	+	+

FDKO

Brazed straight cutter, type **FDKO**, designed for profiling wooden dowel pins with round profile of various dimensions.

Type of work: longitudinal.

Material: solid soft wood.

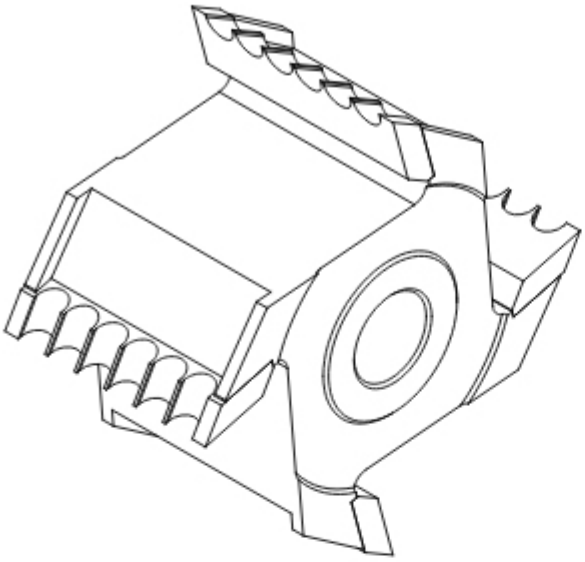

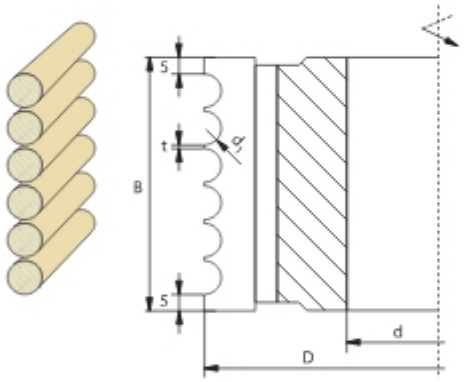

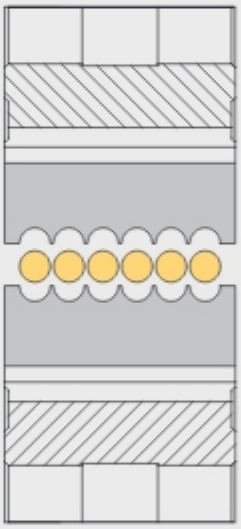

D mm n_{max} d_1 mm t_{min} mm Max. pins number	125 9000 3 1 12	125 9000 4 1 12	125 9000 5 1 10	125 9000 6 1 10	125 9000 8 1 8	125 9000 10 1 8	125 9000 12 1,5 6	125 9000 15 1,5 6	140 6000 18 1,5 5	140 6000 20 2 4	140 6000 25 2 3	140 6000 30 2 3
Profile FDKO	+	+	+	+	+	+	+	+	+	+	+	+

When ordering FDKO cutters, please give tool dimensions (D, d, z) a well as type of material, number of pins, their diameter (d1) and distance between pins (t).

FDKR

Brazed straight cutter, type FDKR, designed for profiling wooden dowel pins with serrated profile of various dimensions.

Type of work: longitudinal.

Material: solid soft wood.

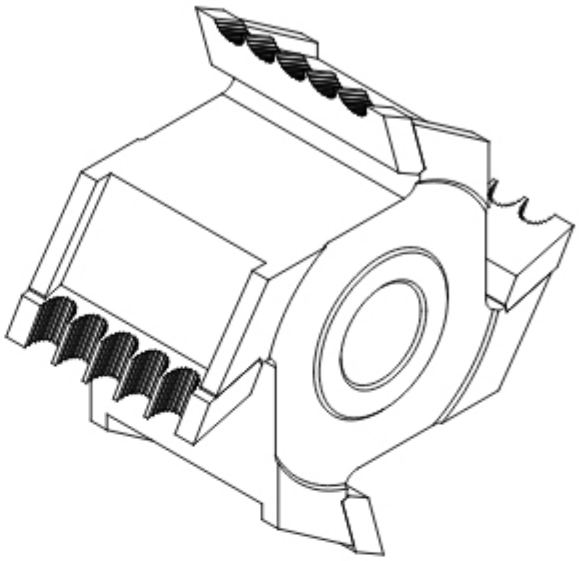

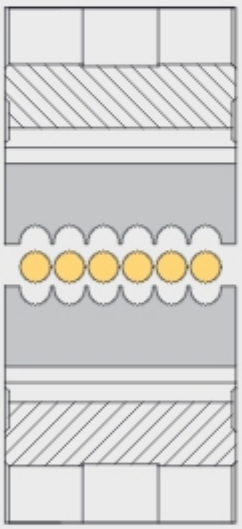

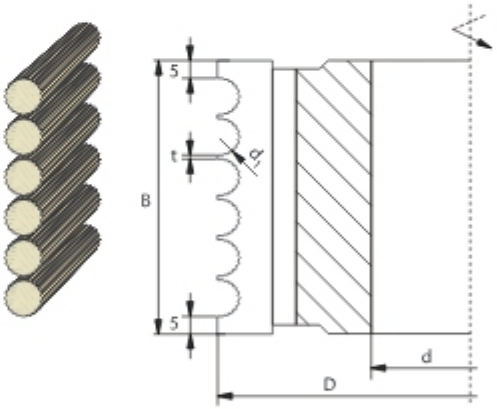

D mm n_{max} d_1 mm t_{min} mm Max. pins number	125 9000 6 1 10	125 9000 8 1 8	125 9000 10 1 8	125 9000 12 1,5 6	125 9000 15 1,5 6	140 6000 18 1,5 5	140 6000 20 2 4	140 6000 25 2 3	140 6000 30 2 3
Profile FDKR	+	+	+	+	+	+	+	+	+

When ordering FDKR cutters, please give tool dimensions (D, d, z) a well as type of material, number of pins, their diameter (d1) and distance between pins (t).

Diameters

Outer diameter of angle cutter (D) is tightly connected with and depends on bore diameter (d), cutter width (B) and angle (α).
In order to determine the minimum diameter of angle cutter, the following diagram should be used.

Diagram is valid for bore d=30 mm
For bore 40 mm: D + 10 mm
For bore 50 mm: D + 20 mm

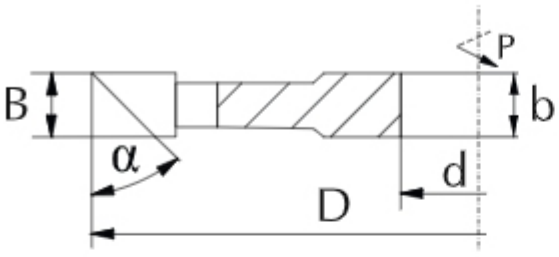

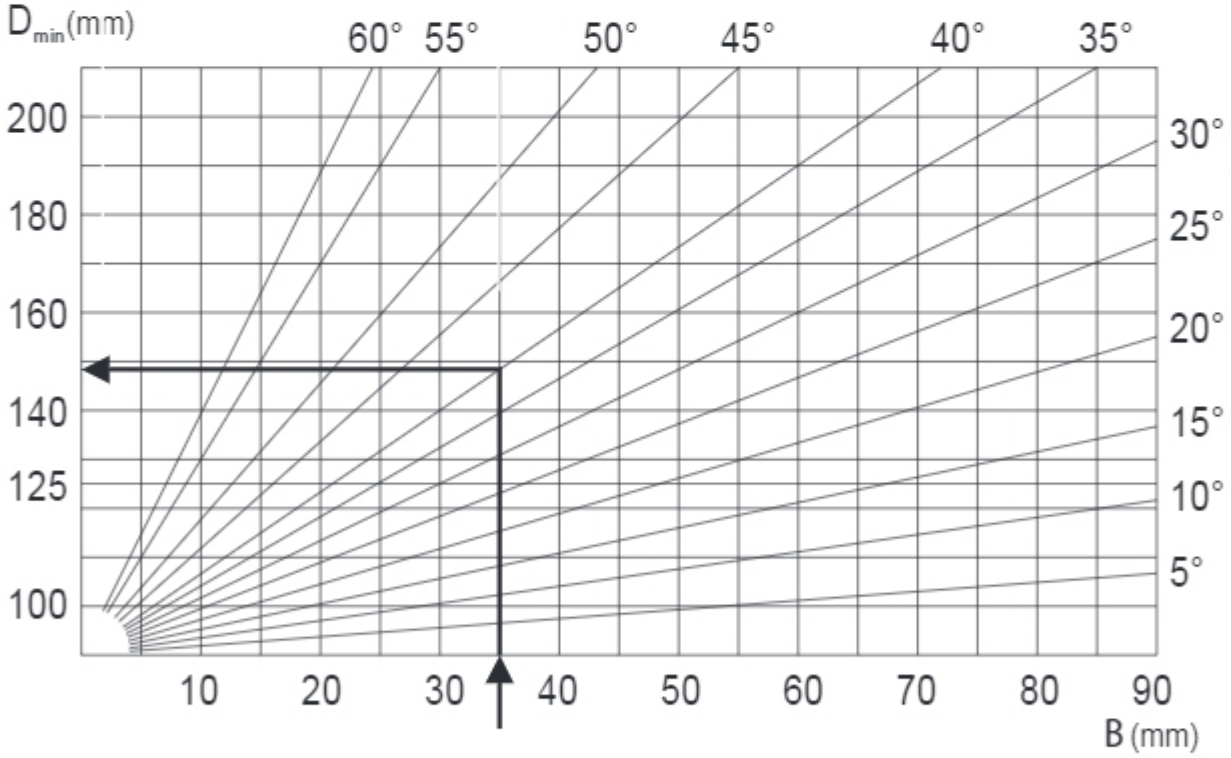

Example:

B = 35 mm
α = 40°
d = 30 mm
according to diagram D_{min} = 148 mm
Round for nearest typical bigger than D_{min} D = 160 mm

1201 4.1∢45°

Brazed profile cutter, type **1201** with four cutting teeth and shear angle, designed for professional machining of wood and wood-based materials such as chipboard, MDF and others. The cutter is used for edge beveling of the machined elements.

Type of work: edge beveling at 45° angle.

Material:
- HSS solid softwood
- HM solid hardwood, glued wood, chipboard, MDF

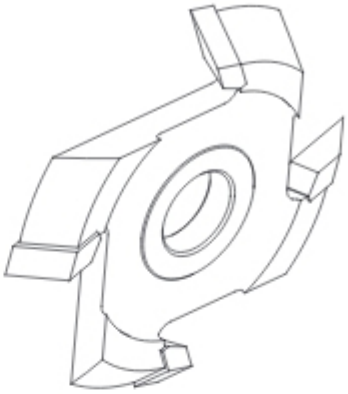

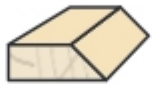

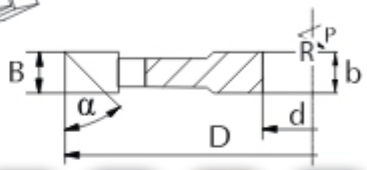





D / n / d	100 9000 25		125 9000 35		160 6000 40	
B mm	HSS	HM	HSS	HM	HSS	HM
10	+	+	+	+	+	+
15	+	+	+	+	+	+
20			+	+	+	+
25			+	+	+	+
30					+	+

Catalogue number	Type	D mm	B mm	b mm	d mm	z			∢	
1201W125P0001	1201	125	10	10	40	4	HM	45°	R	•
1201W125L0001	1201	125	10	10	40	4	HM	45°	L	•
1201S125P0001	1201	125	25	24,5	30	4	HSS	45°	R	•
1201S125L0001	1201	125	25	24,5	30	4	HSS	45°	L	•
1201W125P0002	1201	125	25	24,5	30	4	HM	45°	R	•
1201W125L0004	1201	125	25	24,5	30	4	HM	45°	L	•

1201 4.1∢30° or ∢15° R or L

Type of work: edge beveling at 30° or 15° angle

D / n / d	100 9000 25 15°		100 9000 25 30°		125 9000 30 15°		125 9000 30 30°		160 6000 40 15°		160 6000 40 30°	
B mm	HSS	HM	HSS	HM	HSS	HM	HSS	HM	HSS	HM	HSS	HM
10	+	+	+	+	+	+	+	+	+	+	+	+
15	+	+	+	+	+	+	+	+	+	+	+	+
20	+	+	+	+	+	+	+	+	+	+	+	+
25					+	+	+	+	+	+	+	+

Angle cutter diameter may change - more information on page 3.26.

3110 6.0

Brazed straight cutter, type **3110** with six cutting teeth, designed for professional machining of wood and wood--based materials such as chipboard, MDF and others. The cutter is used for removing veneer overplus and machining flat surfaces.

Type of work: removing veneer overplus.

Material: solid hardwood, glued wood, chipboard, MDF.





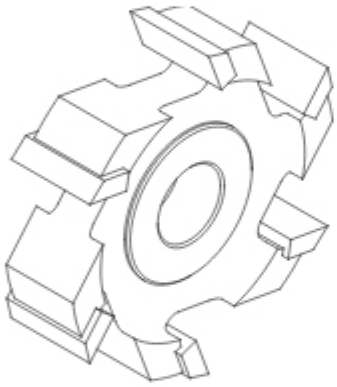

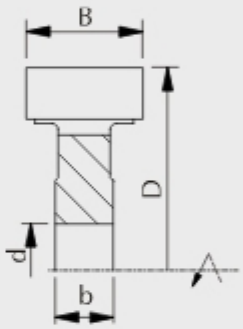

Catalogue number	Type	D mm	B mm	b mm	d mm	z		
3110W070-0019	3110	70	20	10	16	6	HM	+

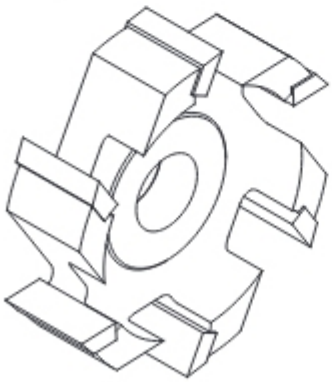

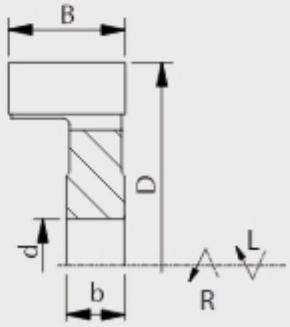

Catalogue number	Type	D mm	B mm	b mm	d mm	z			
3110W070P0001	3110	70	20	10	16	6	HM	R	+
3110W070L0001	3110	70	20	10	16	6	HM	L	+

3110 HSK25

Brazed straight cutter, type **3110 HSK25** with four cutting teeth and shear angle, designed for professional machining of wood and wood-based materials such as chipboard, MDF and others. The cutter is used for removing veneer overplus and machining flat surfaces.
HSK25 clamping guarantees precise tool positioning. Shear angle enabling optimal chip flow allows for high quality of the machined surface.

Type of work: removing veneer overplus and machining flat surfaces.

Material: solid hardwood, glued wood, chipboard, MDF.

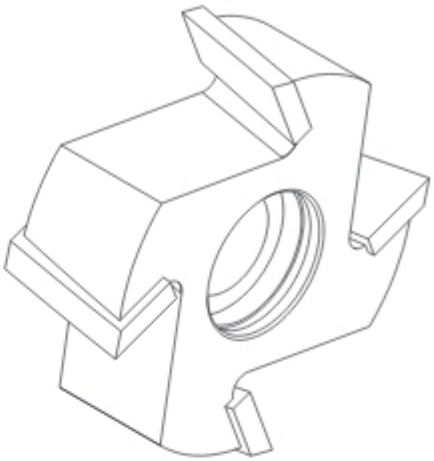

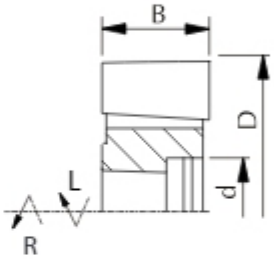



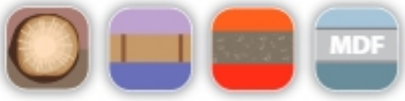

Catalogue number	Type	D mm	B mm	d	z		n_{max}		
F52-0048WP	3110	70	25	HSK25	4	HM	18000	R	+
F52-0048WL	3110	70	25	HSK25	4	HM	18000	L	+
F52-0032WP	3110	70	35	HSK25	4	HM	18000	R	+
F52-0032WL	3110	70	35	HSK25	4	HM	18000	L	+

F56-A 6.1



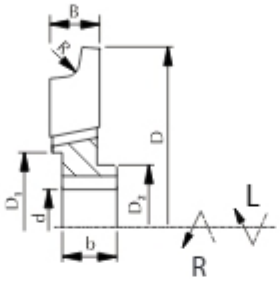

Brazed profile cutter, type **F56-A** with six cutting teeth and shear angle, designed for professional machining of wood and wood-based materials such as chipboard, MDF and others. The cutter is used for edge rounding with radius according to client's request. Shear angle enabling optimal chip flow allows for high quality of the machined surface.

Type of work: edge rounding with radius R.

Material: solid hardwood, glued wood, chipboard, MDF.





Catalogue number	Type	D mm	D_1 mm	D_2 mm	B mm	b mm	d mm	R mm	z	n_{max}		
F56-0055WP	F56	73	30	25	10	11	16	3	6	18000	R	+
F56-0055WL	F56	73	30	25	10	11	16	3	6	18000	L	+

F56-B 6.0

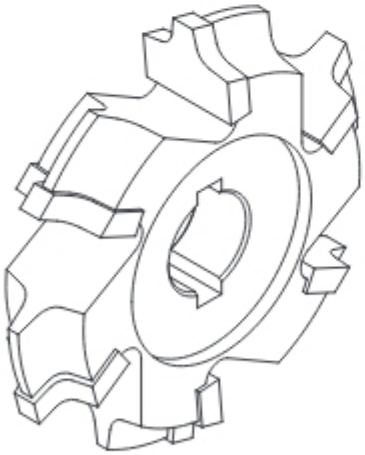

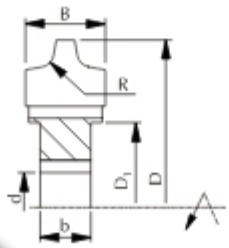

Brazed profile cutter, type **F56-B** with six cutting teeth and shear angle, designed for professional machining of wood and wood-based materials such as chipboard, MDF and others. The cutter is used for two-sided edge rounding with radius according to client's request.

Type of work: edge rounding with radius R.

Material: solid hardwood, glued wood, chipboard, MDF.





Catalogue number	Type	D mm	D_1 mm	B mm	b mm	d mm	R mm	z	n_{max}	
F56-0056W	F56	73	37	17,4	11	16	3	6	18000	+

FL-01

Brazed profile cutter, type **FL-01** with four or six cutting teeth and alternative shear angle, designed for professional machining of wood and glued wood. The cutter is used for repairing resin pockets. Alternative shear angle enabling optimal chip flow allows for high quality of the machined surface.

Type of work: repairing resin pockets.

Material:
- HSS solid softwood
- HM solid hardwood, glued wood

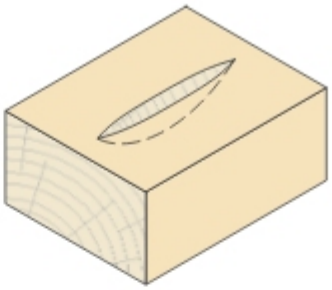





FL-01-A 4.2

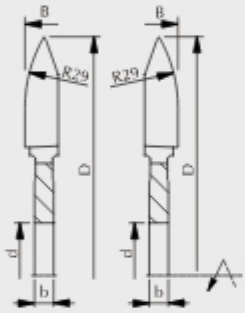



Catalogue number	Type	D mm	B mm	b mm	d mm	z		
FL01S100-001	FL-01-A	100	8	4	22	4	HSS	•
FL01W100-001	FL-01-A	100	8	4	22	4	HM	•

FL-01-B 6.2

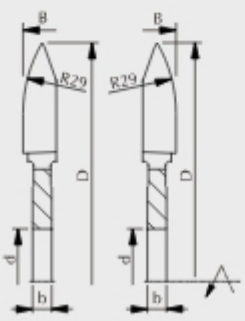



Catalogue number	Type	D mm	B mm	b mm	d mm	z		
FL01S100-006	FL-01-B	100	8	4	22	6	HSS	+
FL01W100-006	FL-01-B	100	8	4	22	6	HM	+

PATE 01

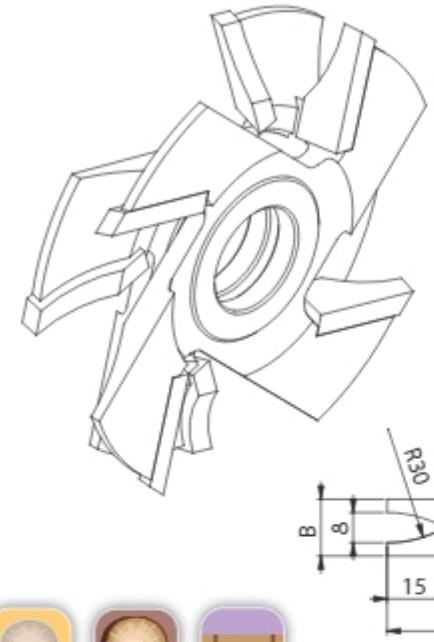

Set of brazed profile cutters type **PATE 01** with four cutting teeth and shear angle, designed for professional machining of wood and glued wood. The cutter is used for repairing resin pockets. Special construction of the set and shear angle allow for high quality of the machined surface. Special geometry enables working together with profile cutters type FL-01.

Type of work: machining resin pockets fillings.

Material:
- HSS solid softwood
- HM solid hardwood, glued wood

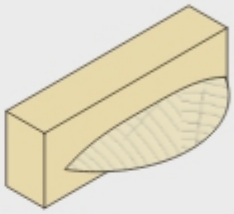

Catalogue number	Type	D mm	B mm	b mm	d mm	z		n_{max}	
PATE-01-00W	PATE 01	90	15	12	16	4	HM	12000	+

PATE 09

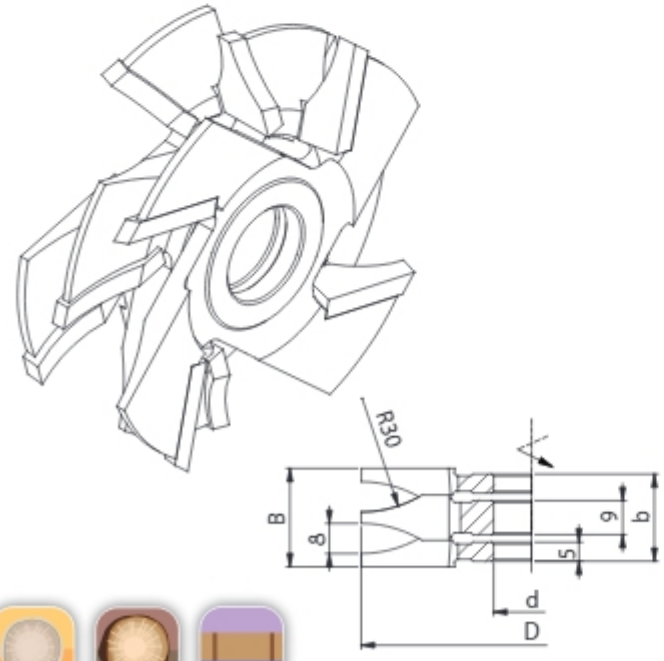

Set of brazed profile cutters type **PATE 09** with four cutting teeth and shear angle, designed for professional machining of wood and glued wood. The cutter is used for repairing resin pockets. Special construction of the set and shear angle allow for high quality of the machined surface. Special geometry enables working together with profile cutters type FL-01. The set machines two elements with the same dimensions at the same time.

Type of work: machining resin pockets fillings.

Material:
- HSS solid softwood
- HM solid hardwood, glued wood

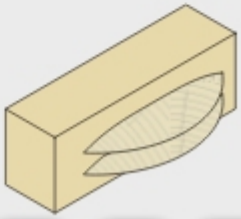

Catalogue number	Type	D mm	B mm	b mm	d mm	z		n_{max}	
PATE-09-00W	PATE 09	90	26	23	16	4	HM	12000	+

PATE 10

Set of brazed profile cutters type **PATE 10** with four cutting teeth and shear angle, designed for professional machining of wood and glued wood. The cutter is used for repairing resin pockets. Special construction of the set and shear angle allow for high quality of the machined surface. Special geometry enables working together with profile cutters type FL-01. The set machines several elements with various depth at the same time.

Type of work: machining resin pockets fillings.

Material:

HSS solid softwood

HM solid hardwood, glued wood

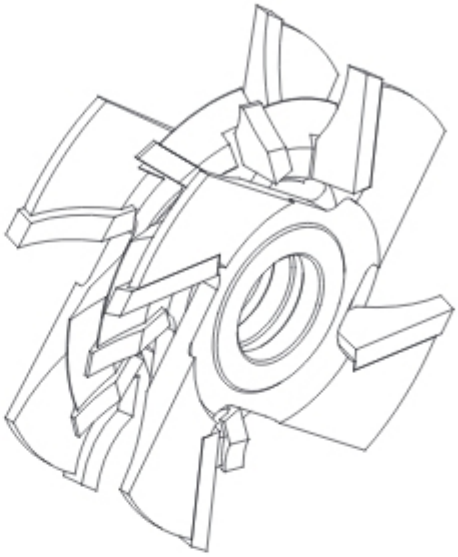

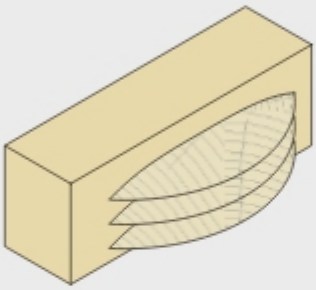

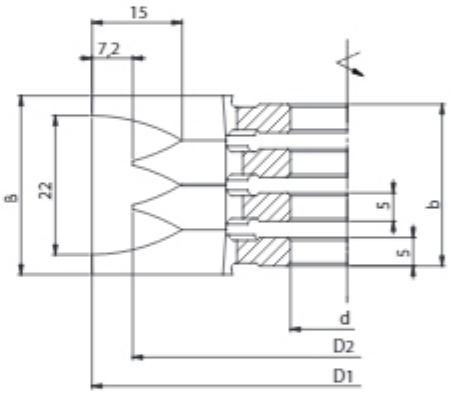





Catalogue number	Type	D_1 mm	D_2 mm	B mm	b mm	d mm	z		n_{max}	
PATE-10-00W	PATE 10	90	75,6	29	26	16	4	HM	12000	+

Sets of cutters

Brazed profile cutter sets designed for professional machining of solid wood, for tongue-groove joints (wainscots, parquet, floor board, casing board) and wood-based materials such as chipboard, MDF etc., for furniture door machining, edge rounding and others.

Sets for making tongue-groove joints are designed for working on 2 spindle machines with feed speed up to 30 m/min. The set includes spacer rings allowing for proper adjustment of tongue-groove width. Optionally, we offer the sets with shear angle mounted on hydro sleeves designed for professional, very precise machining of solid wood and other wood-based materials with feed speed up to 200 m/min.

On request, we suggest, design and manufacture the proper set of cutters for the required type of work, material and machine as well as parameters and conditions of work.

Cutting diagrams

As standard, we offer the sets according to diagram 1. On client's request we offer also the sets according to diagram 2.

Diagram 1

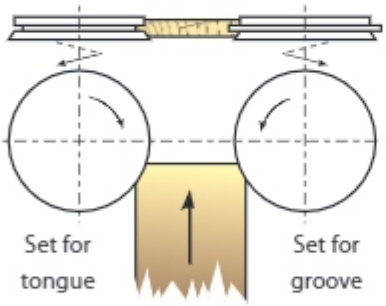

Standard

Diagram 2

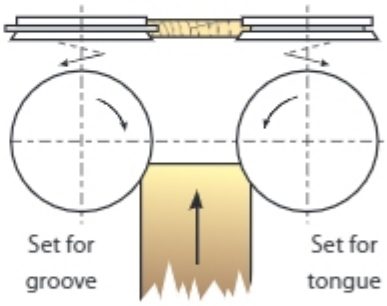

On request

Sets of cutters coding system

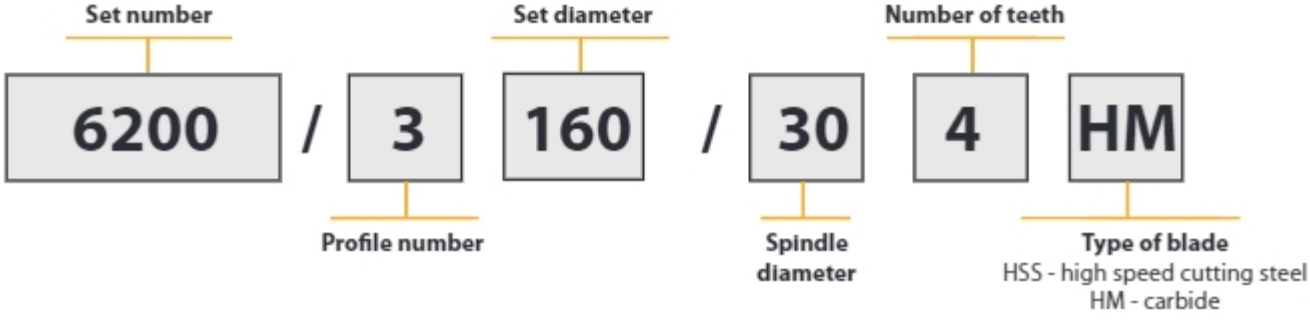

6200

Set of brazed profile cutters type **6200** with four cutting teeth, designed for professional machining of solid wood. The set is used for making tongue and groove in wainscots production. Width is regulated with spacer rings included in the set. The set can work on 2-spindle machines.

Type of work: longitudinal profiling of tongue and groove.

Material:
- HSS solid softwood
- HM solid hardwood

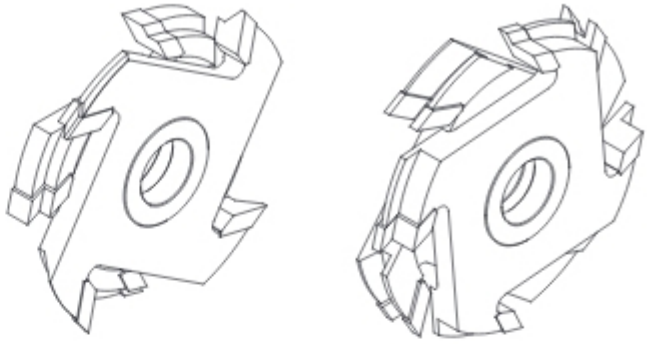

Profile 1

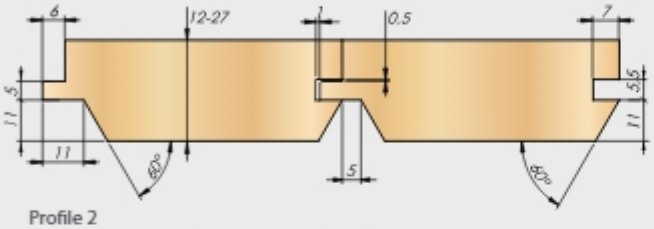

Profile 2

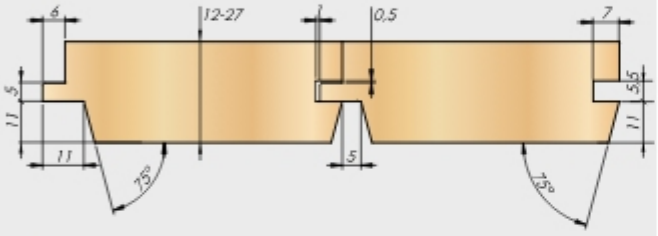

Profile 3

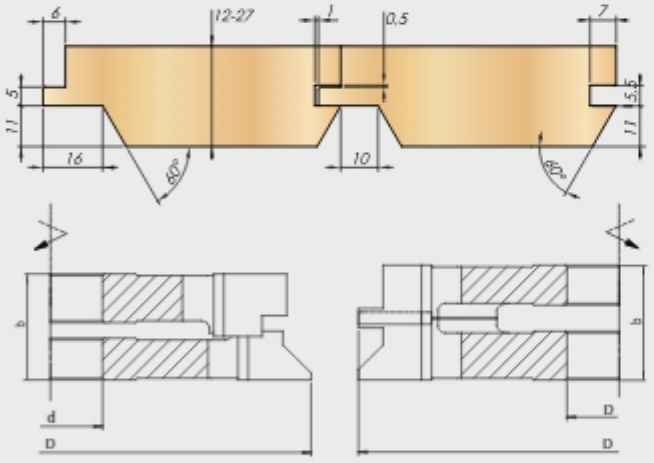

D mm	d_{max} mm	n_{max}	
125	30	9000	+
140	40	9000	+
160	40	9000	+

Profile 1a

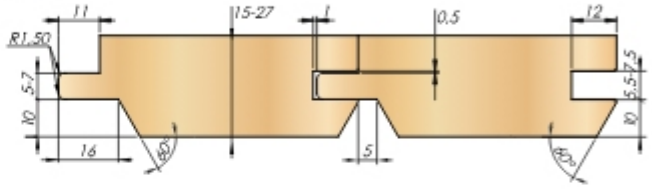

Profile 2a

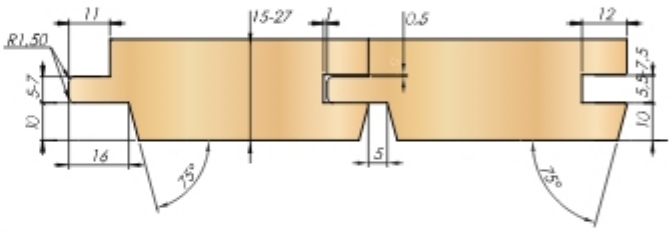

Profile 3a

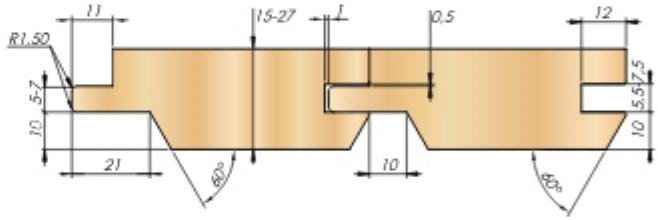

Profile 4

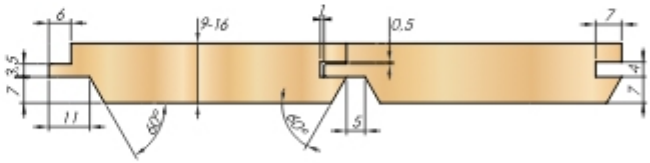

Profile 5

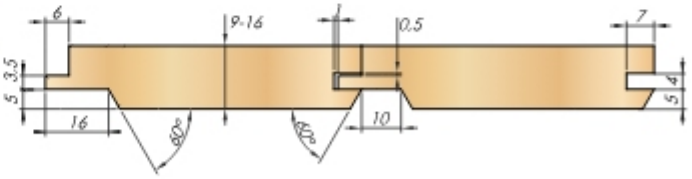

Catalogue number	Type	Profile	D mm	d mm	b mm	z		n_{max}	
B0100S140A0001	6200	1	140	40	29	4	HSS	9000	+
B0100S150A0001	6200	1a	150	40	36	4	HSS	9000	•
B0300S140A0003	6200	3	140	40	29	4	HSS	9000	+

* Profiles 4 and 5 are made as HM in set with scoring saw blade for groove.

6200

Profile 6

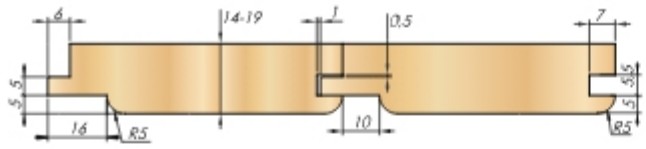

Profile 6a

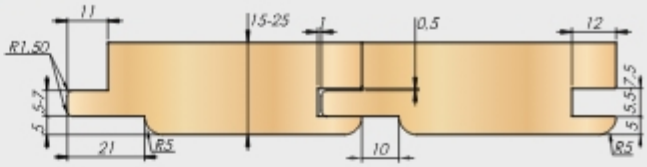

Profile 7

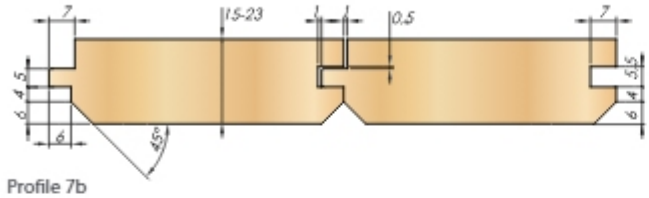

Profile 7a

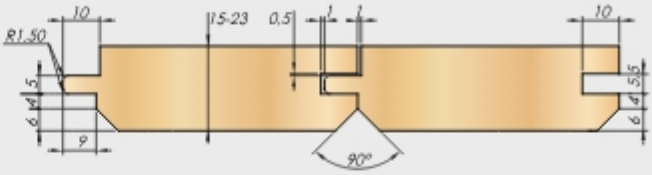

Profile 7b

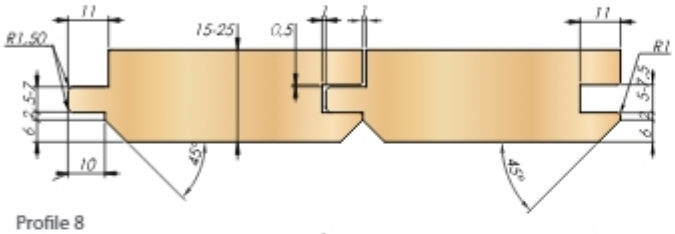

Profile 8

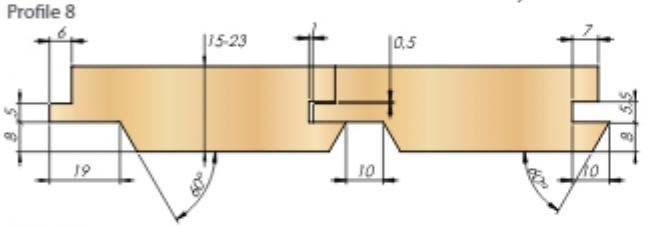

Profile 8a

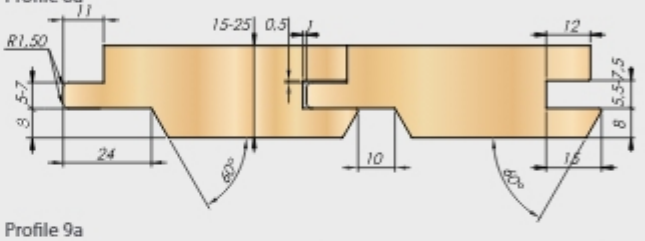

Profile 9

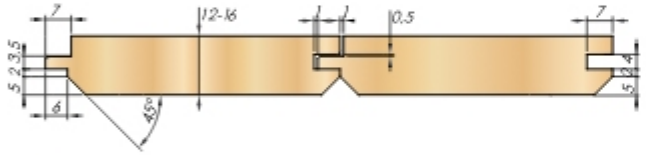

Profile 9a

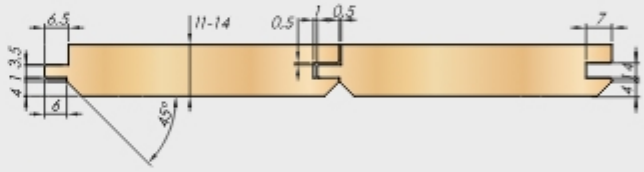

Profile 19

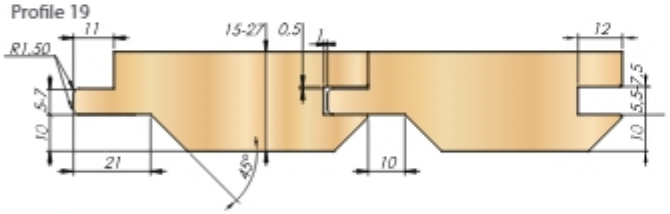

Profile 19a

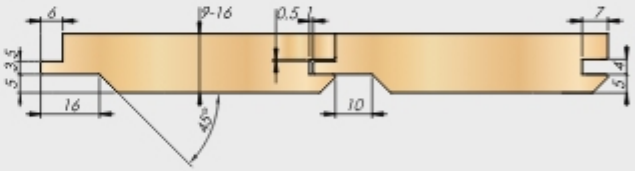

Profile 20

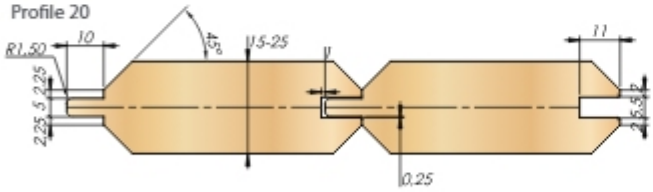

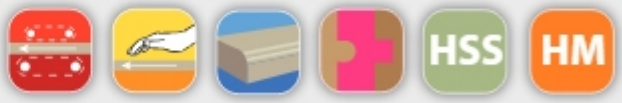

Catalogue number	Type	Profile	D mm	d mm	b mm	z		n_{max}	
B0600S140A0003	6200	6	140	40	29	4	HSS	9000	+
B0600S160A0023	6200	6a	160	40	36	4	HSS	9000	•
B0700S125A0002	6200	7	125	30	31	4	HSS	9000	•
B0700S140A0004	6200	7	140	40	31	4	HSS	9000	•
B0700W140A0003	6200	7	140	40	31	4	HM	9000	+
B0700S160A0021	6200	7b	160	40	34	4	HSS	9000	•
B0700W160A0005	6200	7b	160	40	34	4	HM	9000	•
B0800S160A0008	6200	8a	160	40	34	4	HSS	9000	•
B1900S170A0001	6200	19	170	40	36	4	HSS	9000	•
B2000S160-0001	6200	20	160	40	35	4	HSS	9000	•

* Profile 9 made as HM in set with scoring saw blade for groove.

6200-2

Set of brazed profile cutters type **6200-2** with four cutting teeth, designed for professional machining of solid wood. The set is used for making tongue and groove in profile wainscots production. Width is regulated with spacer rings included in the set. The set can work on 4-spindle machines.

Type of work: longitudinal profiling of tongue and groove.

Material:
- HSS solid softwood
- HM solid hardwood

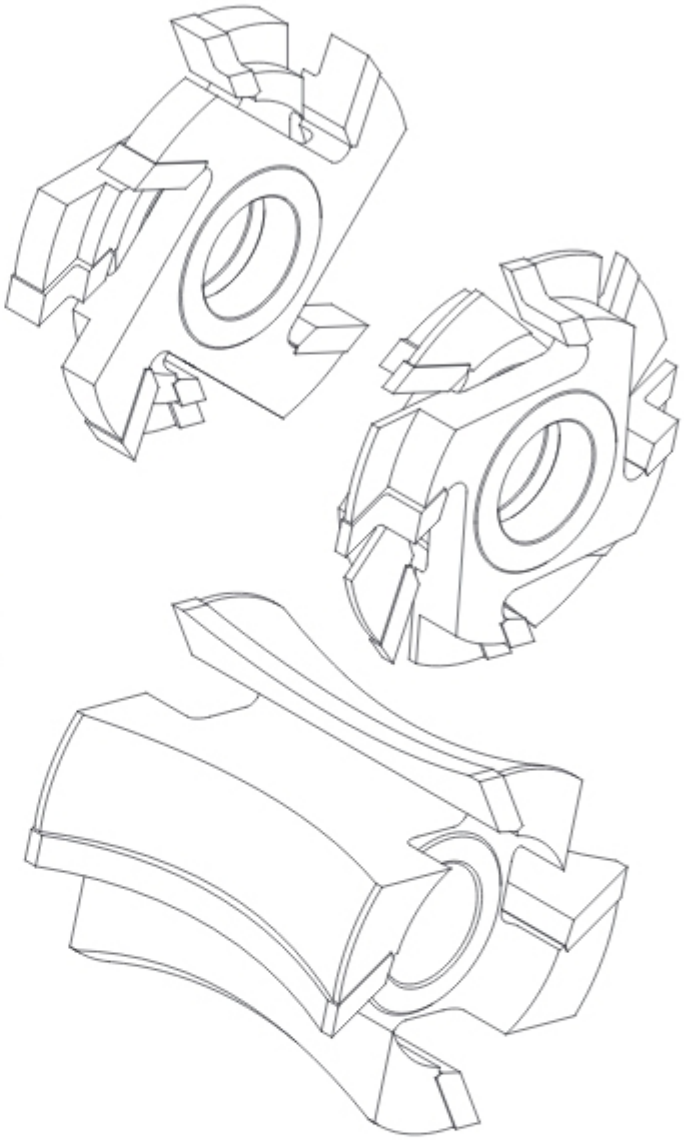

D mm	d mm	n max	
140	40	6000	+
160	40	6000	+

Profile 14

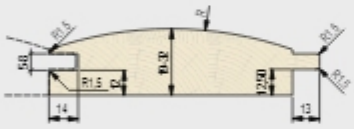

Profile 15

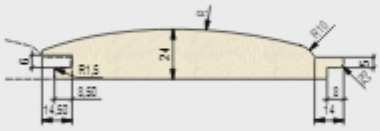

Profile 16

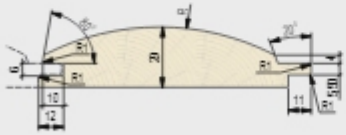

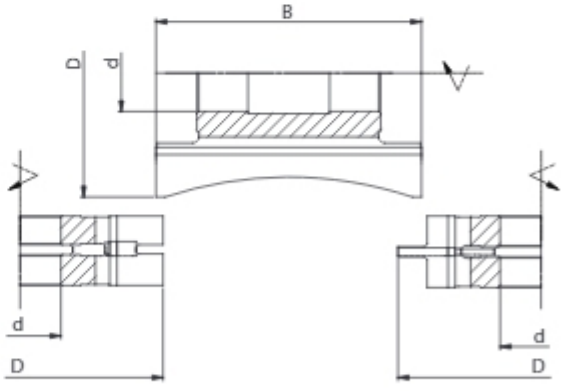

Catalogue number	Type	Profile	D mm	B mm	R mm	d mm	z		n max	
F01-1283-00SP	6200-2	16	140	121	120,9	40	4	HSS	9000	+
F02-0946-00S	6200-2	14	140	130	176	40	4	HSS	9000	+
F04-0800-00BSP	6200-2	15	140	153	237	40	4	HSS	9000	+

6200

Set of brazed profile cutters type **6200** with four cutting teeth, designed for professional machining of solid wood. The set is used for making tongue and groove in floor board production. Width is regulated with spacer rings included in the set. The set can work on 2-spindle machines.

Type of work: longitudinal profiling of tongue and groove.

Material:

HSS solid softwood

HM solid hardwood

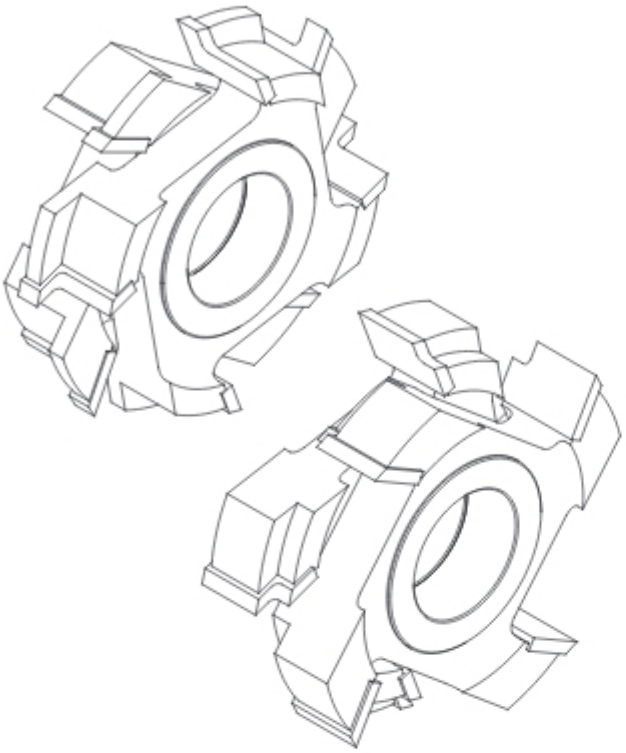

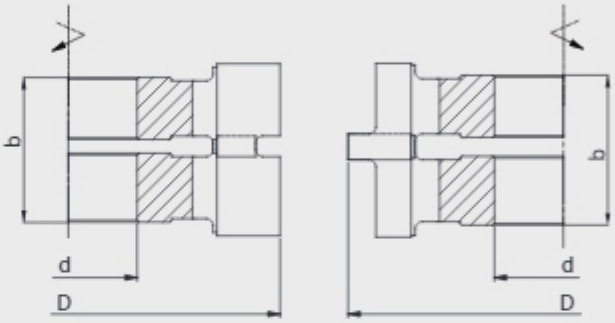

Profile 10

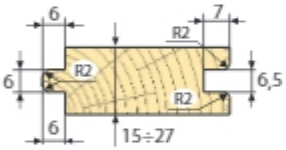

Profile 11

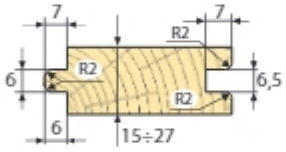

Profile 12

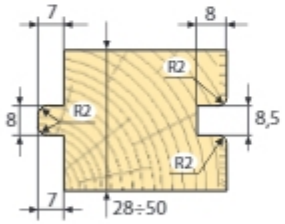

Profile 13

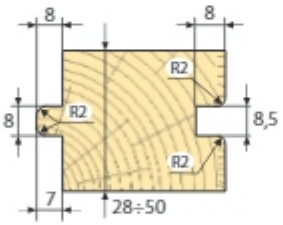

D mm d_{max} mm n_{max}	125 30 9000		140 40 6000		160 40 6000	
B mm	HSS	HM	HSS	HM	HSS	HM
15-27	+	+	+	+	+	+
28-50	+	+	+	+	+	+

Catalogue number	Type	Profile	D mm	b mm	d mm	z		n_{max}	
D1000S140A0002	6200	10	140	34	40	4	HSS	9000	•
D1000W140A0001	6200	10	140	34	40	4	HM	9000	+
D1100S140A0001	6200	11	140	34	40	4	HSS	9000	•
D1100W140A0001	6200	11	140	34	40	4	HM	9000	•
D1200S140A0001	6200	12	140	44	40	4	HSS	9000	•
D1200W140A0001	6200	12	140	44	40	4	HM	9000	+
D1300S140A0002	6200	13	140	44	40	4	HSS	9000	•
D1300W140A0001	6200	13	140	44	40	4	HM	9000	•
D1300S160A0001	6200	13	160	44	40	4	HSS	9000	•
D1300W160A0001	6200	13	160	44	40	4	HM	9000	+

6200 Side cutters

Brazed profile cutters type **6200** with four cutting teeth, designed for professional machining of solid wood. Side cutter is used for edge beveling of the machined elements. Special geometry allows for working together with sets for floor board.

Type of work: edge beveling of floor board.

Material:
- HSS solid softwood
- HM solid hardwood

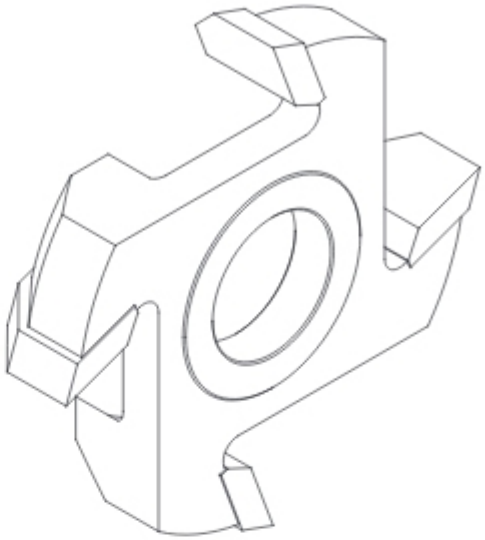

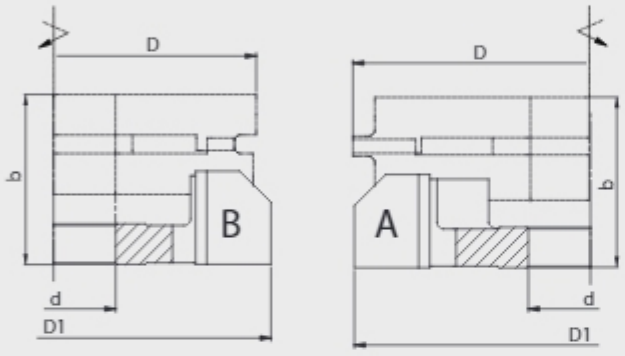

Profile 10

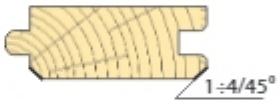

Profile 11

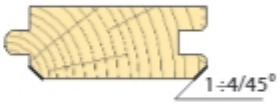

Profile 12

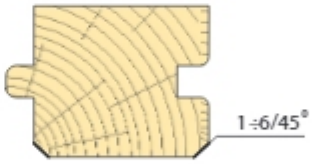

Profile 13

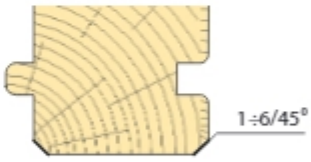

Catalogue number	Type	Profile	D1 mm	D mm	b mm Profile 10/11	b mm Profile 12/13	d mm	z		n_{max}		
F04-1787SL	6200A	10/11/12/13	140	140	53	68	40	4	HSS	9000	L	•
F04-1786SP	6200B	10/11/12/13	152	140	53	68	40	4	HSS	9000	R	•
F04-1787CWL	6200A	10/11/12/13	140	140	53	68	40	4	HM	9000	L	•
F04-1786CWP	6200B	10/11/12/13	152	140	53	68	40	4	HM	9000	R	•
F04-1787ASL	6200A	10/11/12/13	160	160	53	68	40	4	HSS	9000	L	+
F04-1786OSP	6200B	10/11/12/13	172	160	53	68	40	4	HSS	9000	R	+
F04-1787AWL	6200A	10/11/12/13	160	160	53	68	40	4	HM	9000	L	+
F04-1786AWP	6200B	10/11/12/13	172	160	53	68	40	4	HM	9000	R	+

7311

Set of brazed profile cutters type **7311** with four cutting teeth, designed for professional machining of solid wood. The set is used for making tongue and groove in parquet board production. Width is regulated with spacer rings included in the set. The set can work on 2-spindle machines.

Type of work: longitudinal profiling of tongue and groove.

Material:
- HSS solid softwood
- HM hardwood, glued wood, MDF

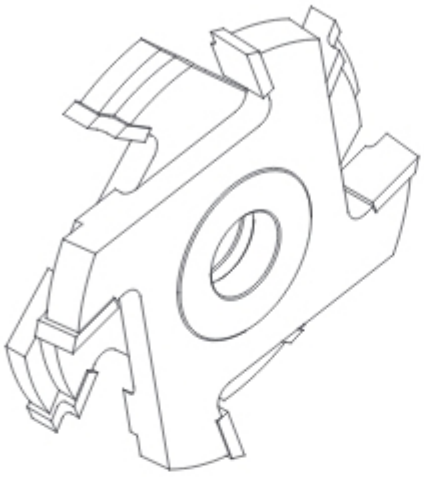

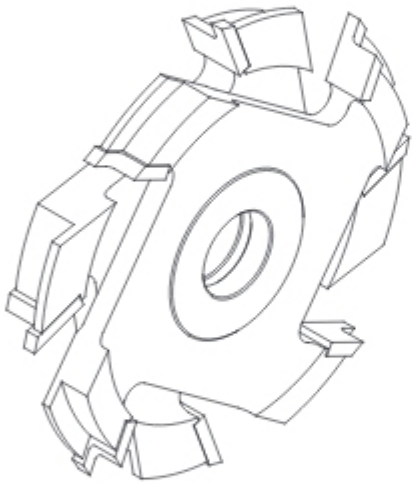

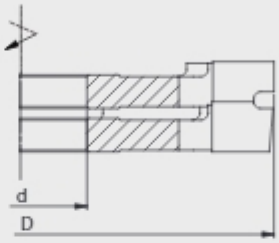

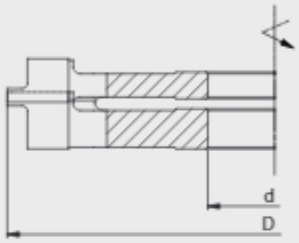

Profile P1

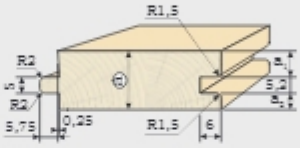

Profile P2

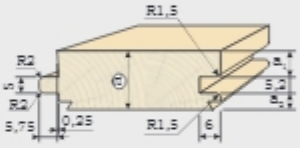

D mm d_{min} mm n_{max}	140 40 6000		160 50 6000	
	HSS	HM	HSS	HM
Profile P1	+	+	+	+
Profile P2	+	+	+	+

Profile	a	a1	a2
P1 i P2	16	7	3,9
P1 i P2	19	8,5	5,3
P1 i P2	22	10	6,8



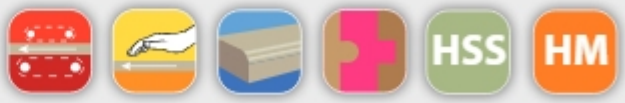

Catalogue number	Type	Profile	D mm	d mm	z		n_{max}	
P1-00S140A001	7311	P1	140	40	4	HSS	9000	+
P1-00W140A001	7311	P1	140	40	4	HM	9000	+
P1-00S160A001	7311	P1	160	50	4	HSS	9000	+
P1-00W160A001	7311	P1	160	30	4	HM	9000	+
P2-00S140A001	7311	P2	140	40	4	HSS	9000	+
P2-00W140A001	7311	P2	140	40	4	HM	9000	+
P2-00S160A001	7311	P2	160	50	4	HSS	9000	+
P2-00W160A001	7311	P2	160	30	4	HM	9000	+

FP-03

Set of brazed profile cutters type **FP-03** with four cutting teeth, designed for professional machining of wood and wood-based materials such as chipboard, MDF and others. The set is used for making longitudinal profiling and tenoning of furniture doors. Width is regulated with spacer rings included in the set. Regulation range 22-35 mm. One set can be used for several profiles.

Type of work: longitudinal profiling of furniture doors.

Material:

HSS solid softwood

HM glued wood, chipboard, MDF

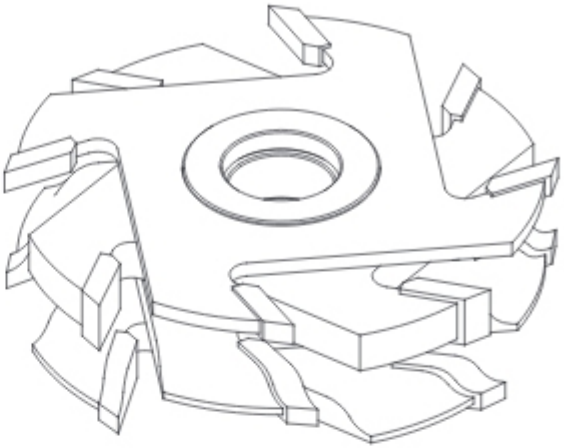

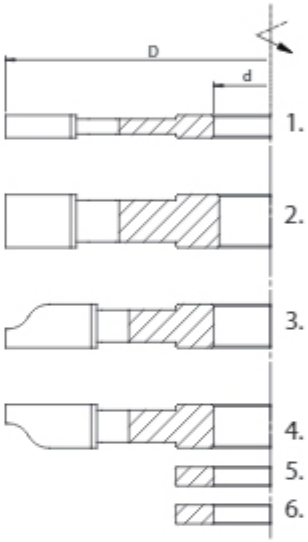

Nr	D mm	B mm	d_{H7} mm	R mm	n_{max}		
1.	140	6	40		9000		+
2.	140	14	40	6	9000		+
3.	140	11,5	40	6	9000	L	+
4.	140	11,5	40		9000	R	+
5.	63	6	40		Distance ring 1 pc.		+
6.	63	5	40		Distance ring 2 pcs.		+

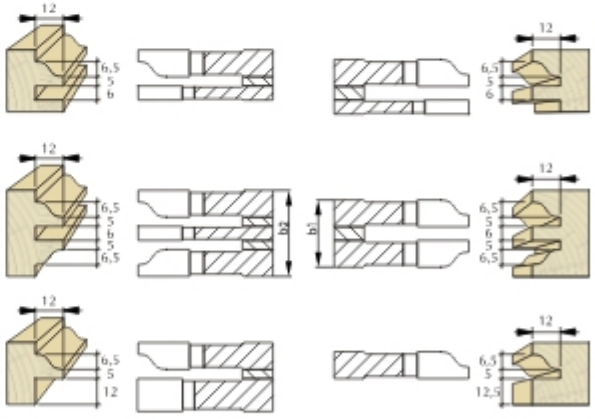

D mm d_{H7} mm n_{max}	140 40 6000		160 40 6000	
	HSS	HM	HSS	HM
	+	+	+	+





Catalogue number	Type	D mm	b1/b2 mm	d mm	z		n_{max}	
FP0300S140-0006	FP-03	140	29/39	40	4	HSS	9000	+
FP0300W140-0001	FP-03	140	29/39	40	4	HM	9000	+
FP0300W160-0001	FP-03	160	29/39	40	4	HM	9000	+

FP-05

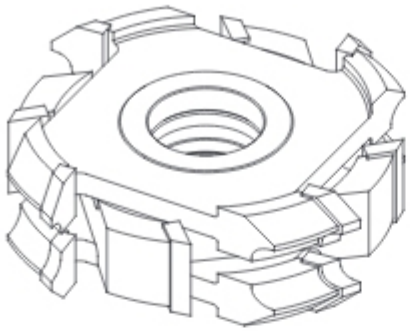

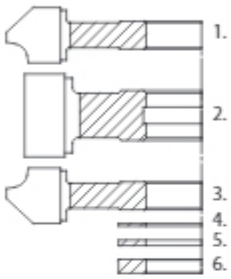

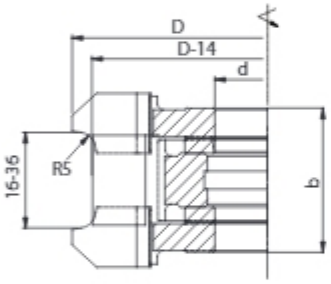

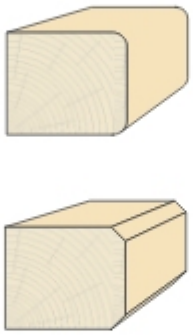

Set of brazed profile cutters type **FP-05** with four cutting teeth, designed for professional machining of wood and wood-based materials such as chipboard, MDF and others. The set is used for edge rounding and beveling of the machined elements. Width is regulated with spacer rings included in the set.

Type of work: edge profiling, rounding, beveling.

Material:
- HSS solid softwood
- HM glued wood, chipboard, MDF

Nr	D mm	B mm	d mm	R mm/∢	n_{max}		
1.	134	20	40	5/45°	9000	L	
2.	120	30	40		9000		
3.	134	20	40	5/45°	9000	R	
4.	60	1	40	Distancer 2 pc. WHAP00017			•
5.	60	2	40	Distancer 4 pcs. WHAP00018			•
6.	60	5	40	Distancer 2 pcs. WHAP00019			•

MDF HSS HM

D mm d_{max} mm n_{max}	100 30 9000		134 50 9000		144 50 9000		154 50 6000		164 50 6000		174 50 6000	
B mm	HSS	HM	HSS	HM	HSS	HM	HSS	HM	HSS	HM	HSS	HM
16-36	+	+	+	+	+	+	+	+	+	+	+	+

Catalogue number	Type		D mm	B mm	b mm	d mm	R mm/∢	z		n_{max}	
FP0500S134-0001	FP-05	Set	134	16-36	52	30	5/45°	4	HSS	9000	•
FP0500W134-0002	FP-05	Set	134	16-36	52	30	5/45°	4	HM	9000	•
FP0500S134-0002	FP-05	Set	134	16-36	52	40	5/45°	4	HSS	9000	•
FP0500W134-0001	FP-05	Set	134	16-36	52	40	5/45°	4	HM	9000	•
FP0500S164-0001	FP-05	Set	164	16-36	52	50	5/45°	4	HSS	9000	+
FP0500W164-0001	FP-05	Set	164	16-36	52	50	5/45°	4	HM	9000	+
FP0501S134P0002	FP-05.03	Cutter	134	20		40	5/45°	4	HSS	9000	•
FP0501S134L0002	FP-05.01	Cutter	134	20		40	5/45°	4	HSS	9000	•
FP0502S134-0002	FP-05.02	Cutter	120	30		40		4	HSS	9000	•
FP0501W134P0001	FP-05.03	Cutter	134	20		40	5/45°	4	HM	9000	•
FP0501W134L0001	FP-05.01	Cutter	134	20		40	5/45°	4	HM	9000	•
FP0502W134-0001	FP-05.02	Cutter	120	30		40		4	HM	9000	•

FP-06

Set of brazed profile cutters type **FP-06** with four cutting teeth, designed for professional machining of wood and wood-based materials such as chipboard, MDF and others. The set is used for edge rounding and beveling of the machined elements. Increased regulation range. Width is regulated with spacer rings included in the set.

Type of work: edge profiling, rounding, beveling.

Material:

HSS solid softwood

HM glued wood, chipboard, MDF

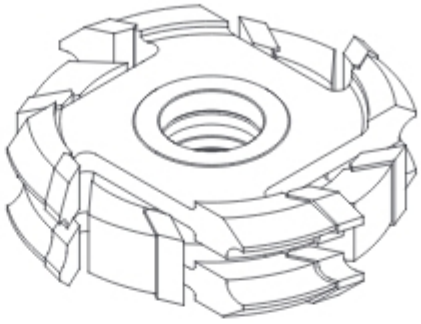

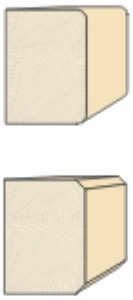

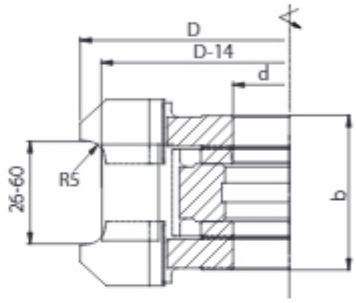

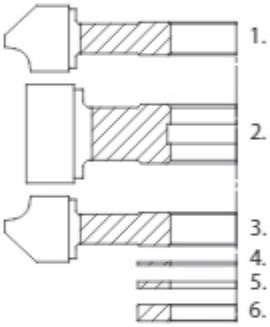

Nr	D mm	B mm	d mm	R mm/∢	n_{max}		
1.	134	20	40	5/45°	9000	L	
2.	120	55	40		9000		
3.	134	20	40	5/45°	9000	R	
4.	60	1	40	Distancer 2 pc. WHAP00017			•
5.	60	2	40	Distancer 4 pcs. WHAP00018			•
6.	60	5	40	Distancer 2 pcs. WHAP00019			•

D mm d_{max} mm n_{max}	100 30 9000		134 50 9000		144 50 9000		154 50 6000		164 50 6000		174 50 6000	
B mm	HSS	HM	HSS	HM	HSS	HM	HSS	HM	HSS	HM	HSS	HM
26-60	+	+	+	+	+	+	+	+	+	+	+	+

Catalogue number	Type		D mm	B mm	b mm	d mm	R mm/∢	z		n_{max}	
FP0600S134-0001	FP-06	Set	134	26-60	76	30	5/45°	4	HSS	9000	•
FP0600W134-0010	FP-06	Set	134	26-60	76	30	5/45°	4	HM	9000	•
FP0600S134-0002	FP-06	Set	134	26-60	76	40	5/45°	4	HSS	9000	•
FP0600W134-0001	FP-06	Set	134	26-60	76	40	5/45°	4	HM	9000	•
FP0501S134P0002	FP-06.03	Cutter	134	20		40	5/45°	4	HSS	9000	•
FP0501S134L0002	FP-06.01	Cutter	134	20		40	5/45°	4	HSS	9000	•
FP0602S134-0001	FP-06.02	Cutter	120	55		40		4	HSS	9000	•
FP0501W134P0001	FP-06.03	Cutter	134	20		40	5/45°	4	HM	9000	•
FP0501W134L0001	FP-06.01	Cutter	134	20		40	5/45°	4	HM	9000	•
FP0602W134-0001	FP-06.02	Cutter	120	55		40		4	HM	9000	•

FP-10

Set of brazed profile cutters type **FP-10** with four cutting teeth, designed for professional machining of wood and wood-based materials such as chipboard, MDF and others. The set is used for cutting longitudinal profiling and tenoning of one-sided furniture doors. Width is regulated with spacer rings included in the set. One set can be used for several profiles.

Type of work: Profiling furniture doors with one-sided profile.

Material:

HSS solid softwood

HM glued wood, chipboard, MDF

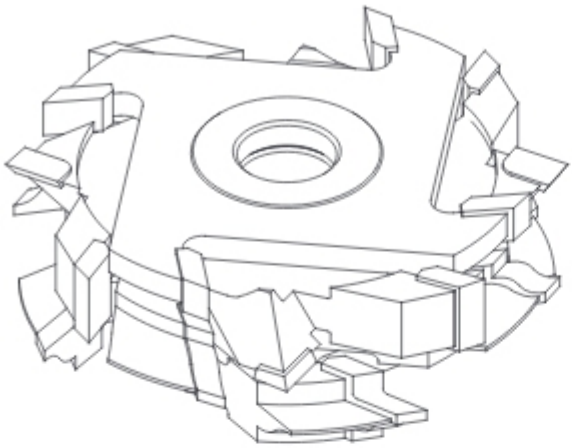

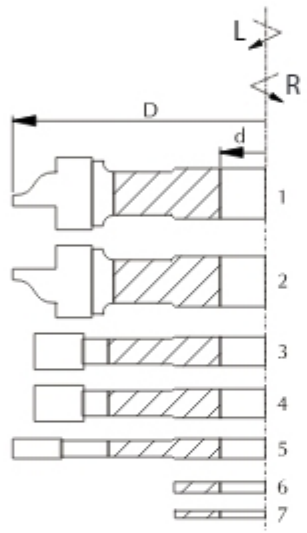

Nr	D mm	B mm	d_{max} mm	R mm	n_{max}		
1.	140	20	40	6	9000	R	+
2.	140	20	40	6	9000	L	+
3.	128	10	40		9000		+
4.	128	10	40		9000		+
5.	140	5,5	40		9000		+
6.	63	3	40	Distance ring 1 pc.			+
7.	63	2	40	Distance ring 1 pc.			+

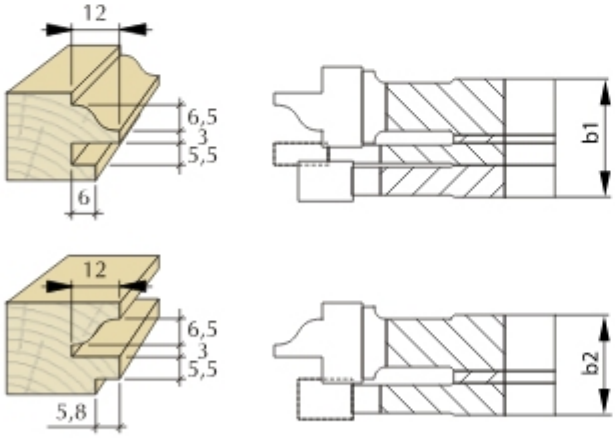

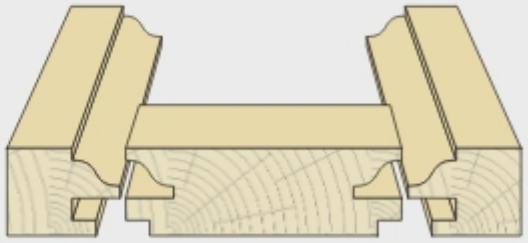





Catalogue number	Type	D mm	b1/b2 mm	d mm	z		n_{max}	
FP1000S140-0001	FP-10	140	29,5/25	30	4	HSS	9000	+
FP1000W140-001	FP-10	140	29,5/25	30	4	HM	9000	+

FP-12

Set of brazed profile cutters type **FP-12** with four cutting teeth, designed for professional machining of wood and wood-based materials such as chipboard, MDF and others. The set is used for longitudinal profiling and tenoning of one-sided furniture doors. Width is regulated with spacer rings included in the set. One set can be used for several profiles.

Type of work: Longitudinal profiling of furniture doors with one-sided profile.

Material:

HSS solid softwood

HM glued wood, chipboard, MDF

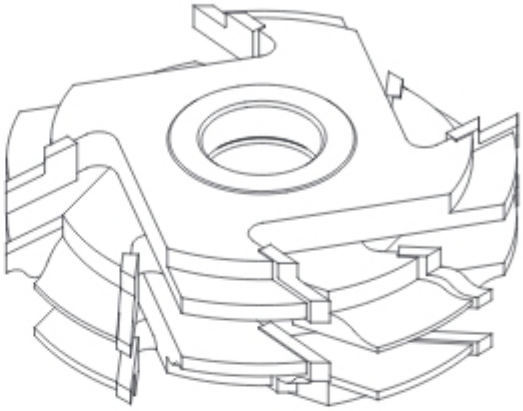

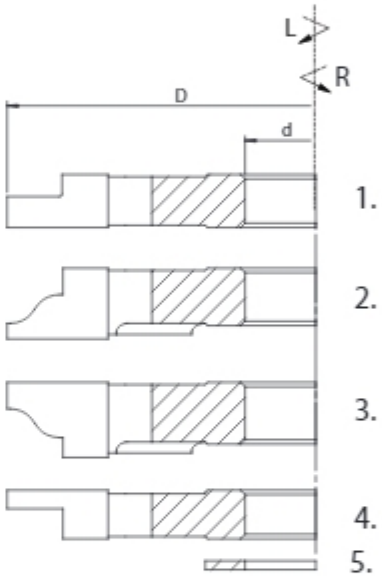

Nr	D mm	B mm	d_{max} mm	R mm	n_{max}		
1.	140	12	40		9000	L	+
2.	140	16	40	6	9000	L	+
3.	140	17	40	6	9000	R	+
4.	140	11	40		9000	R	+
5.	63	2	40	Distance ring 2 pcs.			+

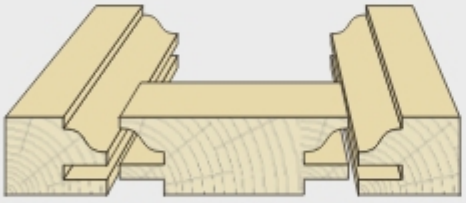

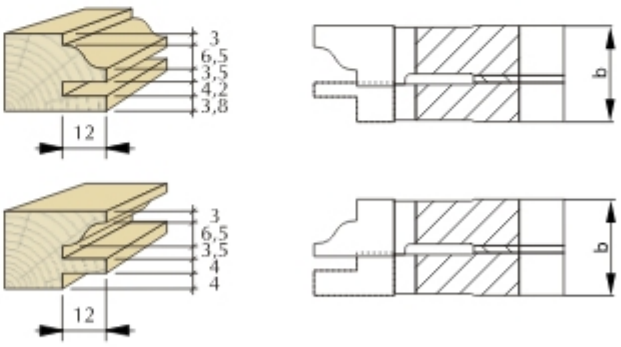

Catalogue number right		Catalogue number left		Type	D mm	b mm	d mm	z		n_{max}
FP1200S140P001	•	FP1200S140L001	+	FP-12	140	27/27	30	4	HSS	9000
FP1200W140P001	•	FP1200W140L001	+	FP-12	140	27/27	30	4	HM	9000
FP1200S160P001	+	FP1200S160L001	+	FP-12	160	27/27	40	4	HSS	9000

FP-14

Set of brazed profile cutters type **FP-14** with three cutting teeth, designed for professional machining of wood and wood-based materials such as chipboard, MDF and others. The set is used for cutting surface in railing production.

Type of work: railing edge profiling.

Material:
HSS solid softwood
HM solid hardwood

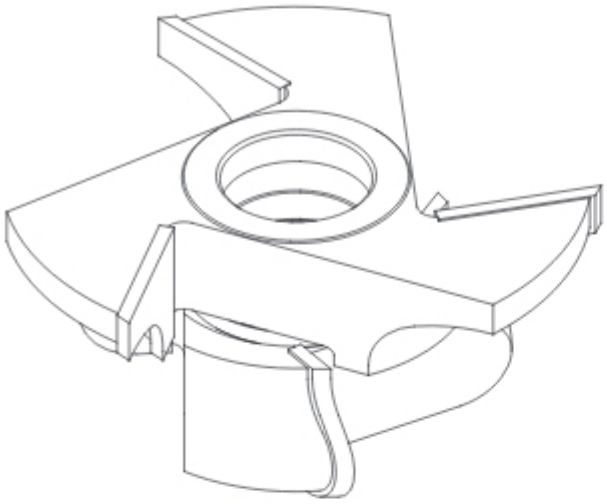

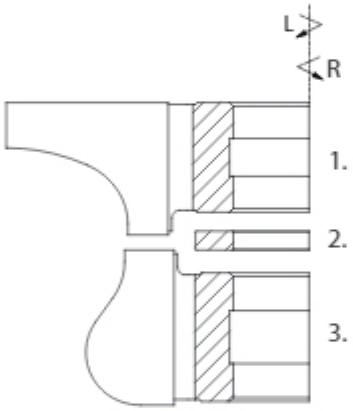

Nr	D mm	B mm	d_{max} mm	R mm	n_{max}		
1.	160	35	35	50/17	9000	R	+
3.	118	41	35	14/17	9000	L	+
2.	58	6	35	Distance ring 1 pc.			+

Nr	D mm	B mm	d_{max} mm	R mm	n_{max}		
1.	180	35	50	50/17	9000	R	+
3.	138	41	50	14/17	9000	L	+
2.	70	6	50	Distance ring 1 pc.			+

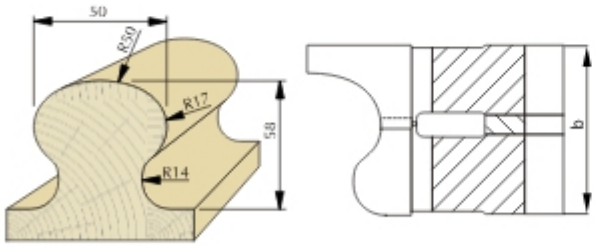

D mm d_{max} mm n_{max}	160 35 9000		180 50 9000	
	HSS	HM	HSS	HM
Profile 1	+	+	+	+

Catalogue number rigth		Catalogue number left		Type	D mm	b mm	d mm	z		n_{max}
FP1400S160P001	•	FP1400S160L001	+	FP-14	160	69	30	3	HSS	9000
FP1400W180P001	+	FP1400W180L001	+	FP-14	180	69	30	3	HM	6000
FP1400S180P001	+	FP1400S180L001	+	FP-14	180	69	50	3	HSS	6000

FP-15

Set of brazed profile cutters type **FP-15** with four cutting teeth, designed for professional machining of wood and wood-based materials such as chipboard, MDF and others. The set is used for edge rounding of the machined elements. Width is regulated with spacer rings included in the set.

Type of work: edge profiling, corner rounding.

Material:

HSS solid softwood

HM glued wood, chipboard, MDF

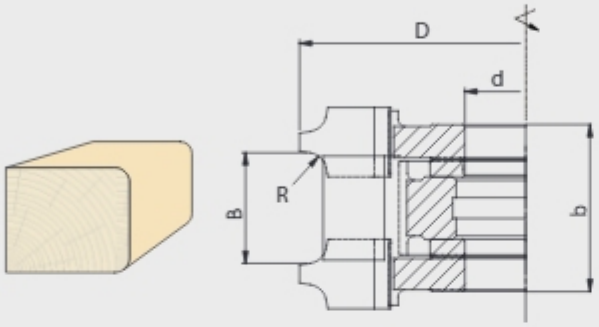

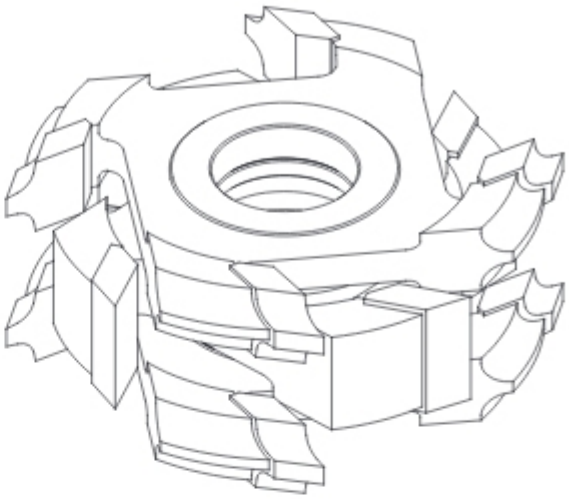

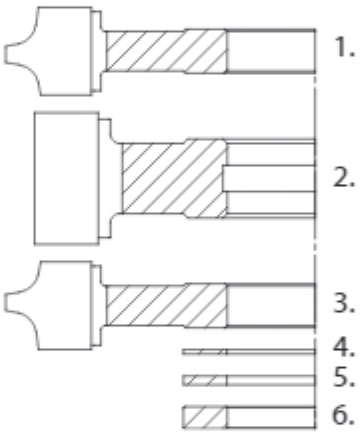

Nr	D mm	B mm	d mm	R/R mm	n_{max}	
1,3	134	20	40	5/5	9000	
2.	120	30	40		9000	
4.	63	1	40	Distancer 2 pc. WHAP00017		•
5.	63	2	40	Distancer 4 pcs. WHAP00018		•
6.	63	5	40	Distancer 2 pcs. WHAP00019		•

D mm d_{max} mm n_{max} B mm R/R mm	130 40 9000 16-34 3/3		132 40 9000 16-36 4/4		134 50 9000 16-36 5/5		136 50 9000 16-38 6/6		138 50 9000 20-40 7/7		140 50 9000 20-42 8/8	
	HSS	HM	HSS	HM	HSS	HM	HSS	HM	HSS	HM	HSS	HM
	+	+	+	+	+	+	+	+	+	+	+	+

Catalogue number	Type		D mm	B mm	b mm	d mm	R/R mm	z		n_{max}	
FP1500S134-0002	FP-15	Set	134	16-36	52	40	5/5	4	HSS	9000	•
FP1500W134-0001	FP-15	Set	134	16-36	52	40	5/5	4	HM	9000	•
FP0502S134-0002	FP-15.02	Cutter	120	30		40		4	HSS	9000	•
FP0502W134-0001	FP-15.02	Cutter	120	30		40		4	HM	9000	•
FP0602S134-0001	FP-15.02	Cutter	120	55		40		4	HSS	9000	•
FP0602W134-0001	FP-15.02	Cutter	120	55		40		4	HM	9000	•

FP-16

Set of brazed profile cutters type **FP-16** with four or six cutting teeth, designed for professional machining of wood and wood-based materials such as chipboard, MDF and others. The set is used for edge beveling of the machined elements. Width is regulated with spacer rings included in the set.

Type of work: edge profiling, corner beveling.

Material:
- HSS solid softwood
- HM glued wood, chipboard, MDF

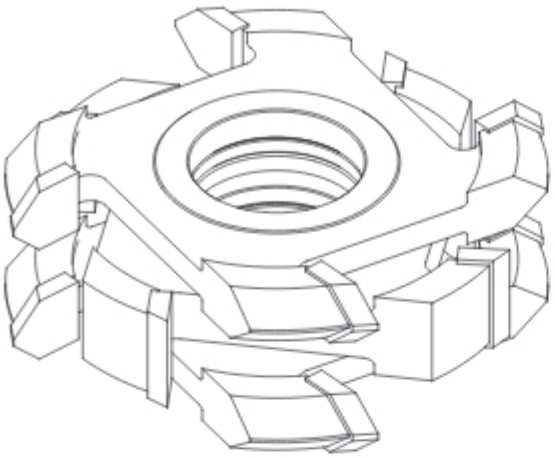

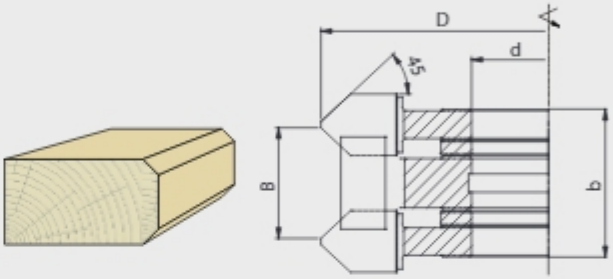

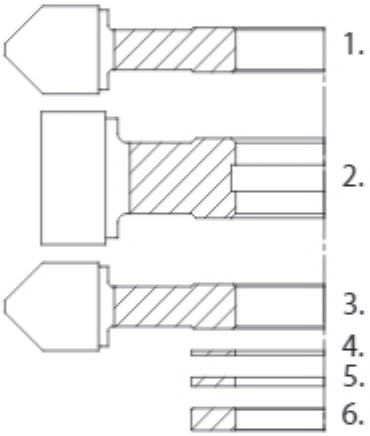

Nr	D mm	d_{max} mm	∢/∢	n_{max}	
1,3	134	40	45°/45°	9000	
2.	120	40		9000	
4.	63	40	Distancer 2 pcs. WHAP00017		•
5.	63	40	Distancer 4 pcs. WHAP00018		•
6.	63	40	Distancer 2 pcs. WHAP00019		•

MDF HSS HM

D mm d_{max} mm n_{max} B mm ∢/∢	134 50 9000 16-36 45°/45°		134 50 9000 26-60 45°/45°		134 50 9000 30-70 45°/45°		154 60 9000 16-36 45°/45°		154 60 9000 26-60 45°/45°		174 70 6000 16-36 45°/45°		174 70 6000 26-60 45°/45°		194 80 6000 26-60 45°/45°	
	HSS	HM	HSS	HM	HSS	HM	HSS	HM	HSS	HM	HSS	HM	HSS	HM	HSS	HM
	+	+	+	+	+	+	+	+	+	+	+	+	+	+	+	+

Catalogue number	Type		D mm	B mm	b mm	d mm	∢/∢	z		n_{max}	
FP1600S134-0001	FP-16	Set	134	16-36	52	40	45°/45°	4	HSS	9000	•
FP1600W134-0002	FP-16	Set	134	16-36	52	40	45°/45°	4	HM	9000	•
FP0502S134-0002	FP-16.02	Cutter	120	30		40		4	HSS	9000	•
FP0502W134-0001	FP-16.02	Cutter	120	30		40		4	HM	9000	•
FP0602S134-0001	FP-16.02	Cutter	120	55		40		4	HSS	9000	•
FP0602W134-0001	FP-16.02	Cutter	120	55		40		4	HM	9000	•

FPO-01

Brazed profile cutters type **FPO-01** with four cutting teeth, designed for professional machining of solid wood. The cutter is used for cutting surface in production of garden programme elements. Special geometry allows for making profiles with a single cutter.

Type of work: surface profiling.

Material:
- solid softwood
- solid hardwood

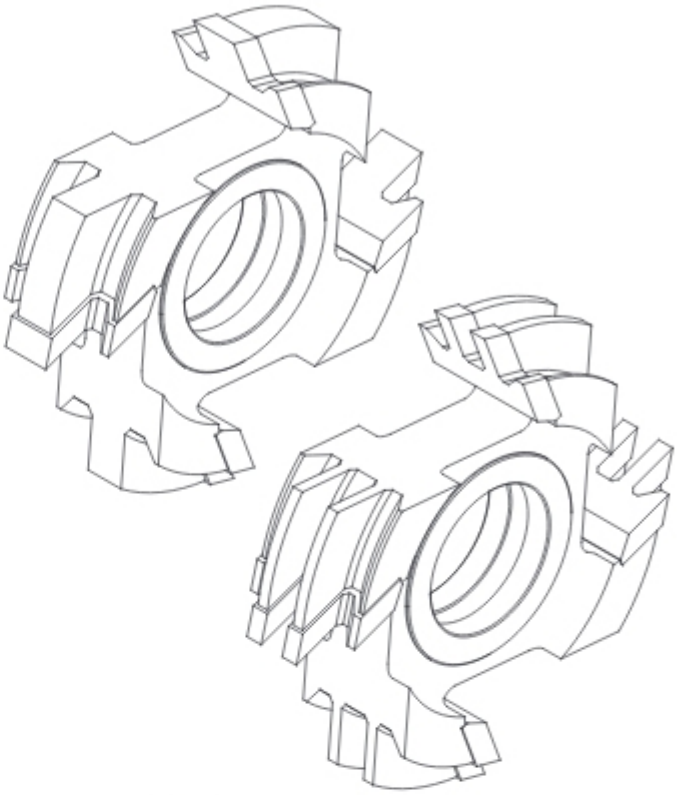

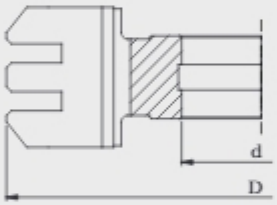

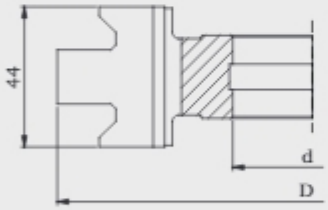

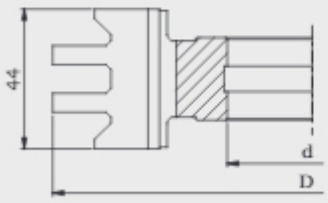

Profile P1

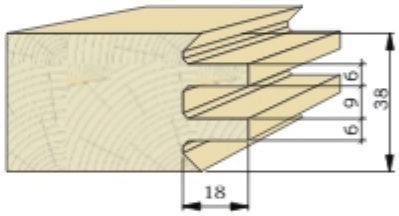

Profile P2

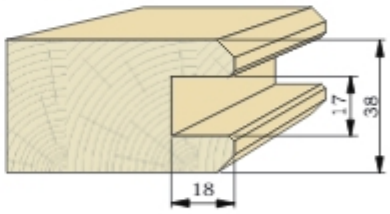

Profile P3

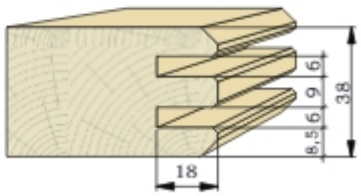

Catalogue number	Type	Profile	D mm	d mm	z		n_{max}	
F02-2234S	FPO-01	P1	160	50	4	HSS	9000	+
F02-2236S	FPO-01	P2	160	50	4	HSS	9000	+
F02-2237S	FPO-01	P3	160	50	4	HSS	9000	+

FPO-02

Set of brazed profile cutters type **FPO-02** with four cutting teeth, designed for professional machining of solid wood. The set is used for cutting surface in production of wooden walls. Width is regulated with spacer rings included in the set. Special geometry allows for making profiles with a single cutter.

Type of work: surface profiling.

Material: solid wood

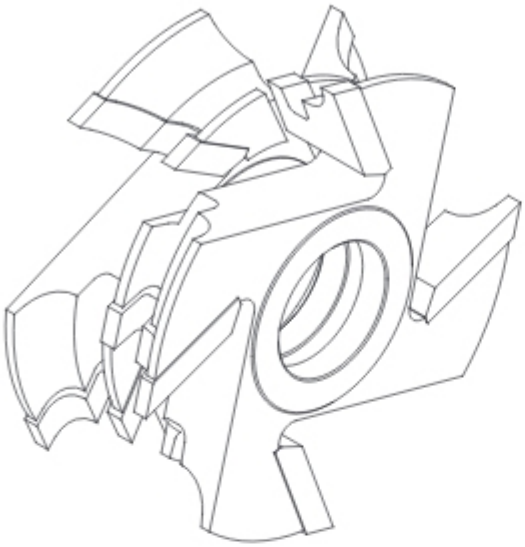

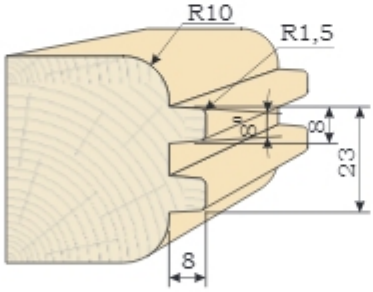

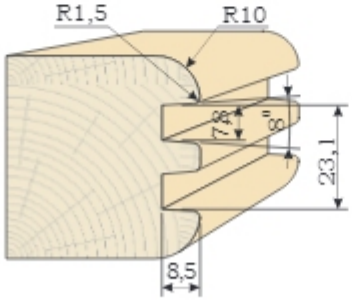

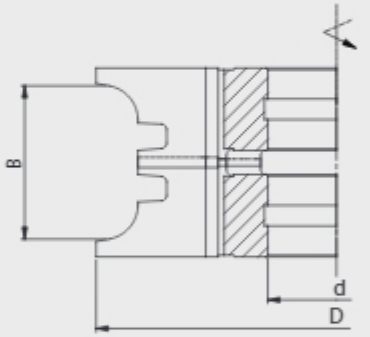

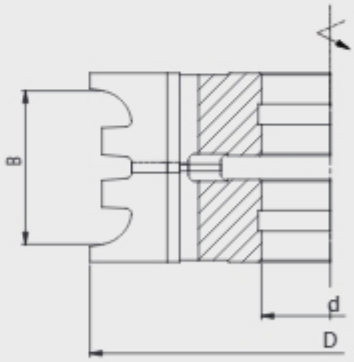

Catalogue number	Type	D mm	B mm	d mm	R	z		n_{max}	
F04-0814-00S	FPO-02	140	45	40	10	4	HSS	9000	+

FPO-03

Set of brazed profile cutters type **FPO-03** with four cutting teeth, designed for professional machining of solid wood. The set is used for cutting terrace floor surface. Width is regulated with spacer rings included in the set.

Type of work: terrace floor surface profiling.

Material: solid wood

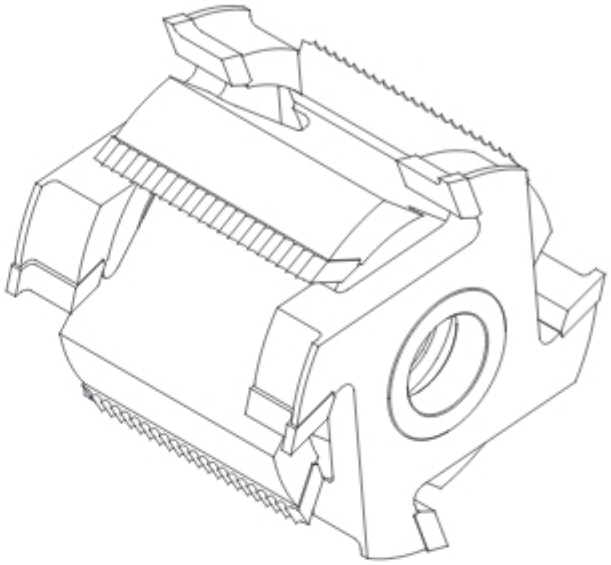

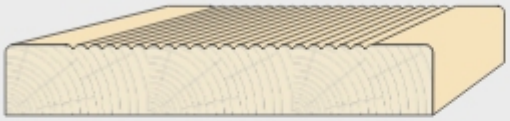

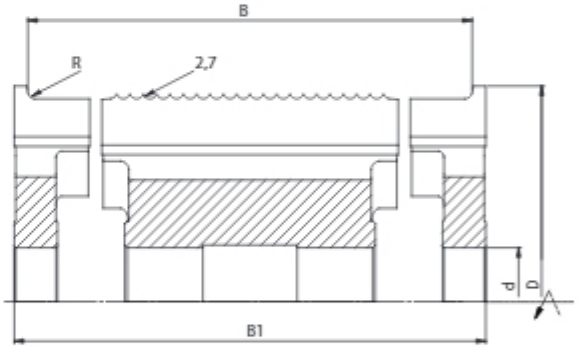

D mm d_{max} mm n_{max}	160 40 6000	180 50 6000
B		
120-135	+	+
120-145	+	+

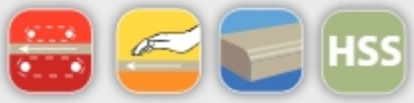



Catalogue number	Type	D mm	B mm	B1 mm	d	R mm	z		n_{max}	
F04-0653-00AS	FPO-03	160	120-135	145	40	2,7	4	HSS	9000	+
F04-0653-00S	FPO-03	160	120-145	155	40	2,7	4	HSS	9000	+

Cutters with hydro clamping

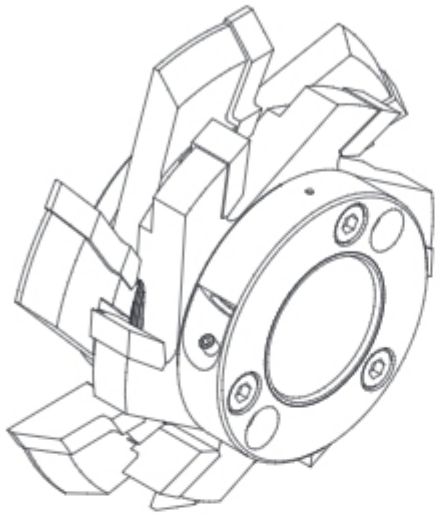

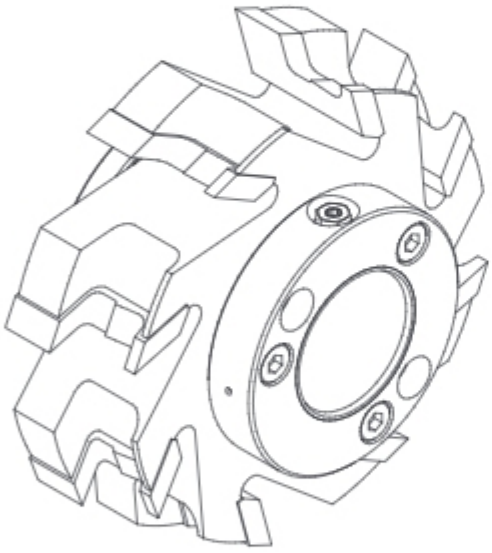

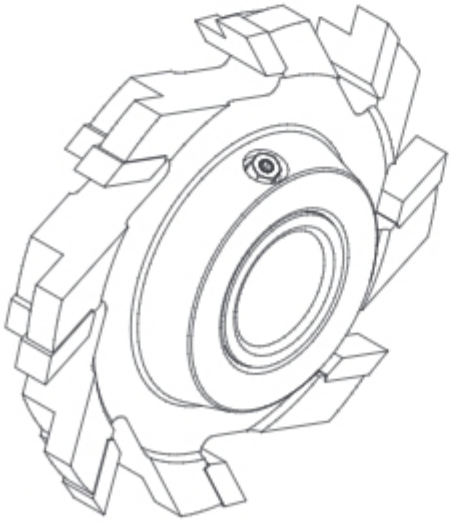

Cutter or **set of cutters with hydraulic clamping system** is designed for professional, very precise machining of solid wood. The tools mounted on hydro sleeve are designed for very precise profiling as well as pre-planing and finishing flat surfaces.

The construction of tools with hydro clamping or hydro sleeve guarantees narrowed tolerance of radial run-out reduced to minimum as fitting tolerance after installing the system on the machine spindle (developing pressure 300 bar) equals to zero, which automatically results in very precise positioning of the tool on the machine spindle. The hydro system which also allows for perfect balancing of the tools, apart from very high machined surface quality, enables working with high cutting and feed speed as well as guarantees significantly increased life of the tool due to even wear of all the blades.

On request, we can suggest and manufacture a proper tool (cutter or set of cutters on a hydro sleeve) for the required type of work, material, parameters and conditions during machining. The set includes set of cutting tools, spacer rings and precise hydro sleeve in a version with a key (available only for L≤110 mm) or with a pump (for L≤250).

Advantages:

- precise mounting of the tool on the machine spindle,
- narrowed radial run-out tolerance,
- very high quality of machined material surface,
- increased life of the tool,
- perfect balancing of the tool,
- low vibration level,
- quiet and steady running of the tool,
- ability to work with high speed cutting and feed speed up to 200 m/min.

Hydro cutters (hydro monolith)

We also offer a solution of monolith cutter where the hydro system is an integral part of the cutter's hub. The whole system can't be dismantled which allows for more precise sharpening and balancing of the tool. The sleeve is clamped tight with a pump and loosened with a discharge valve. The valve system is placed on the cutter's hub to enable the operator easy and fast access.

Hydro sleeves are shown on pages 9.13-9.22.

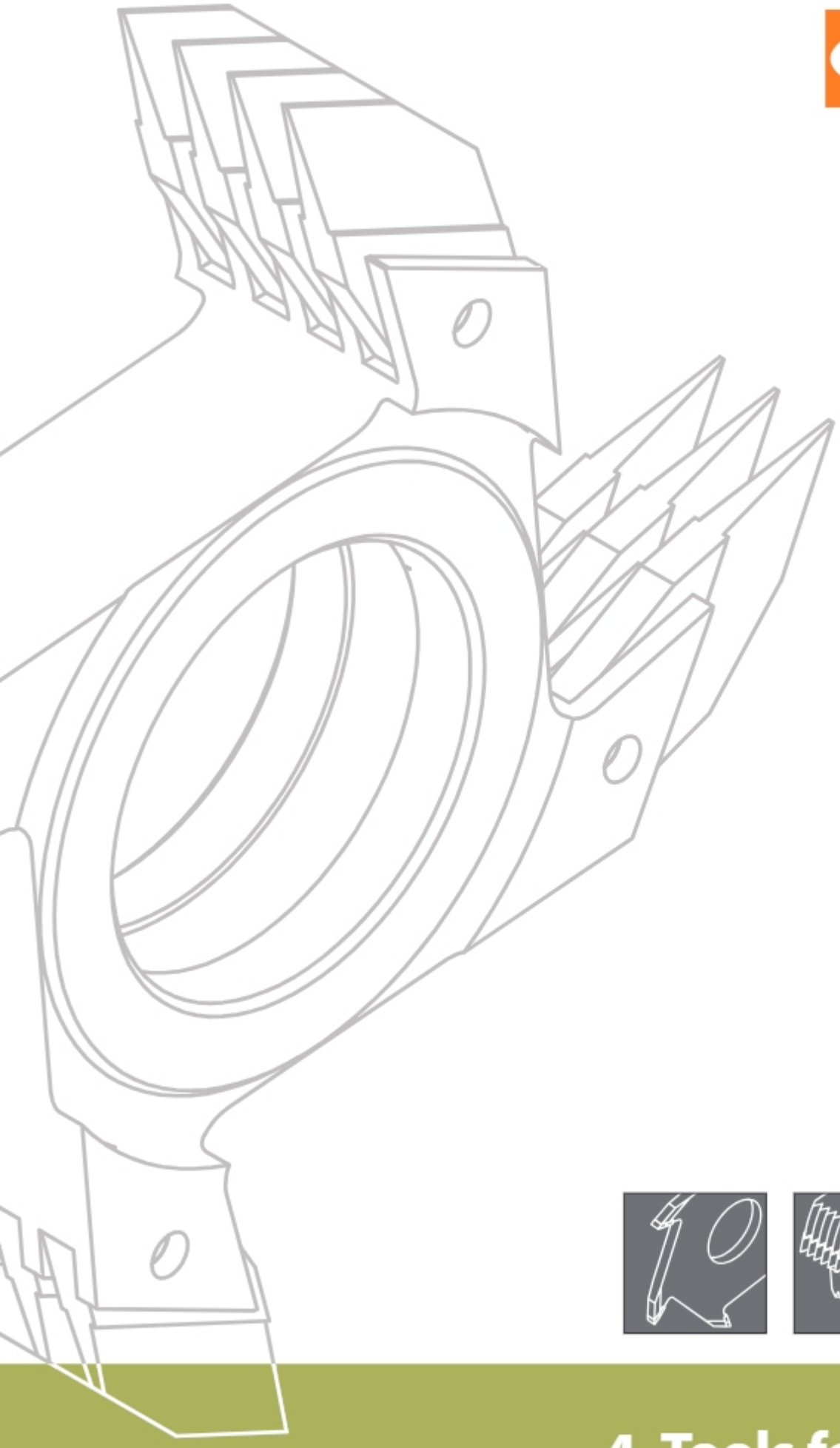





4. Tools for jointing

Tools for joints

Tools for joints are used for permanent jointing of wooden elements. In window and construction woodworking this solution is used to obtain long elements from shorter ones. After removing all material flaws (knags, ripped parts, cracks, resin contamination), short elements are jointed together to obtain material which is stronger and mechanically more resistant compared to a single, solid (not glued) element. It can be especially important when long wooden elements are subject to deformation caused by weather conditions (window profiles, doors, building constructions etc.). Additional advantage of the jointing process is reduction of production waste.

Joint sizes are standardized and we keep these measures when designing our products. The overall width of the jointed element is given by the client and FABA is responsible for choosing the proper number of cutters. For pitch size (distance between neighbouring joint fingers) we use one of the standard values: 3,8; 4,0 or 6,2. Standard heights include joints of 10 mm, 15 mm and 20 mm with the following division:

- 10/10, 15/15, 20/20 – for machines without formatting /cutting unit,
- 10/11, 15/16,5, 20/22 – for machines with formatting /cutting unit.

Therefore, we divide the tools in the following categories:

- Tools for machines with formatting (cutting). Enable continuous quality control and regulation of joint clamping force which is important because of wear of tools during work and inaccuracies resulting from regrinding,
- Tools for machines without formatting (cutting) – allowing for saving on costs of this operation (cost of tool + time) but needing very precise regrinding in order to maintain the required depth of joints made on the machine.

The following types of jointing are used:

- continuous joint (fingers along the whole joint width), which may give irregular jointing line, visible on the edge,
- joint with shoulder, where fingers are "hidden" below the cross cut of the element. There are many types of such joints as shoulder can be placed symmetrically in the middle of finger height, at the top or at the bottom. Also non-symmetrical version are possible, where one side is at the top and the other one at the bottom etc.

We present a range of tools for various joint depth, divided into brazed cutters and cutter heads with exchangeable knives.

With the order the following information must be given:

- species and type of the machined wood,
- approximate dimensions of the requested joint,
- machine type,
- kind of glue which is used for the joint,
- feed type (manual, mechanical),
- clamp type.



Contents

4. TOOLS FOR JOINTING

Pictograms 4.3

Joint fitting 4.4

Basic work parameters 4.4

4.1 Cutters for joints 4/10/15/20 ..... 4.5

4.2 Cutter heads for joints 10/15/20 ..... 4.13

4.3 Cutters with HM tips – disc cutters 4.18

4.4 Cutters for longitudinal and cross jointing 4.20

4.5 Cutters with regulated width 4.24

4.6 Cutter heads with exchangeable knives 4.25

Pictograms


solid dry softwood


solid dry hardwood


glued wood


mechanical feed


manual feed


longitudinal jointing


cross-jointing

HM carbide

HP high performance coating

HSS high-speed cutting steel

- available/stock product
+ possible production time 9-15 working days.

Joint fitting

Proper fitting of two elements connected with micro joints made with tool FZK 11/17/20

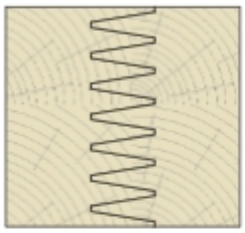

Correct joint

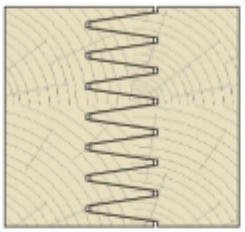

Incorrect joint
(tight)

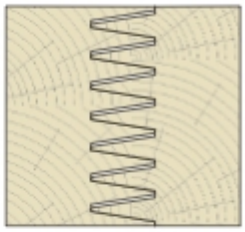

Incorrect joint
(loose)

Cutting joint endings in order to obtain properly fitted joint is necessary because of various hardness and dampness of the material and used clamping.

With loose joint the saw blade (cutting) should be moved right (towards the material)

With tight joint the saw blade (cutting) should be moved left (away from the material)

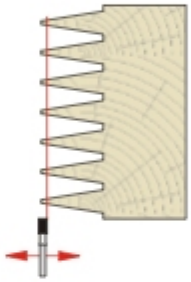

Basic cutting parameters

Cutting speed Vc

$$Vc = \frac{D \times n \times \pi}{60\,000} \text{ [m/s]}$$

D - tool diameter [mm]
n - rotation speed [1/min]
p_z - feed per tooth [mm]
p_{min} - feed per minute [m/min]
z - number of teeth
π = 3,14

Feed p_{min} / p_z

p_{min} [m/min] ⟷ p_z [mm/tooth]

$$p_{min} = \frac{p_z \times n \times z}{1\,000}$$

$$p_z = \frac{p_{min} \times 1\,000}{n \times z}$$

FZK-14N/15N

Finger joint brazed cutters for jointing solid wood. Exceptional precision of the tool for micro-joint allows for making perfectly fitted elements and 4 mm pitch guarantees economical use of material. The tools are designed for jointing light elements, producing picture frames, mirror frames and light furniture elements. Combining more that one tool allows for obtaining the requested joint width. The cutter can be produced with face cutting (formatting) (FZK-14N, joint 4/4,5) or without face cutting (FZK-15N, joint 4/4).

Type of jointing: cross-joint.

Material: solid dry softwood.



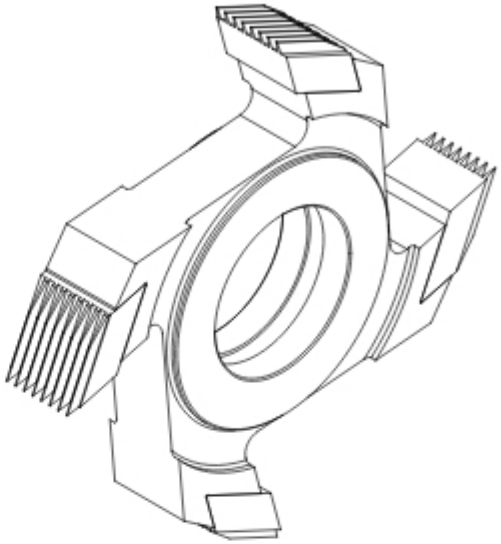

B_R mm	Maximum wood width for pitch 1,6	Number of cutters
25,9	24	1
51,5	50	2
77,1	75	3
102,7	101	4
128,3	126	5
153,9	152	6
179,5	177	7
205,1	203	8

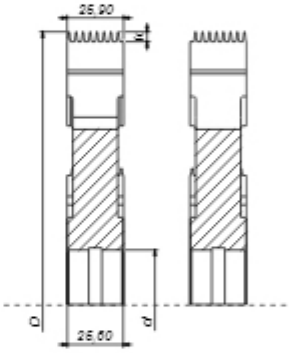

HSS HP

D n max d z B_R	140 9000 40 2+2 25,9	160 9000 60 2+2 25,9	180 8000 60 3+3 25,9	200 7000 60 3+3 25,9	250 6000 70 4+4 25,9
FZK-14N k=4/4,5x1,6	+	+	+	+	+
FZK-15N k=4/4x1,6	+	+	+	+	+

Catalogue number		Type	D mm	B mm	d mm	k mm	z	n_{max}	
FZK14NS160-001	HSS	FZK-14N	160	25,9	50	4/4,5x1,6	2+2	9000	+
FZK14NS250-001	HSS	FZK-14N	250	25,9	50	4/4,5x1,6	3+3	6000	+
FZK15NS160-002	HSS	FZK-15N	160	25,9	50	4/4x1,6	2+2	9000	+
FZK15NS250-001	HSS	FZK-15N	250	25,9	50	4/4x1,6	3+3	6000	+

With orders for FZK type cutters, please give type of machined material.

Optionally, the tools can be offered with HP coating.

More information on page 4.17.

FZK-23N

FZK-23N - finger joint brazed cutter for jointing soft solid wood. Exceptional precision of the tool for micro-joint allows for making perfectly fitted elements. Small joint depth 6/7 guarantees economical use of material. The tools are designed for jointing light elements, production of picture frames, mirror frames and other light furniture elements. Combining more than one tool allows for obtaining the requested joint width.

Type of jointing: cross-joint.

Material: solid softwood.

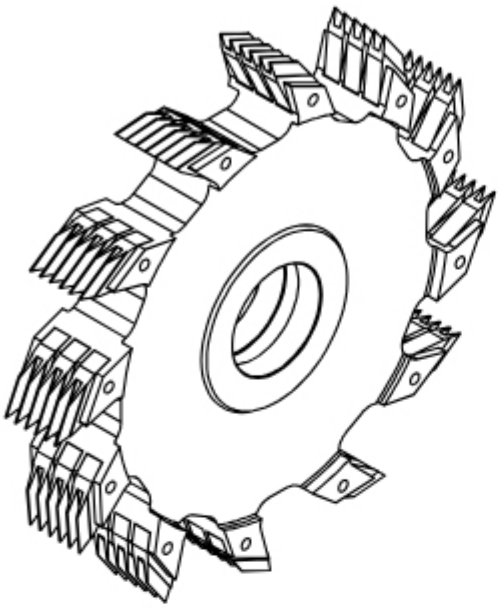



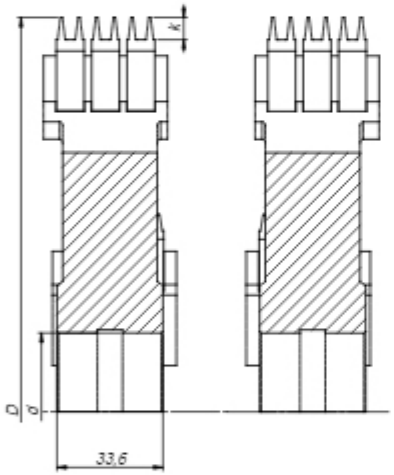

B_n mm	Maximum wood width for pitch 2.8	Number of cutters
34	31	1
67,6	65	2
101,2	98	3
134,8	132	4
168,4	165	5
202	199	6
235,6	233	7
269,2	266	8

D n d z B	160 9000 60 2+2 34	160 9000 60 3+3 34	250 6000 70 3+3 34	250 6000 70 4+4 34	250 6000 70 6+6 34
FZK-23N k=6/7x2,8	+	+	+	+	+

Catalogue number		Type	D mm	B mm	d mm	k mm	z	n_{max}	
FZK23NS160-002	HSS	FZK-23N	160	34	50	6/7x2,8	2+2	9000	+
FZK23NS160-003	HSS	FZK-23N	160	34	50	6/7x2,8	3+3	9000	+
FZK23NS250-001	HSS	FZK-23N	250	34	50	6/7x2,8	6+6	6000	+

With orders for FZK type cutters, please give type of machined material.

Optionally, the tools can be offered with HP coating.

More information on page 4.17.

FZK-11N/12N

Finger joint brazed cutters for jointing solid wood. Exceptional precision of the tool guarantees perfectly fitted joint. The cutter can be produced in two versions: with face cutting (formatting) (FZK-11N, joint 10/11) or without cutting (FZK-12N, joint 10/10).

Type of jointing: cross-joint.

Material: solid wood.





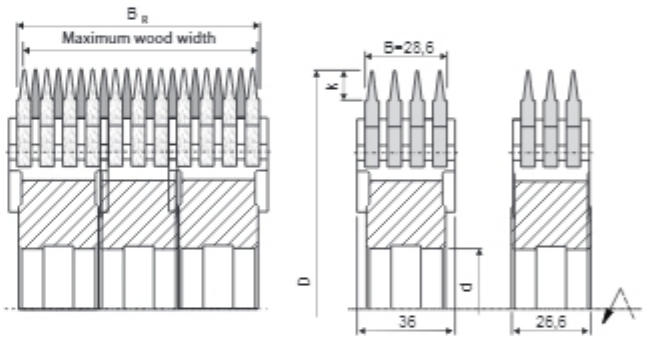

B_R mm	Maximum wood width for pitch 3,8	Number of cutters
28,6	24	1
55,2	51	2
81,8	77	3
108,4	104	4
135,0	131	5
161,6	157	6
188,2	184	7
214,8	210	8

HSS HP

D n max z B	140 9000 40 2+2 28,6	160 9000 60 3+3 28,6	180 8000 60 3+3 28,6	200 7000 60 3+3 28,6	250 6000 70 4+4 28,6
FZK-11N k=10/11x3,8	+	+	+	+	+
FZK-12N k=10/10x3,8	+	+	+	+	+

Catalogue number		Type	D mm	B mm	d mm	k mm	z	n_{max}	
FZK11NS160-001	HSS	FZK-11N	160	28,6	50	10/11x3,8	2+2	9000	•
FZK11NS250-001	HSS	FZK-11N	250	28,6	50	10/11x3,8	3+3	6000	•
FZK12NS140-002	HSS	FZK-12N	140	28,6	30	10/10x3,8	2+2	9000	•
FZK12NS140-001	HSS	FZK-12N	140	28,6	40	10/10x3,8	2+2	9000	•
FZK12NS160-001	HSS	FZK-12N	160	28,6	40	10/10x3,8	2+2	9000	•
FZK12NS160-002	HSS	FZK-12N	160	28,6	50	10/10x3,8	2+2	9000	•
FZK12NS250-001	HSS	FZK-12N	250	28,6	50	10/10x3,8	3+3	6000	•

With orders for FZK type cutters, please give type of machined material.

Optionally, the tools can be offered with HP coating.

More information on page 4.17.

FZK-17N/18N

Finger joint brazed cutters for jointing solid wood. Exceptional precision of the tool guarantees perfectly fitted joint. The cutter can be produced in two versions: with face cutting (formatting) (FZK-17N, joint 15/16,5) or without cutting (FZK-18N, joint 15/15).

Type of jointing: cross-joint.

Material: solid wood.

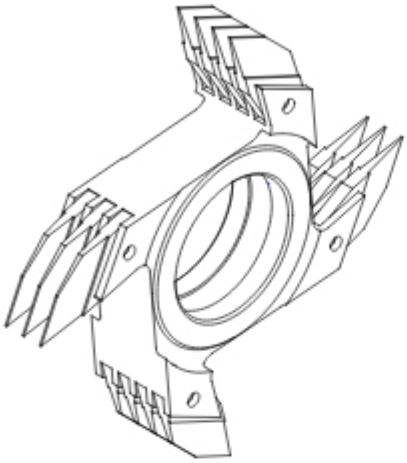



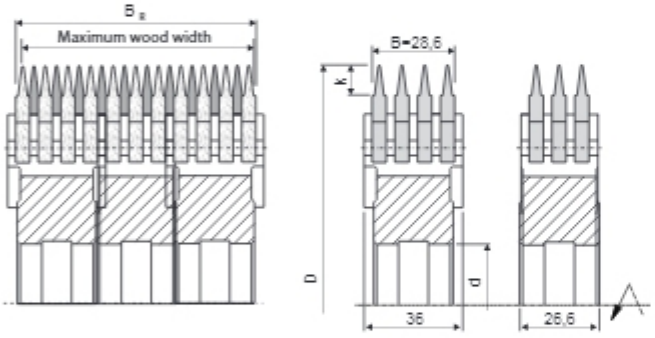

B_g mm	Maximum wood width for pitch 3,8	Number of cutters
28,6	24	1
55,2	51	2
81,8	77	3
108,4	104	4
135,0	131	5
161,6	157	6
188,2	184	7
214,8	210	8

D z B	140 9000 35 2+2 28,6	160 9000 50 2+2 28,6	170 8000 60 2+2 28,6	170 8000 60 3+3 28,6	180 7000 60 3+3 28,6	200 6000 70 3+3 28,6	250 6000 70 3+3 28,6	260 6000 70 3+3 28,6
FZK-17N k=15/16,5x3,8	+	+	+	+	+	+	+	+
FZK-18N k=15/15x3,8	+	+	+	+	+	+	+	+

Catalogue number		Type	D mm	B mm	d mm	k mm	z	n_{max}	
FZK17NS170-002	HSS	FZK-17N	170	28,6	50	15/16,5x3,8	2+2	8000	+
FZK17NS260-001	HSS	FZK-17N	260	28,6	50	15/16,5x3,8	3+3	6000	+
FZK18NS170-001	HSS	FZK-18N	170	28,6	50	15/15x3,8	2+2	8000	+
FZK18NS260-001	HSS	FZK-18N	260	28,6	50	15/15x3,8	3+3	6000	+

With orders for FZK type cutters, please give type of machined material.

Optionally, the tools can be offered with HP coating.

More information on page 4.17.

FZK-19N/20N

Finger joint brazed cutters for jointing solid wood. Exceptional precision of the tool guarantees perfectly fitted joint. The cutter can be produced in two versions: with face cutting (formatting) (FZK-20N, joint 20/22) or without cutting (FZK-19N, joint 20/20).

Type of jointing: cross-joint.

Material: solid wood.

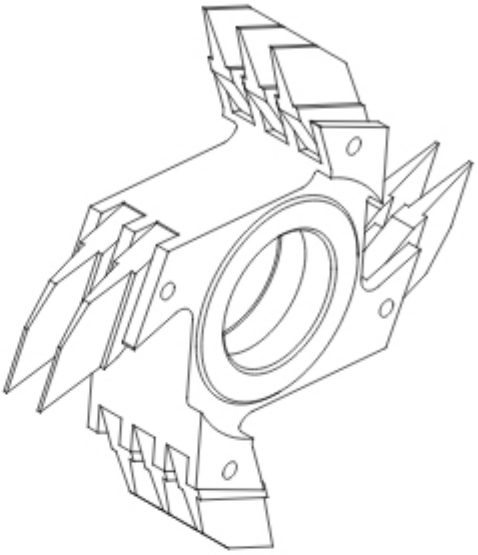

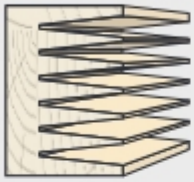

B_g mm	Maximum wood width for pitch 6.2	Number of cutters
33,0	28	1
66,0	59	2
99,0	90	3
132,0	121	4
165,0	152	5
198,0	183	6
231,0	214	7
264,0	245	8

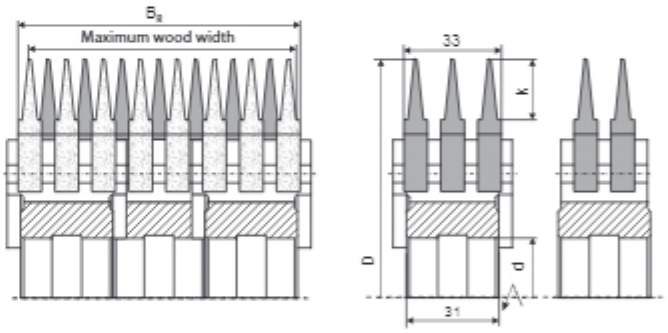

HSS HP

D B d z B_g	160 9000 40 2+2 33	170 8000 50 3+3 33	180 7000 60 2+2 33	180 7000 60 3+3 33	200 6000 60 3+3 33	250 6000 70 3+3 33	260 6000 80 3+3 33
FZK-19N k=20/20x6,2	+	+	+	+	+	+	+
FZK-20N k=20/22x6,2	+	+	+	+	+	+	+

Catalogue number		Type	D mm	B mm	d mm	k mm	z	n_{max}	
FZK19NS180-002	HSS	FZK-19N	180	33	50	20/20x6,2	2+2	6000	+
FZK20NS180-001	HSS	FZK-20N	180	33	50	20/22x6,2	2+2	6000	+
FZK20NS260-001	HSS	FZK-20N	260	33	50	20/22x6,2	3+3	6000	+

With orders for FZK type cutters, please give type of machined material.

Optionally, the tools can be offered with HP coating.

More information on page 4.17.

FZK-14A/14B

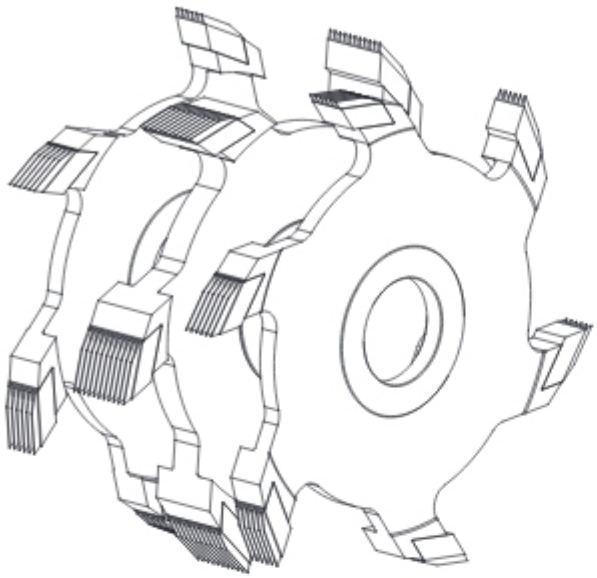

Finger joint brazed cutters for jointing solid wood. Exceptional precision of the tool for micro-joint allows for making perfectly fitted elements and 4 mm pitch guarantees economical use of material. The tools are designed for jointing light elements, producing picture frames, mirror frames and light furniture elements. Combining more that one tool allows for obtaining the requested joint width. Minimum set consist of one cutter type A and two side cutters type B. Increasing joint width is done by adding a proper number of middle cutters type A. The cutter can be produced with face cutting (formatting) (FZK-14N, joint 4/4,5) or without face cutting (FZK-15N, joint 4/4).

Type of jointing: cross-joint.

Material: solid wood.



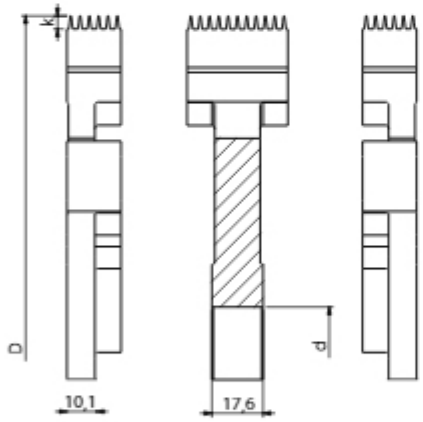

B_R mm	Maximum wood width for pitch 1,6	Number of middle cutters FZK-14A	Number of side cutters FZK-14B
37,2	35	1	2
54,8	53	2	2
72,4	70	3	2
90	88	4	2
107,6	105	5	2
125,2	123	6	2
142,8	140	7	2
160,4	158	8	2

HSS HP

Catalogue number		Type		D mm	B mm	d mm	k mm	z	n_{max}	
FZK14AS250-001	HSS	FZK-14A	middle	250	34,6	50	4/4,5x1,6	6	6000	+
FZK14BS250-01L	HSS	FZK-14B	left	250	18,6	50	4/4,5x1,6	6	6000	+
FZK14BS250-01P	HSS	FZK-14B	right	250	18,6	50	4/4,5x1,6	6	6000	+

With orders for FZK type cutters, please give type of machined material.

Optionally, the tools can be offered with HP coating.

More information on page 4.17.

FZK-11A/11B

High-efficient finger joint brazed cutters, type **FZK-11A/11B** are characterized by increased life thanks to double quantity of working teeth (real z=6). A minimum set consists of one middle cutter type A and two side cutters type B. Obtaining bigger width of the machined material requires only adding the proper quantity of middle cutters type A. Cutters type FZK-11A/11B are available in the version with cutting (formatting) (joint 10/11).

Type of jointing: cross-joint.

Material: solid wood.



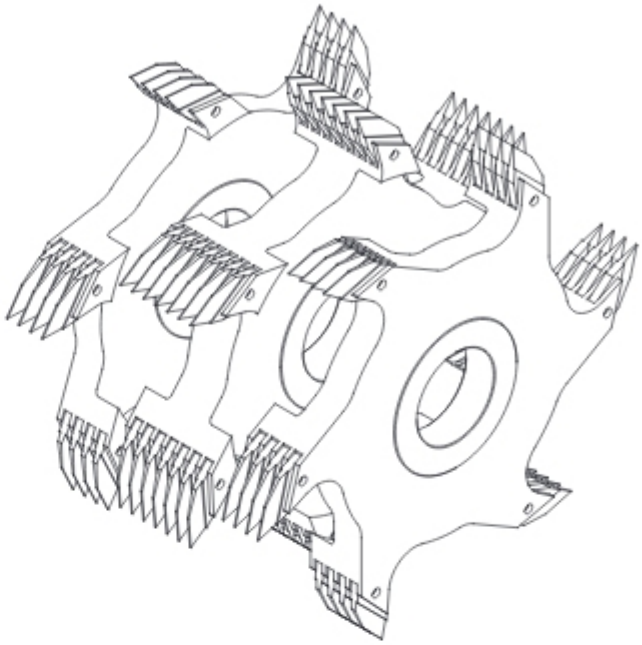

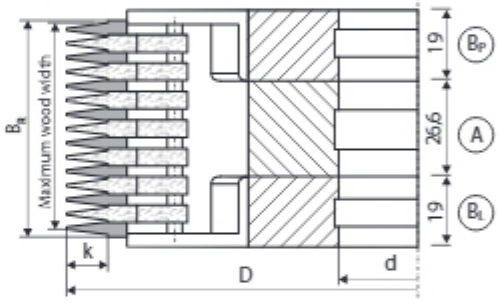

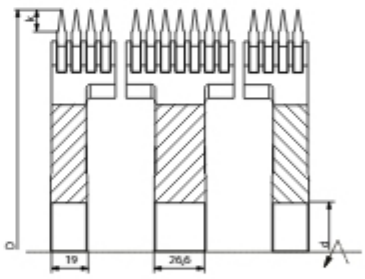

B_k mm	Maximum wood width for pitch 3.8	Number of middle cutters FZK-11A	Number of side cutters FZK-11B
55,2	53	1	2
81,8	79,6	2	2
108,4	106,2	3	2
135,0	132,8	4	2
161,6	159,4	5	2
188,2	186	6	2
214,8	212,6	7	2
241,4	239,2	8	2

HSS HP

Catalogue number		Type		D mm	B mm	d mm	k mm	z	n_{max}	
FZK11AS160-001	HSS	FZK-11A	middle	160	51,4	50	10/11x3,8	4	6000	+
FZK11BS160-01L	HSS	FZK-11B	left	160	28,6	50	10/11x3,8	4	6000	+
FZK11BS160-01P	HSS	FZK-11B	right	160	28,6	50	10/11x3,8	4	6000	+
FZK11AS250-001	HSS	FZK-11A	middle	250	51,4	50	10/11x3,8	6	6000	•
FZK11BS250-01L	HSS	FZK-11B	left	250	28,6	50	10/11x3,8	6	6000	•
FZK11BS250-01P	HSS	FZK-11B	right	250	28,6	50	10/11x3,8	6	6000	•

With orders for FZK type cutters, please give type of machined material.

Optionally, the tools can be offered with HP coating.

More information on page 4.17.

FZK-17A/17B

High-efficient finger joint brazed cutters, type **FZK-17A/17B** are characterized by increased life thanks to double quantity of working teeth. A minimum set consists of one middle cutter type A and two side cutters type B. Obtaining bigger width of the machined material requires only adding the proper quantity of middle cutters type A. Cutters type FZK-17A/17B are available in the version with cutting (formatting) (joint 15/16,5).

Type of jointing: cross-joint.

Material: solid wood.

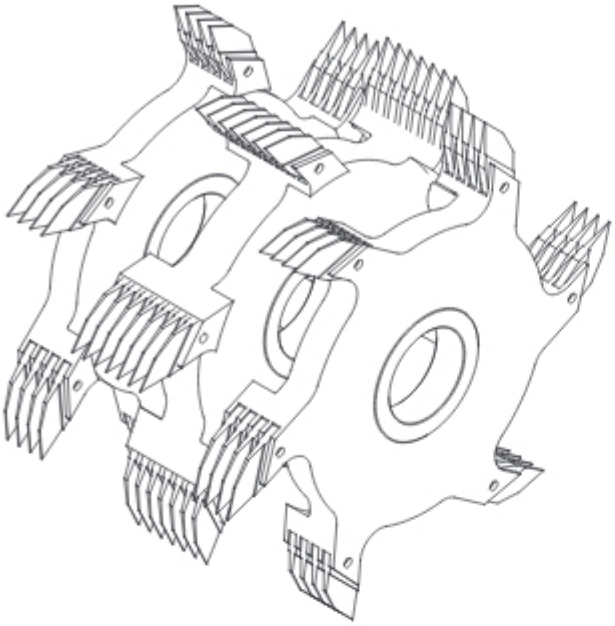



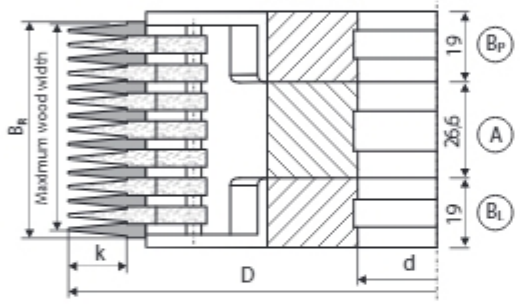

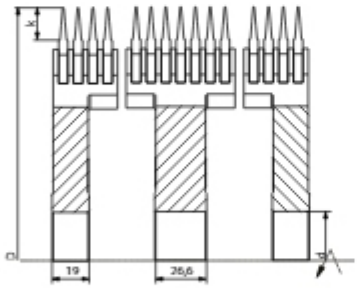

B_R mm	Maximum wood width for pitch 3,8	Number of middle cutters FZK-17A	Number of side cutters FZK-17B
55,2	53	1	2
81,8	79,6	2	2
108,4	106,2	3	2
135,0	132,8	4	2
161,6	159,4	5	2
188,2	186	6	2
214,8	212,6	7	2
241,4	239,2	8	2

Catalogue number		Type		D mm	B mm	d mm	k mm	z	n_{max}	
FZK17AS170-0001	HSS	FZK-17A	middle	170	51,4	50	15/16,5x3,8	4	8000	+
FZK17BS170-01L	HSS	FZK-17B	left	170	36,6	50	15/16,5x3,8	4	8000	+
FZK17BS170-01P	HSS	FZK-17B	right	170	36,6	50	15/16,5x3,8	4	8000	+
FZK17AS260-001	HSS	FZK-17A	middle	260	51,4	50	15/16,5x3,8	6	6000	+
FZK17BS260-01L	HSS	FZK-17B	left	260	36,6	50	15/16,5x3,8	6	6000	+
FZK17BS260-01P	HSS	FZK-17B	right	260	36,6	50	15/16,5x3,8	6	6000	+
FZK17AS350-001	HSS	FZK-17A	middle	350	51,4	80	15/16,5x3,8	8	4500	+
FZK17BS350-01L	HSS	FZK-17B	left	350	36,6	80	15/16,5x3,8	8	4500	+
FZK17BS350-01P	HSS	FZK-17B	right	350	36,6	80	15/16,5x3,8	8	4500	+

With orders for FZK type cutters, please give type of machined material.

Optionally, the tools can be offered with HP coating.

More information on page 4.17.

GZK-11/12

Finger joint cutter heads with exchangeable knives for jointing solid wood. Exceptional precision of the tool guarantees perfectly fitted joint. Knives for the cutter head are available in the version with face cutting (formatting) (GZK-11, joint 10/11) or without cutting (GZK-12, joint 10/10).

Type of jointing: cross-joint.

Material: solid wood.



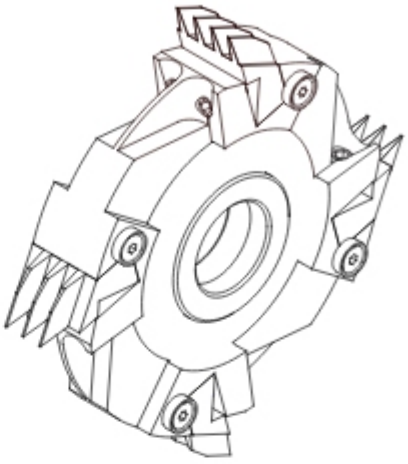

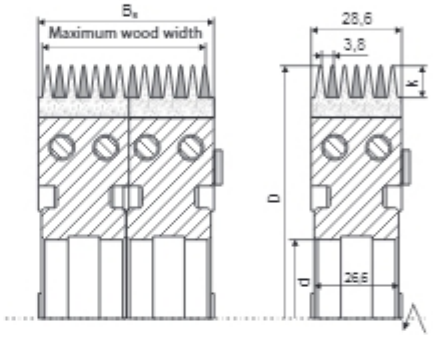

B_R mm	Maximum wood width for pitch 3,8	Number of cutter heads
28,6	24	1
55,2	51	2
81,8	77	3
108,4	104	4
135,0	131	5
161,6	157	6
188,2	184	7
214,8	210	8

HSS HP

D n d z B	160/162 9000 60 2+2 28,6	200/202 7000 60 2+2 28,6	250/252 6000 70 3+3 28,6
GZK-11 10/11x3,8	+	+	+
GZK-12 10/10x3,8	+	+	+

Catalogue number		Type	D mm	B mm	d mm	k mm	z	n_{max}	
GZ11-4164-0	Cutter heads	GZK-11	162	28,6	40	10/11x3,8	2+2	9000	+
GZ11-6164-0	Cutter heads	GZK-11	162	28,6	50	10/11x3,8	2+2	9000	+
GZ11-6256-0	Cutter heads	GZK-11	252	28,6	50	10/11x3,8	3+3	6000	•
GZ12-2164-0	Cutter heads	GZK-12	160	28,6	30	10/10x3,8	2+2	9000	•
GZ12-4164-0	Cutter heads	GZK-12	160	28,6	40	10/10x3,8	2+2	9000	•
GZ12-6164-0	Cutter heads	GZK-12	160	28,6	50	10/10x3,8	2+2	9000	•

Spare parts for cutter heads GZK 11/12

Cat. nr	Name	Type	Dimensions	Quantity	
N2060111 HSS	Knife A	GZK-11	28,6 x 39 x 14	2/3 pcs.	•
N2060112 HSS	Knife B	GZK-11	28,6 x 39 x 14	2/3 pcs.	•
N2060121 HSS	Knife A	GZK-12	28,6 x 38 x 14	2/3 pcs.	•
N2060122 HSS	Knife B	GZK-12	28,6 x 38 x 14	2/3 pcs.	•

Cat. nr	Name	Dimensions	Quantity	
WHAW00005	Clamp screw	M8 x 16	8/12 pcs.	•
WHAT00044	Locating sleeve	Ø12x3,6/6,5	4/6 pcs.	•
WHAS00006	Set screw	M6 x 10	4/6 pcs.	•

With orders for GZK type cutters, please give type of machined material.

Optionally, the knives can be offered with HP coating.

More information on page 8.8.

GZK-11 HM

Finger joint cutter heads with exchangeable knives for jointing solid wood. Exceptional precision of the tool guarantees perfectly fitted joint. Knives for the cutter head are available in the version with face cutting (formatting) (GZK-11, joint 10/11) or without cutting (GZK-12, joint 10/10).

Type of jointing: cross-joint.

Material: solid wood.

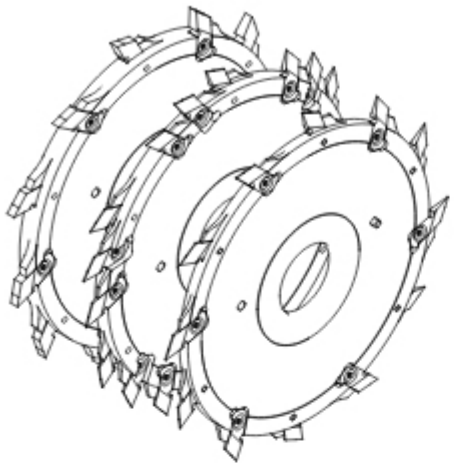

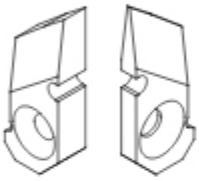

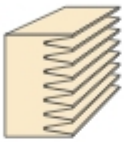

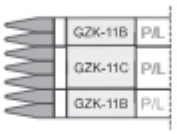

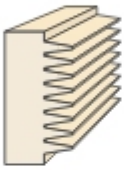

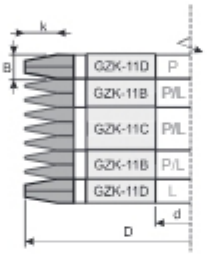

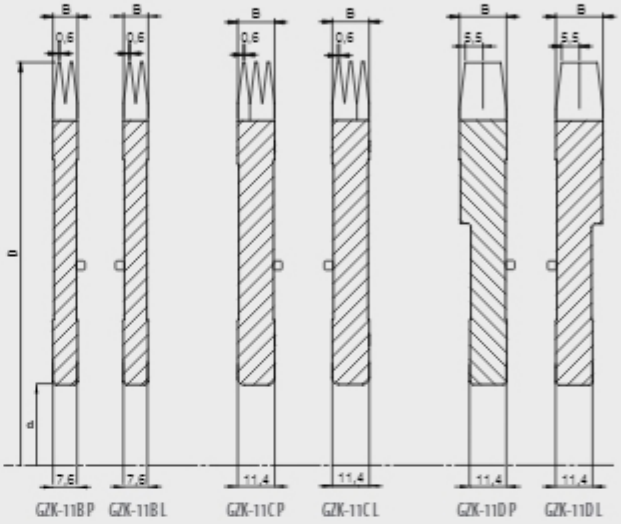





D n d_{max}	160 9000 50	250 6000 70
GZK-11B P/L 7,6/2x3,8	+ z = 4P+4L	+ z = 6P+6L
GZK-11C P 11,4/3x3,8	+ z = 8P+4L	+ z = 12P+6L

D n d_{max}	160 9000 50	250 6000 70
GZK-11D P/L 14,6/2x7,6	+ z = 4P+4L	+ z = 6P+6L
GZK-11C L 11,4/3x3,8	+ z = 4P+8L	+ z = 6P+12L

Catalogue number		Type	D mm	B mm	d mm	k mm	z	n_{max}	
GZ11B6256P	Cutter heads	GZK-11B	250	7,6	50	10/11x3,8	6P+6L	6000	+
GZ11B6256L	Cutter heads	GZK-11B	250	7,6	50	10/11x3,8	6P+6L	6000	+
GZ11C6256P	Cutter heads	GZK-11C	250	11,4	50	10/11x3,8	12P+6L	6000	+
GZ11C6256L	Cutter heads	GZK-11C	250	11,4	50	10/11x3,8	6P+12L	6000	+
GZ11D6256P	Cutter heads	GZK-11D	250	14,6	50		6P+6L	6000	+
GZ11D6256L	Cutter heads	GZK-11D	250	14,6	50		6P+6L	6000	+

Spare parts for cutter heads GZK 11 HM

Cat. nr		Type	Dimensions		
N2060643W	R	GZK-11 HM	3,7 X 38 X 13		+
N2060644W	L	GZK-11 HM	3,7 X 38 X 13		+
N2060645W	R	GZK-11 HM	7,5 X 38 X 13		+
N2060646W	L	GZK-11 HM	7,5 X 38 X 13		+

Cat. nr	Name	Dimensions		
WHAS00008	Screw TOR 1064	M5x6,5		•
WHAS00015	Screw TOR 1065	M5x10		•

GZK-17/18

Finger joint cutter heads with exchangeable knives for jointing solid wood. Exceptional precision of the tool guarantees perfectly fitted joint. Knives for the cutter head are available in the version with face cutting (formatting) (GZK-17, joint 15/16,5) or without cutting (GZK-18, joint 15/15).

Type of jointing: cross-joint.

Material: solid wood.

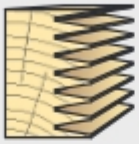

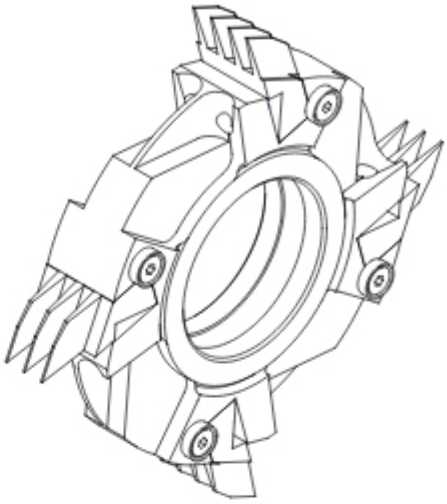

B_k mm	Maximum wood width for pitch 3,8	Number of cutter heads
28,6	24	1
55,2	51	2
81,8	77	3
108,4	104	4
135,0	131	5
161,6	157	6
188,2	184	7
214,8	210	8

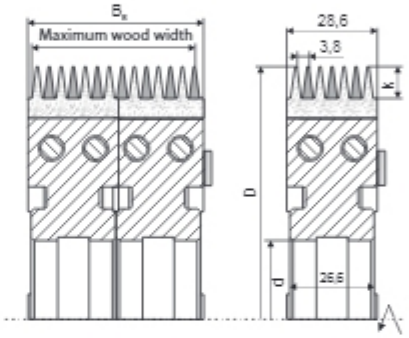

HSS HP

D n max d z B	170 8000 60 2+2 28,6	260 6000 60 3+3 28,6
GZK-17 k=15/16,5x3,8	+	+
GZK-18 k=15/15x3,8	+	+

Catalogue number		Type	D mm	B mm	d mm	k mm	z	n_{max}	
GZ17-6174-0	Cutter heads	GZK-17	170	28,6	50	15/16,5x3,8	2+2	8000	+
GZ17-6266-0	Cutter heads	GZK-17	260	28,6	50	15/16,5x3,8	3+3	6000	+
GZ18-6174-0	Cutter heads	GZK-18	170	28,6	50	15/15x3,8	2+2	8000	+

Spare parts for cutter heads GZK 17/18

Cat. nr	Name	Type	Dimensions	Quantity	
N2060171 HSS	Knife A	GZK-17	28,6 x 43,2 x 14	2/3 pcs.	+
N2060172 HSS	Knife B	GZK-17	28,6 x 43,2 x 14	2/3 pcs.	+
N2060181 HSS	Knife A	GZK-18	28,6 x 44,7 x 14	2/3 pcs.	+
N2060182 HSS	Knife B	GZK-18	28,6 x 44,7 x 14	2/3 pcs.	+

With orders for GZK type cutters, please give type of machined material.

Cat. nr	Name	Dimensions	Quantity	
WHAW00005	Clamp screw	M8 x 16	8/12 pcs.	•
WHAT00044	Locating sleeve	Ø12x3,6/6,5	4/6 pcs.	•
WHAS00006	Set screw	M6 x 10	4/6 pcs.	•

Optionally, the knives can be offered with HP coating.

More information on page 8.8.

GZK-19/20

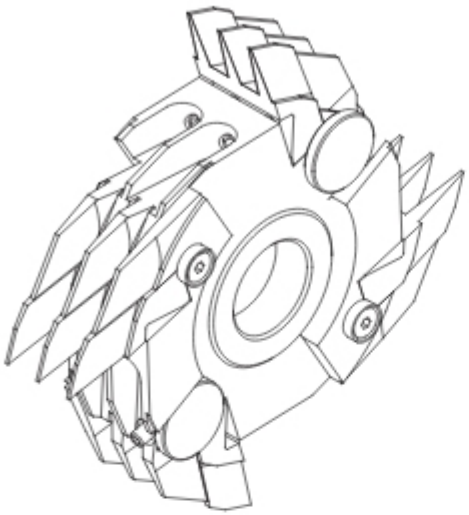

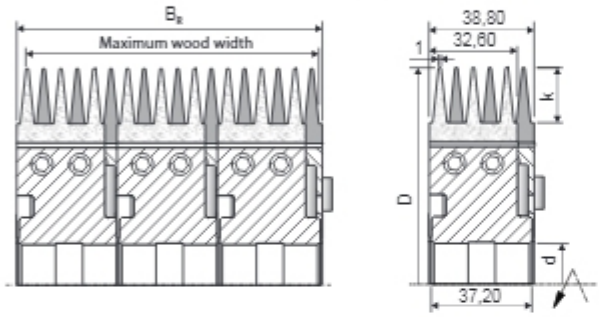

Finger joint cutter heads with exchangeable knives for jointing solid wood. Exceptional precision of the tool guarantees perfectly fitted joint. Knives for the cutter head are available in the version without face cutting (formatting) (GZK-19, joint 20/20) or with face cutting (formatting) (GZK-20, joint 20/22).

Type of jointing: cross-joint.

Material: solid wood.

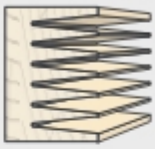

B_n mm	Maximum wood width for pitch 6,2	Number of cutter heads
38,2	34,1	1
75,4	71,3	2
112,6	108,5	3
149,8	145,7	4
187,0	182,9	5
224,2	220,1	6
261,4	257,3	7
298,6	294,5	8



HSS HP

D n d z B	160 9000 30 2+2 38,8	180 7000 50 2+2 38,8	260 6000 50 3+3 38,8
GZK-19 k=20/20x6,2	+	+	+
GZK-20 k=20/22x6,2	+	+	+

Catalogue number		Type	D mm	B mm	d mm	k mm	z	n_{max}	
GZ19-6184-0	Cutter heads	GZK-19	180	38,8	50	20/20 x6,2	2+2	8000	+
GZ20-6184-0	Cutter heads	GZK-20	180	38,8	50	20/22 x6,2	2+2	8000	+
GZ20-6266-0	Cutter heads	GZK-20	260	38,8	50	20/22 x6,2	3+3	6000	+

Spare parts for cutter heads GZK 19/20

Cat. nr	Name	Type	Dimensions	Quantity	
N2060229 HSS	Knife	GZK-19	32,6 x 48,3 x 14	4/6 pcs.	+
N2060201 HSS	Knife	GZK-20	32,6 x 48,3 x 14	4/6 pcs.	+
WHAT00044	Locating sleeve		Ø12x3,6/6,5	4/6 pcs.	•
WHAW00005	Clamp screw		M8 x 16	8/12pcs.	•

Cat. nr	Name	Dimensions	Quantity	
WHAS00006	Set screw	M6 x 10	4 / 6 pcs.	•
WHAW00002	Clamp screw	M5 x 12	2 / 3 pcs.	•
WHAI00114	Locating handwheel	Ø25 x 21	2 / 3 pcs.	•

With orders for GZK type cutters, please give type of machined material.

Optionally, the knives can be offered with HP coating.

More information on page 8.8.

A PERFECT FZK CUTTER
NOW EVEN MORE PERFECT AS FZK HP

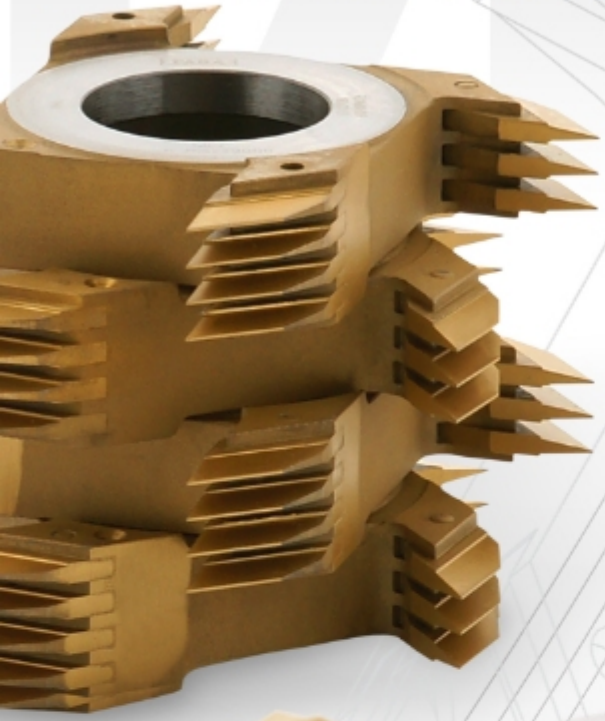

PERFECT JOINTING QUALITY
INCREASED TOOL LIFE

LONGLIFE FZK HP has been improved with special surface coating which significantly increases life of the tool, even several times, depending on the kind of the machined material.

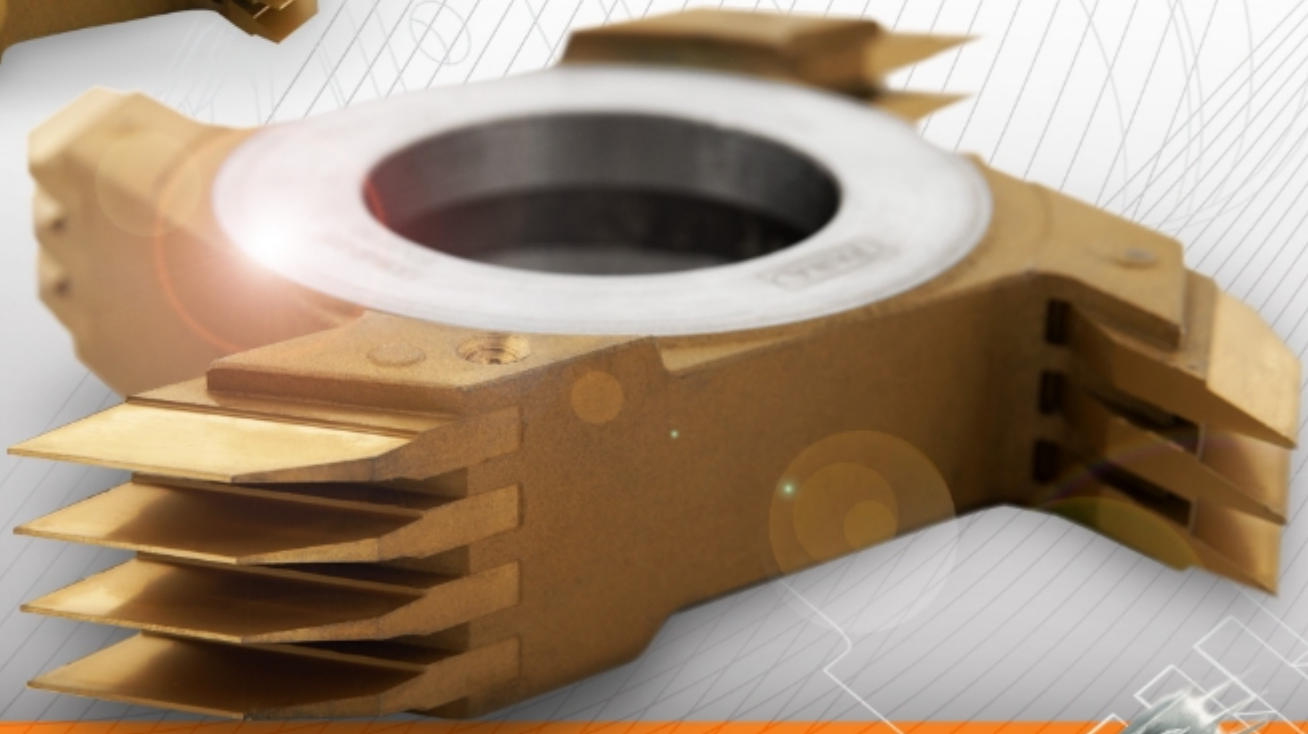

Recently, a very effective method of increasing life of products has been used. The method involves coating the surface of blades with various chemical elements and their compounds. Although the coating is very thin, the coated surfaces are very hard and resistant to abrasion, which significantly increases life of the blade. Such coating improves the economy of production by eliminating frequent regrinding or changing the tools for new ones.



FZK-30

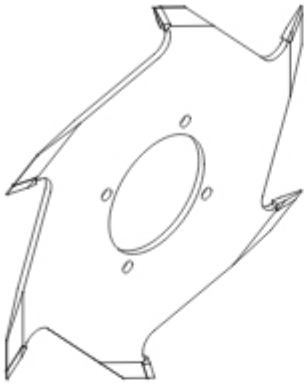

Finger joint brazed cutters with HM tips, type **FZK-30**, for jointing solid and glued wood. The construction of FZK-30 cutters allows for combining them in sets, which enables, in a simple way, to obtain requested width of the machined material. It is guaranteed by the tool width equal to the pitch (t=3,8 mm or t=4,0 mm).

Type of jointing: cross-joint.

Material: solid softwood, glued wood.





4

Type	D mm	B mm	d_{max} mm	k mm	z	n_{max}	
FZK-30	160	4,0	70	10/11x4,0	2	8000	+
FZK-30	160	3,8	70	10/11x3,8	4	8000	+
FZK-30	250	3,8	70	10/11x3,8	6	6000	+

Catalogue number	Type	D mm	t mm	d mm	k	z	Pin holes	n_{max}	
FZK30W160-003	FZK-30	160	3,8	70	10/11x3,8	4		8000	•
FZK30W250-012	FZK-30	250	3,8	70	10/11x3,8	6	4/7/85	6000	•

FZK-30 Plus

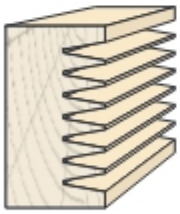

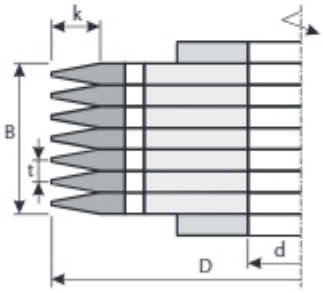

Increased life finger joint brazed cutters with HM tips, type **FZK-30 Plus**, for jointing solid and glued wood. FZK-30 Plus thanks to construction and technological changes guarantees very precise joint, even after multiple regrinding in packets. The changes also significantly increase the life of the tool, up to 3 times longer work (jointing hard wood) compared to standard FZK-30.
Cutters FZK-30 Plus can not be combined in sets with standard cutters FZK-30.

Type of jointing: cross-joint.

Material: solid hardwood, glued wood.





Catalogue number	Type	D mm	t mm	d mm	k	z	Pin holes	n_{max}	
FZK30W160-045	FZK-30 Plus	160	3,8	70	10/11x3,8	4		8000	•
FZK30W250-029	FZK-30 Plus	250	3,8	70	10/11x3,8	6	4/7/85	6000	•

With orders for FZK type cutters, please give type of machined material.

FZK-30-A

Side brazed cutters type **FZK-30-A** are complementary to the set of cutters type FZK-30 and FZK-30 Plus. Joint type "A" is made with a basic set, consisting of FZK-30 or FZK-30 Plus cutters and a set type "A" (basic set plus two side cutters FZK-30-A).

Type of jointing: cross-joint.

Material: solid wood, glued wood.

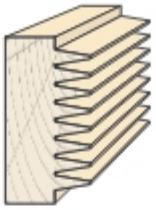

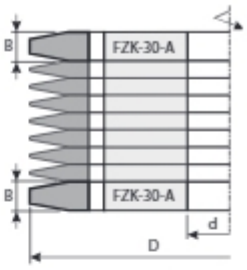

Catalogue number	Type	D mm	B mm	d_{max} mm	z	n_{max}	
FZK30W160-046	FZK-30-A	159,7	11,4	70	4	8000	+
FZK30W250-032	FZK-30-A	249,7	11,4	70	6	6000	•

FZK-30-B1/B2

Side brazed cutters type **FZK-30-B1/B2** are complementary to the set of cutters type FZK-30 and FZK-30 Plus. Joint type "B" is made with one set (basic set plus two side cutters FZK-30-B1/B2) by reversing the profile (element).

Type of jointing: cross-joint.

Material: solid wood, glued wood.

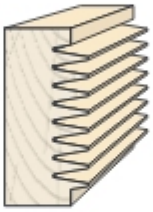

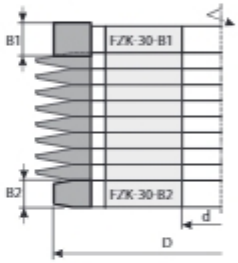

Catalogue number	Type	D mm	B mm	d_{max} mm	z	n_{max}	
FZK30W149-025	FZK-30-B1	149	14,4	70	4	8000	+
FZK30W239-017	FZK-30-B1	239	14,4	70	6	6000	•
FZK30W149-026	FZK-30-B2	149	11,4	70	4	8000	+
FZK30W239-018	FZK-30-B2	239	11,4	70	6	6000	•

Sleeve with a nut, designed for multiple assembly of sets of finger joint cutters, type **FZK-30.** Special construction prevents the nut from getting loose during work. For FZK-30 cutters with diameter D=250 mm mounted on a sleeve, we install flange plates D=175mm in the place of side cutters FZK-30-A or FZK-30-B. Additionally, the set includes spacer rings.

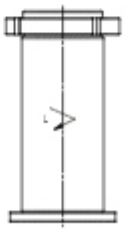

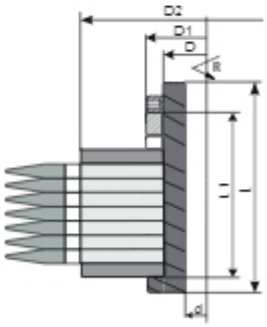

Accessories for FZK-30

Cat. num.	Name		D mm	d mm	L mm	L1 mm	
WHAT01352Z	Sleeve	R	70	50	115	88	•
WHAT01353Z	Sleeve	L	70	50	115	88	•
WHAT03337Z	Sleeve	R	70	50	180	152	•
WHAT03338Z	Sleeve	L	70	50	180	152	•

Sleeve with a nut.

Cat. num.	Name	D1/D2 mm	D mm	B mm	
WHAP01694	Spacer ring	100	70	3,8	•
WHAP00651	Spacer ring	100	70	7,6	•
WHAP00653	Spacer ring	100	70	11,4	•
WHAI01078	Flange plate	175	70	11,4	•

Cutters for longitudinal and cross jointing

Mini-finger joint brazed cutters with small profile depth for reduction of scrap material, designed for production of joint profile for gluing, for precise longitudinal jointing of solid wood.

Type of jointing: longitudinal.

Material:

HSS solid softwood HM solid hardwood





FZK-02

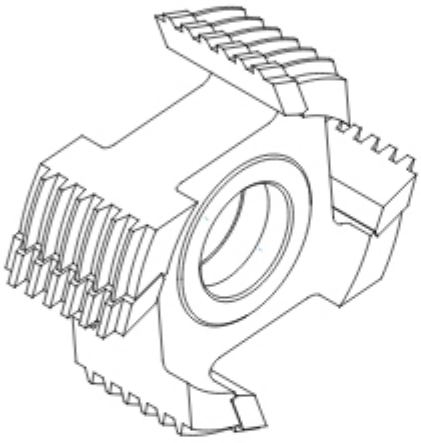

Profile depth 4 mm.
Pitch 8 mm.

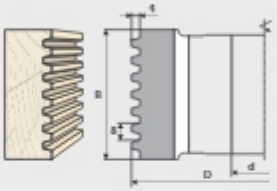

D n d z	120 9000 40 4		140 9000 40 4	
B mm	HSS	HM	HSS	HM
45	+	+	+	+
61	+	+	+	+
77	+	+	+	+
93	+	+	+	+
109	+	+	+	+

FZK-03

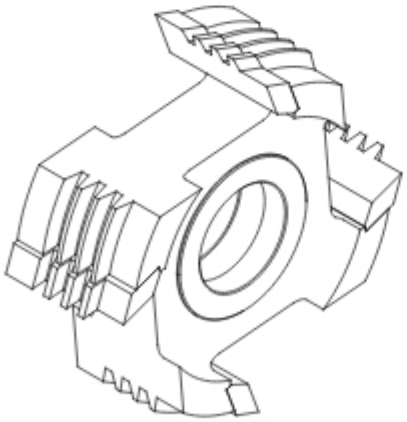

Profile depth 5 mm.

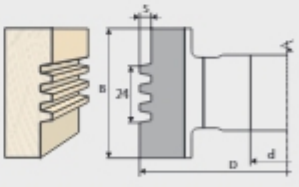

D n d z	125 9000 40 4		140 9000 40 4	
B mm	HSS	HM	HSS	HM
40	+	+	+	+
50	+	+	+	+
55	+	+	+	+

With orders for FZK type cutters, please give type of machined material, type of jointing (longitudinal, cross-joint) and clamping force (manual, mechanical).

Mini-finger joint brazed cutters with small profile depth for reduction of scrap material, designed for production of joint profile for gluing, for precise longitudinal jointing of solid wood.

Type of jointing: longitudinal.

Material:
HSS solid softwood HM solid hardwood





4

FZK-04

Profile depth 5 mm.

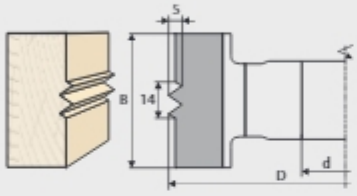

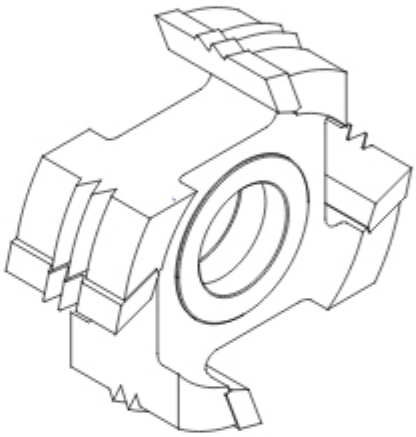

D n d z	125 9000 40 4		140 9000 40 4	
B mm	HSS	HM	HSS	HM
30	+	+	+	+
40	+	+	+	+
50	+	+	+	+

FZK-05

Profile depth 5 mm.
Pitch 7 mm.

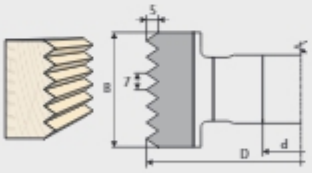

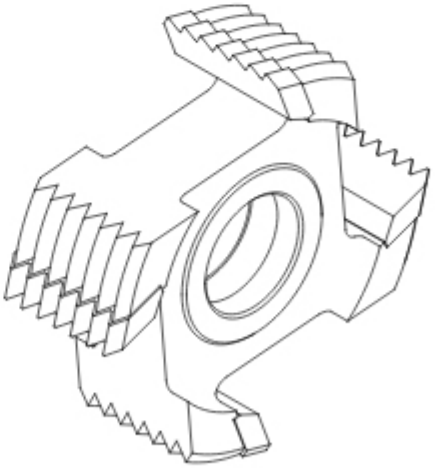

D n d z	125 9000 40 4		140 9000 40 4	
B mm	HSS	HM	HSS	HM
35	+	+	+	+
42	+	+	+	+
49	+	+	+	+
56	+	+	+	+
63	+	+	+	+

With orders for FZK type cutters, please give type of machined material, type of jointing (longitudinal, cross-joint) and clamping force (manual, mechanical).

Cutters for longitudinal and cross jointing

Mini-finger joint brazed cutters with big profile depth for stronger joint, designed for production of joint profile for gluing, for precise jointing of solid wood.

Type of jointing: longitudinal and cross-joint.

Material: solid softwood.





FZK-06

Profile depth 12 mm.

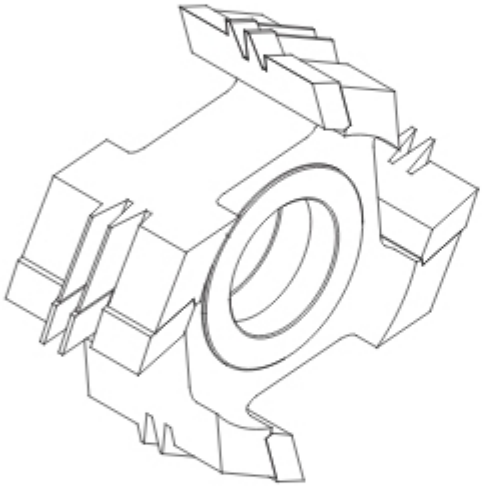

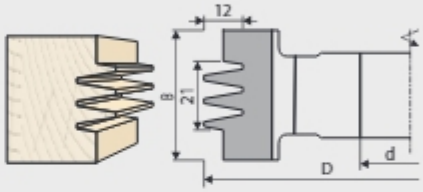

D n d z	120 9000 40 4	140 9000 40 4	160 9000 40 4
B mm	HSS	HSS	HSS
40	+	+	+
50	+	+	+
60	+	+	+

FZK-07

Profile depth 10 mm.

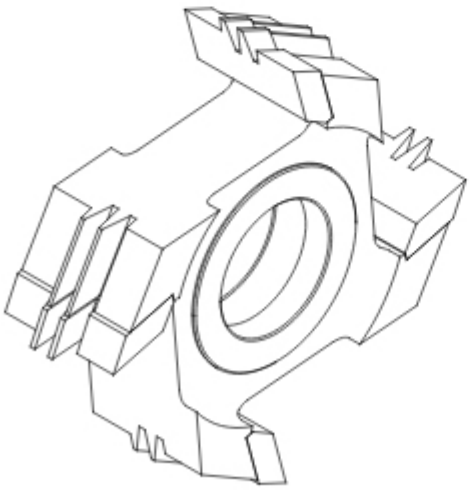

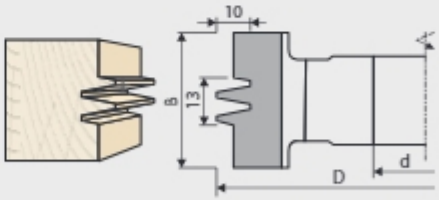

D n d z	120 9000 40 4	140 9000 40 4	160 9000 40 4
B mm	HSS	HSS	HSS
40	+	+	+
50	+	+	+
60	+	+	+

With orders for FZK type cutters, please give type of machined material, type of jointing (longitudinal, cross-joint) and clamping force (manual, mechanical).

FZK-08

Mini-finger joint brazed cutters with small profile depth (6 mm), for reduction of scrap material, designed for production of joint profile for gluing, for precise jointing of solid wood.

Type of jointing: longitudinal and cross-joint.

Material:

HSS solid softwood

HM solid hardwood

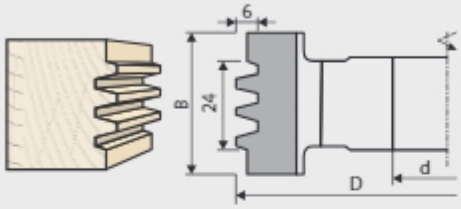

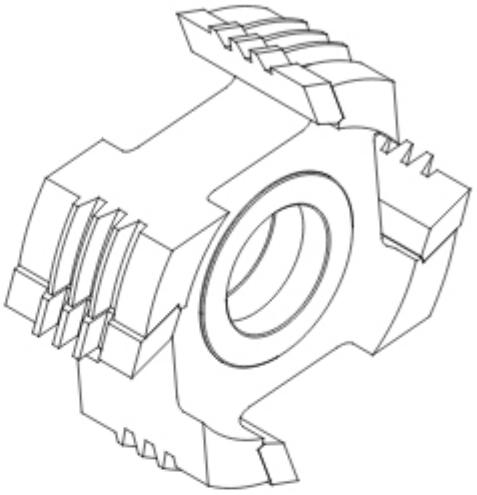

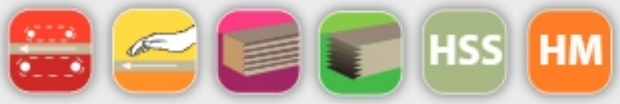



D n d z	125 9000 40 4		140 9000 40 4	
B mm	HSS	HM	HSS	HM
40	+	+	+	+
50	+	+	+	+
55	+	+	+	+

With orders for FZK type cutters, please give type of machined material, type of jointing (longitudinal, cross-joint) and clamping type (manual, mechanical).

ZZK-06 P or L

Set of finger joint brazed cutters for mini-finger joints type **ZZK-06** with regulated number of fingers and big profile depth (12 mm, pitch 7 mm) for stronger joint, designed for production of joint profile for gluing, for precise jointing of solid wood.
Number of fingers is regulated with distance rings within the range from 16 mm to 51 mm and from 23 mm to 65 mm, with pitch 7 mm.

Type of jointing: longitudinal and cross-joint.

Material: solid wood.

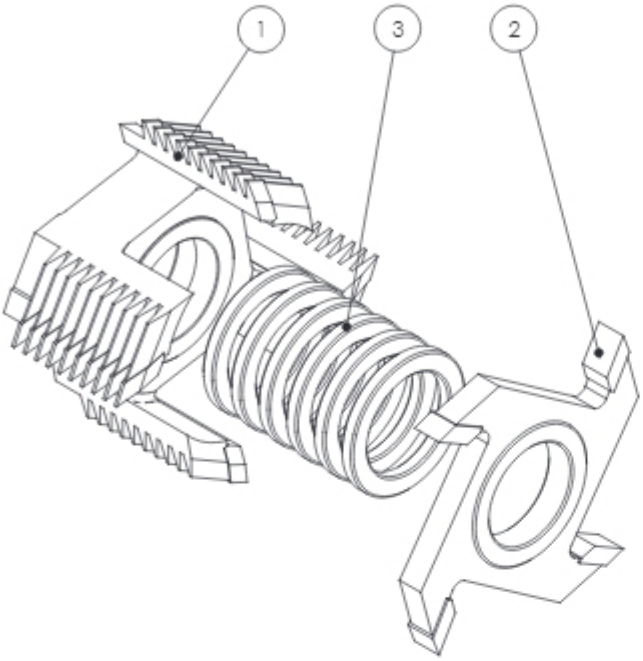

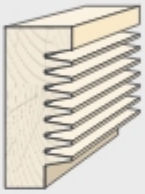

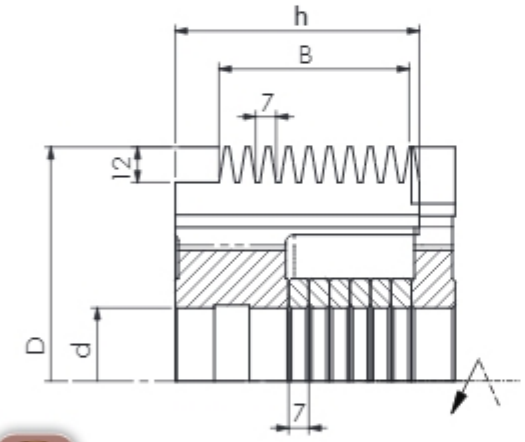



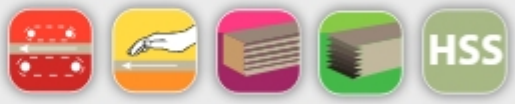

D n d z n	140 9000 50 4 9000	160 9000 50 4 9000
B mm		
16-51	+	+
23-65	+	+

Elements of set of cutters ZZK-06 D=140, B=16-51

	Cat. nr	Name	Dimensions		Quantity	
1.	ZZK06s140A001	Cutter	140 x 69,5/40	4	1	+

	Cat. nr	Name	Dimensions		Quantity	
2.	ZZK06s140B001	Cutter	140 x 15/40	4	1	+
3.	WHAP00109	Distance ring	60/40 x 7		5	+

With orders for ZZK-06 type cutters, please give type of machined material.

GZK-06

Finger joint cutter head, type **GZK-06** with adjustable mini--finger joints. Sliding base rotation allows for setting the size of joint clamping depending on the kind of machined material, technical condition of the machine and clamping force. The number of joints given in the drawing can be changed with the order. Please, agree the required number of joints for a chosen width of the tool with our representative.

Type of jointing: longitudinal and cross-joint.

Material: solid wood, glued wood.

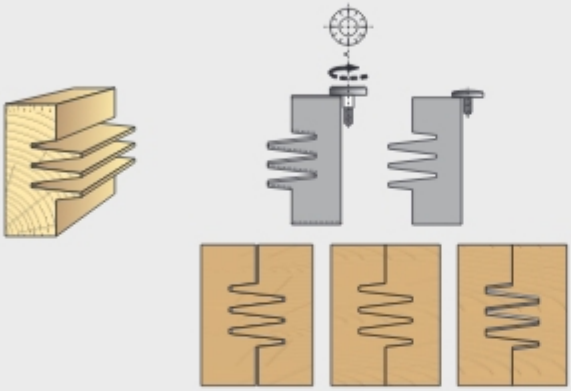



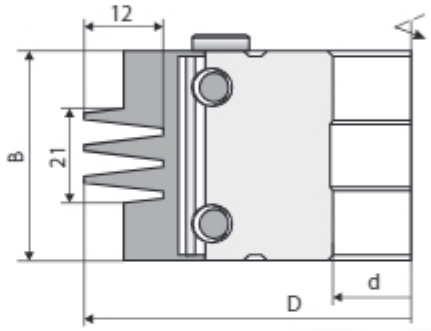

HM

D n d z B mm	125 9000 40 2+2	140 9000 60 2+2	160 9000 60 2+2	160 9000 60 3+3	250 6000 60 3+3	250 6000 60 4+4
20	+	+	+	+	+	+
25	+	+	+	+	+	+
30	+	+	+	+	+	+
35	+	+	+	+	+	+
40	+	+	+	+	+	+
50	+	+	+	+	+	+
60	+	+	+	+	+	+
70	+	+	+	+	+	+
80	+	+	+	+	+	+

Spare parts for cutter heads GZK-06

Cat. nr	Name	Dimensions	Quantity	
	Knife	B x 25 x 2	4/6/8 pcs.	+
	Clamp block	B-2 x 11,5 x 5,5	4/6/8 pcs.	+
WHAT00044	Locating sleeve	Ø12x3,6/6,5	2/3/4 pcs.	+
WHAW00005	Clamp screw	M8 x 16	8/12/16 pcs.	•

Cat. nr	Name	Dimensions	Quantity	
WHAS00006	Set screw	M6 x 10	2/3/4 pcs.	•
WHAW00002	Push screw	M5 x 12	2/3/4 pcs.	•
WHAI00114	Locating handwheel	Ø25 x 21	2/3/4 pcs.	•

With orders for GZK type cutters, please give type of machined material.

GZK-07



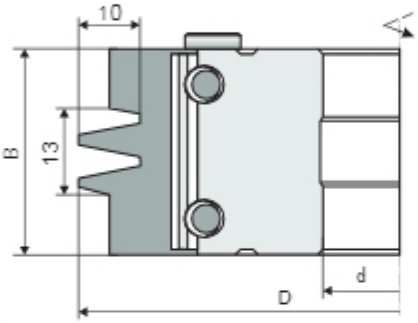

Finger joint cutter head, type **GZK-07** with adjustable mini-finger joints. Sliding base rotation allows for setting the size of joint clamping depending on the kind of machined material, technical condition of the machine and clamping force. The number of joints given in the drawing can be changed with the order. Please, agree the required number of joints for a chosen width of the tool with our representative.

Type of jointing: longitudinal and cross-joint.

Material: solid wood, glued wood.

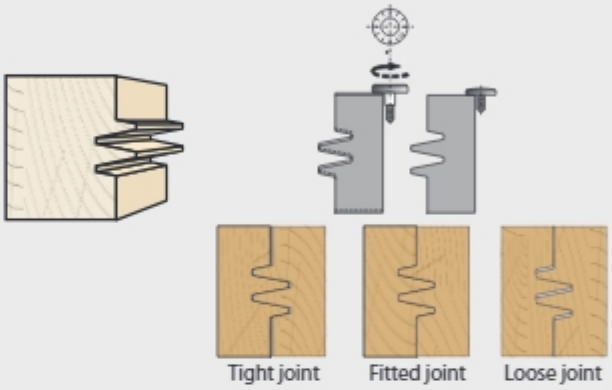

D d z	125 9000 40 2+2	140 9000 60 2+2	160 6000 60 2+2	160 9000 60 3+3	250 6000 60 3+3	250 6000 60 4+4
B mm						
20	+	+	+	+	+	+
25	+	+	+	+	+	+
30	+	+	+	+	+	+
35	+	+	+	+	+	+
40	+	+	+	+	+	+
50	+	+	+	+	+	+
60	+	+	+	+	+	+
70	+	+	+	+	+	+
80	+	+	+	+	+	+

Spare parts for cutter heads GZK-07

Cat. nr	Name	Dimensions	Quantity	
	Knife	B x 25 x 2	4/6/8 pcs.	+
	Clamp block	B-2 x 11,5 x 5,5	4/6/8 pcs.	+
WHAT00044	Locating sleeve	Ø12x3,6/6,5	2/3/4 pcs.	+
WHAW00005	Clamp screw	M8 x 16	8/12/16 pcs.	•

Cat. nr	Name	Dimensions	Quantity	
WHAS00006	Set screw	M6 x 10	2/3/4 pcs.	•
WHAW00002	Push screw	M5 x 12	2/3/4 pcs.	•
WHAI00114	Locating handwheel	Ø25 x 21	2/3/4 pcs.	•

With orders for GZK type cutters, please give type of machined material.

FABA

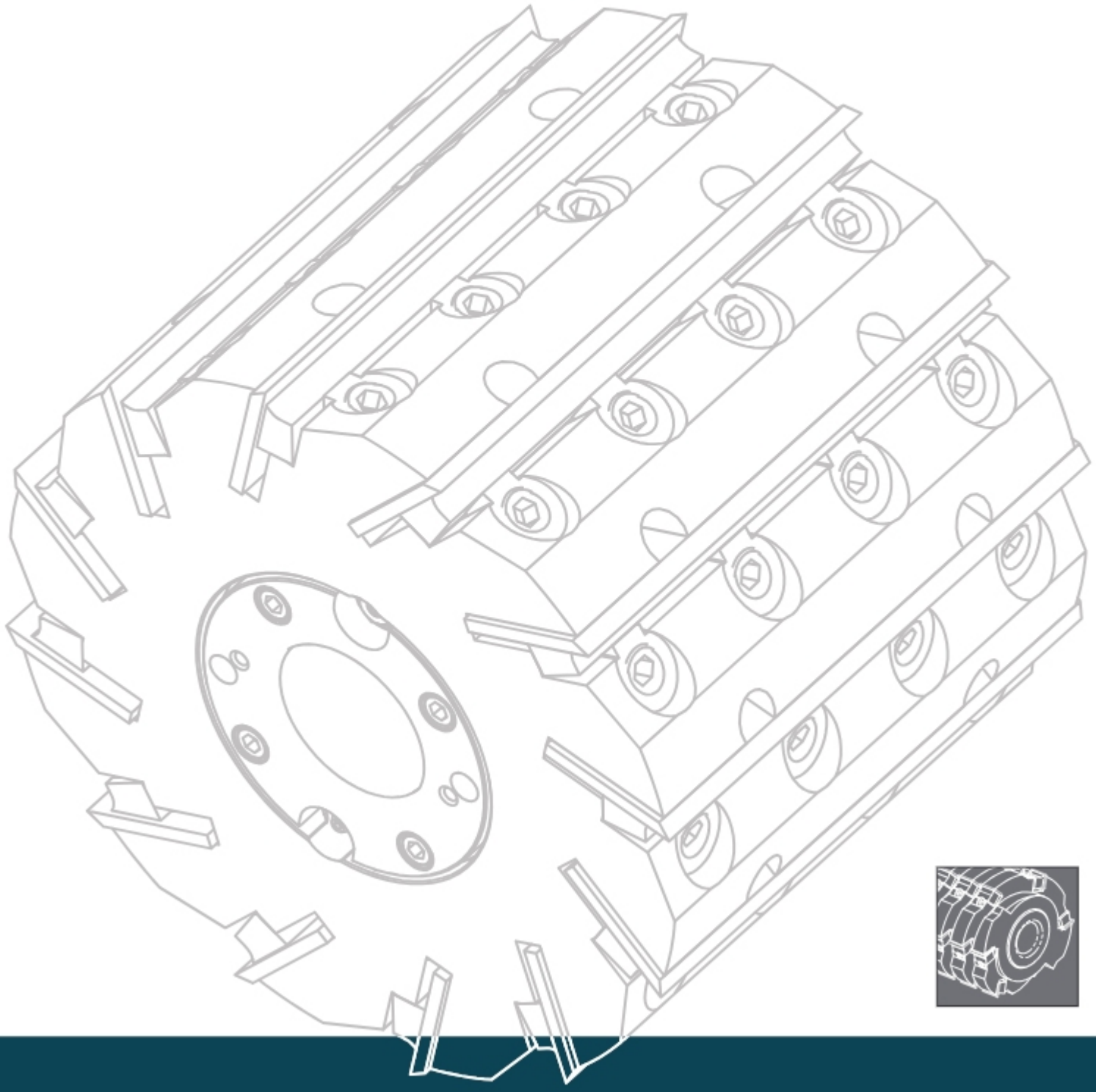

5. Cutter heads

Cutter heads

Planer and pre-planer cutter heads with high speed steel knives (HSS) designed for professional machining of solid soft wood and with carbide (HM) knives designed for professional machining of solid soft and hard wood, glued wood and other wood-based materials. The other type of cutter heads for machining shape surfaces with profile knives (HSS) and carbide shape knives as exchangeable inserts. Knives for cutter heads are made from the highest quality high speed cutting steel in special heat treatment technology, in vacuum heater, which has been properly selected for the type of work, parameters and conditions prevailing during the machining, in order to guarantee proper work of the tool, both in standard and extreme conditions.

The *Cutters heads* chapter includes only example types and models of cutter heads and sets of cutter heads with basic dimensions. Big part of our offer are cutter heads on client's special request, meeting buyer's specific demands. Before we start the designing and production process we take into consideration many issues connected with client's requirements such as expected machining quality, type and parameters of the machine, workpiece material and many others. We also offer special tools with sheer angle, optimized chip flow and hydro clamping, designed for professional, very precise machining of solid wood and other wood-based materials with feed speed up to 200 m/min. Our cutter heads are produced with various clamping types, however, we put special focus on hydro clamping or all types of clamping on HSK shank and HSK 85 clamping. The clamping construction guarantees run-out tolerance reduced to minimum. Thanks to hydro system and HSK 85 which allows for perfect balancing of the tool, we obtain very high surface quality and ability to work with high cutting and feed speed.

Time of design and production process of cutter heads and sets of cutter heads on client's special request usually doesn't exceed 10 working days after agreeing all the details. Standard cutter heads dimensions range withing D_{max} = 400 mm and B_{max} = 350 mm, except spiral cutter heads type G309 and G509, for which B_{max} = 250 mm. In case of machining wider elements, we design and produce sets of cutter heads consisting of several heads.

All types of cutter heads are manufactured on modern CNC machines of world-renowned producers, which guarantee high accuracy and precision of the produced tools. Interoperational and final control verifies tools production and guarantees that every tool sent to the client is manufactured according to technical documentation and standards. The construction and production remains in accordance with all points of safety standard EN/PN-847-1 concerning tools for mechanical woodworking.

Orders should include:

- outer diameter (D) or diameters range,
- bore diameter (d),
- number of teeth (z) or spindle rotation speed and feed speed,
- type of machined material,
- profile drawing with dimensions or profile sample,
- other information relevant for designing and production process.



Contents

5. CUTTER HEADS

Cutter heads coding system 5.3

Pictograms 5.4

Rotation direction 5.4

5.1 Grooving cutter heads 5.5

5.2 Spiral cutters 5.10

5.3 Spiral cutter heads 5.12

5.4 Straight cutter heads 5.18

5.5 Hydro cutter heads 5.24

5.6 Cutter heads with HSK 85 clamping 5.29

5.7 Profile cutter heads 5.32

Cutter heads coding system

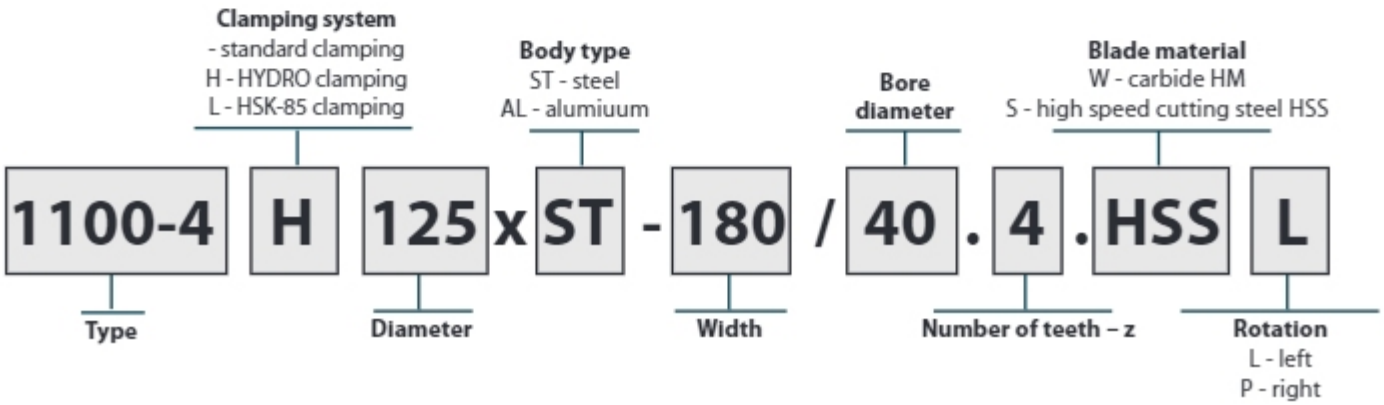

Pictograms

- solid dry softwood
- solid dry hardwood
- chipboard
- glued wood
- MDF
- plastics
- carbide
- high-speed cutting steel
- hydro clamping
- HSK 85 clamping
- steel or aluminiuum body
- flat surfaces
- rebating
- grooving
- edge machining
- profiling
- chip breaking
- mechanical feed
- manual feed
- quiet and steady work

- available / stock product
+ production time 9–15 working days.

Rotation direction

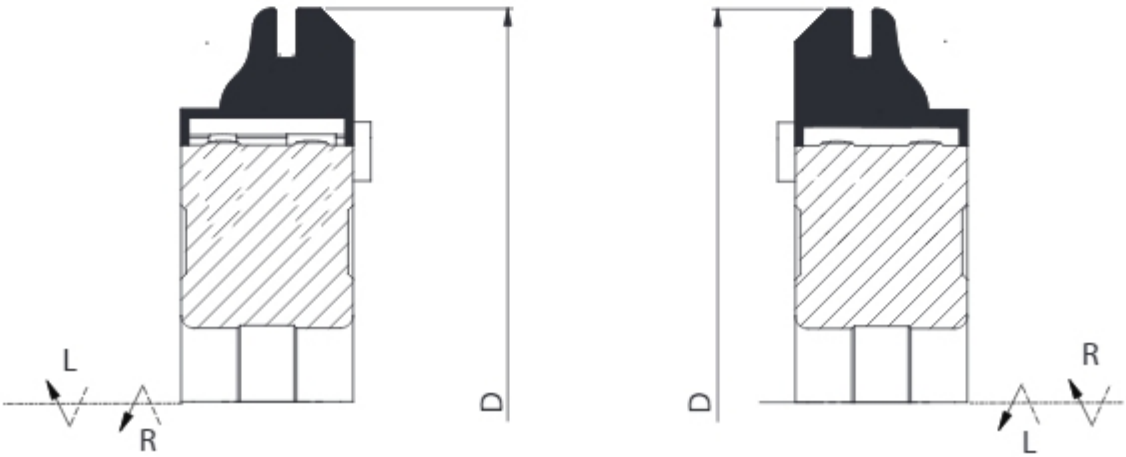

1100-1

Carbide planer head, type **1100-1** with suitable number of cutting teeth, designed for professional machining of wood and wood-based materials such as chipboard, MDF and others. The cutter head is designed for pre-planing and planing. The body is made from steel or aluminum.

Type of work: pre-planing and planing.

Material: hard wood, glued wood, chipboard, MDF.

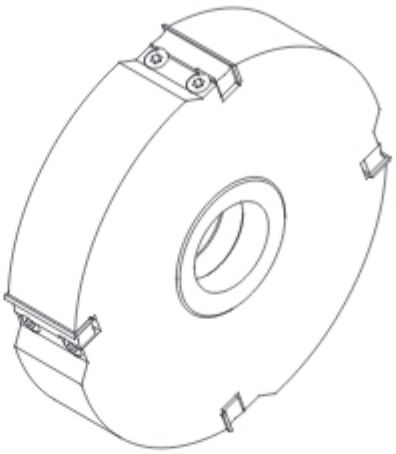

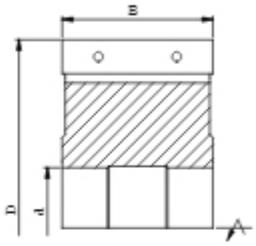

D_{max} = 400 mm, B_{max} = 120 mm



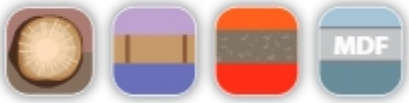

5

D n d z	80 12000 30 2-6		100 9000 30 2-6		125 9000 40 2-6		140 6000 40 2-6		160 6000 40 2-6		180 6000 40 2-6	
B mm	ST	AL	ST	AL	ST	AL	ST	AL	ST	AL	ST	AL
20	+	+	+	+	+	+	+	+	+	+	+	+
25	+	+	+	+	+	+	+	+	+	+	+	+
30	+	+	+	+	+	+	+	+	+	+	+	+
40	+	+	+	+	+	+	+	+	+	+	+	+
50	+	+	+	+	+	+	+	+	+	+	+	+
60	+	+	+	+	+	+	+	+	+	+	+	+
80	+	+	+	+	+	+	+	+	+	+	+	+
100	+	+	+	+	+	+	+	+	+	+	+	+

Catalogue number	Type	Body	D mm	B mm	d mm	z		
G101-080-2504-0	1100-1	ST	80	50	30	4	HM	•
G101-080-2604-0	1100-1	ST	80	60	30	4	HM	+
G101-100-2304-2	1100-1	ST	100	30	30	4	HM	+
G101-100-2504-2	1100-1	ST	100	50	30	4	HM	+
G101-100A2504-2	1100-1	AL	100	50	30	4	HM	+
G101-125-4504-2	1100-1	ST	125	50	40	4	HM	+
G101-125-4506-2	1100-1	ST	125	50	40	6	HM	+
G101-125-4604-3	1100-1	ST	125	60	40	4	HM	+
G101-125A4604-4	1100-1	AL	125	60	40	4	HM	+
G101-160-6406-2	1100-1	ST	160	40	50	6	HM	+

Spare parts for cutter heads 1100-1

Cat. nr	Name	Dimensions		
	Knife	B x 12 x 1,5		+
	Clamping wedge	B-3 x 11,5 x 9		+

Cat. nr	Name	Dimensions		
WHAS00011	Screw TOR 1011	M7 x 20		•

1100-3

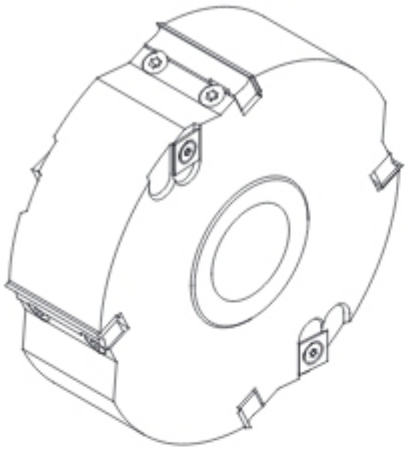

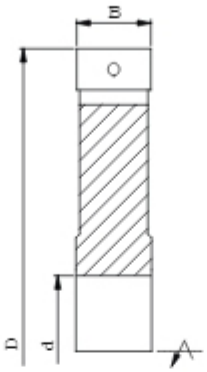

D_{max} = 400 mm, B_{max} = 120 mm

Grooving head, type **1100-3** with suitable number of cutting teeth and left and right spurs, designed for professional machining of wood and wood-based materials such as chipboard, MDF and others. The cutter head is used for precise grooving and rebating. The dimension of machined profiles is equal to cutter's width. The body is made from steel or aluminum.

Type of work: precise grooving and rebating.

Material: hard wood, glued wood, chipboard, MDF, plastics.





5

D n d z	125 9000 40						140 6000 60						160 6000 60						180 6000 60					
	2 v2+2		3 v3+3		4 v2+2		2 v2+2		3 v3+3		4 v2+2		2 v2+2		3 v3+3		4 v2+2		2 v2+2		3 v3+3		4 v2+2	
Bmm	ST	AL	ST	AL	ST	AL	ST	AL	ST	AL	ST	AL	ST	AL	ST	AL	ST	AL	ST	AL	ST	AL	ST	AL
20	+	+	+	+	+	+	+	+	+	+	+	+	+	+	+	+	+	+	+	+	+	+	+	+
25	+	+	+	+	+	+	+	+	+	+	+	+	+	+	+	+	+	+	+	+	+	+	+	+
30	+	+	+	+	+	+	+	+	+	+	+	+	+	+	+	+	+	+	+	+	+	+	+	+
40	+	+	+	+	+	+	+	+	+	+	+	+	+	+	+	+	+	+	+	+	+	+	+	+
50	+	+	+	+	+	+	+	+	+	+	+	+	+	+	+	+	+	+	+	+	+	+	+	+
60	+	+	+	+	+	+	+	+	+	+	+	+	+	+	+	+	+	+	+	+	+	+	+	+
80	+	+	+	+	+	+	+	+	+	+	+	+	+	+	+	+	+	+	+	+	+	+	+	+
100	+	+	+	+	+	+	+	+	+	+	+	+	+	+	+	+	+	+	+	+	+	+	+	+

Catalogue number	Type	Body	D mm	B mm	d mm	z		
G103-125-2202-2	1100-3	ST	125	20	30	2 v2+2	HM	+
G103-125A2204-2	1100-3	AL	125	20	30	4 v2+2	HM	+
G103-125-2302-2	1100-3	ST	125	30	30	2 v2+2	HM	+
G103-125-2404-4	1100-3	ST	125	40	30	4 v2+2	HM	+
G103-125A2404-4	1100-3	AL	125	40	30	4 v2+2	HM	+
G103-125-2504-4	1100-3	ST	125	50	30	4 v2+2	HM	+
G103-125A2504-4	1100-3	AL	125	50	30	4 v2+2	HM	+
G103-160-2404-0	1100-3	ST	160	40	30	4 v2+2	HM	+

Spare parts for cutter heads 1100-3

Cat. nr	Name	Dimensions		
	Knife	B-0,4 x 12 x 1,5		+
N0000818	Knife	14 x 14 x 2		•
	Clamping wedge	B-2 x 11,5 x 9		+

Cat. nr	Name	Dimensions		
WHAS00011	Screw TOR 1011	M7 x 20		•
WHAS00008	Screw TOR 1064	M5 x 6,5		•

1100-3 set

Set of grooving heads type **1100-3**, with suitable number of cutting teeth and left and right spurs, designed for professional machining of solid wood. The set is used for machining guide grooves for precise transportation of short and curved elements on the machine bed. The body is made from steel or aluminum.

Type of work: machining guide grooves.

Material: solid wood, hard and soft.

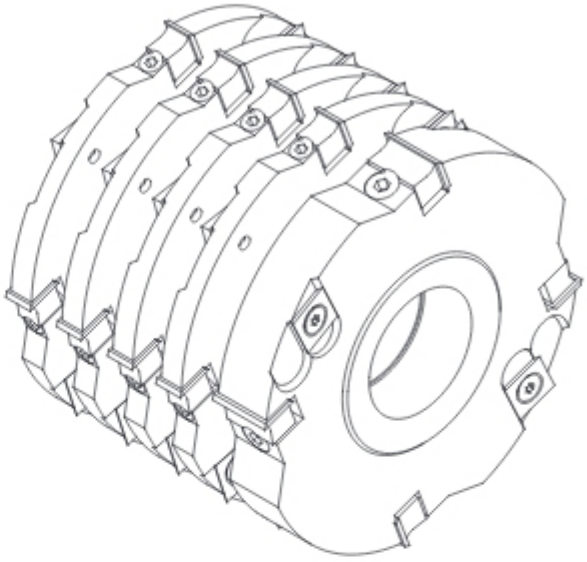

B mm	Number of cutter heads B1	Number of cutter heads B2
80	3	1
100	4	1
120	5	1
140	6	1
170	8	1

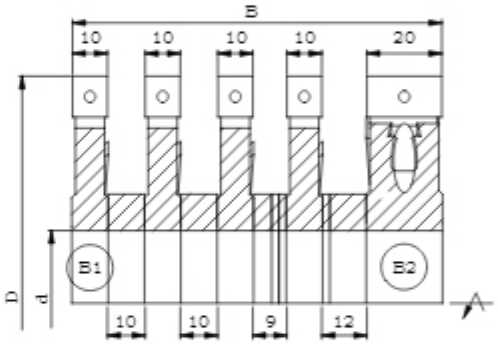

HM ST/AL

D n d z	125 9000 40						140 9000 40					
	2 v2+2		3 v3+3		4 v2+2		2 v2+2		3 v3+3		4 v2+2	
Bmm	ST	AL	ST	AL	ST	AL	ST	AL	ST	AL	ST	AL
80	+	+	+	+	+	+	+	+	+	+	+	+
100	+	+	+	+	+	+	+	+	+	+	+	+
120	+	+	+	+	+	+	+	+	+	+	+	+
140	+	+	+	+	+	+	+	+	+	+	+	+
170	+	+	+	+	+	+	+	+	+	+	+	+

Spate parts for set of cutter heads

Cat. nr	Name	Dimensions		
N0000802	Knife	9,6x12x1,5		•
N0000594	Knife	20,6x12x1,5		+
N0000818	Knife	14x14x2		•
WHAKA0025	Clamping wedge	8x11,5x9		•

Cat. nr	Name	Dimensions		
WHAKA0010	Support block	18x11,5x9		•
WHAS00011	Screw TOR 1011	M7x20		•
WHAS00007	Screw TOR 1262	M5x23		•
WHAS00008	Screw TOR 1064	M5 x 6,5		•

GR set of 2 heads

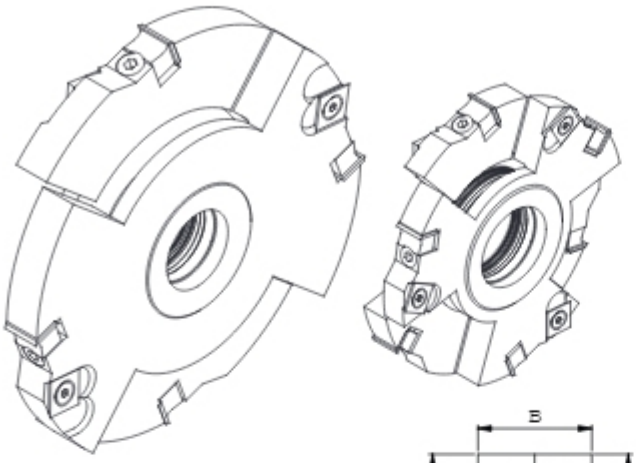

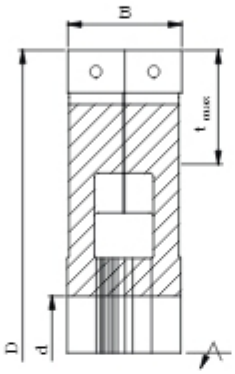

Set of adjustable grooving heads type **GR** with suitable number of cutting teeth and left and right spurs, designed for professional machining of wood and wood-based materials such as chipboard, MDF and others. The set of heads is used for grooving and rebating. Width is regulated with spacer rings (in increments of 0,1 mm) included in the set. The body is made from steel or aluminum.

Type of work: precise grooving and rebating.

Material: hard wood, glued wood, veneered wood, chipboard, MDF.



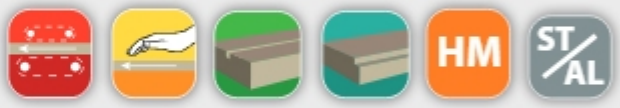

D d z t	125 9000 40 2+2 v2+2 20		140 6000 60 2+2 v2+2 25		140 6000 60 3+3 v3+3 25		160 6000 60 2+2 v2+2 30		160 6000 60 3+3 v3+3 30		180 6000 60 2+2 v2+2 35		180 6000 60 4+4 v4+4 35	
B mm	ST	AL	ST	AL	ST	AL	ST	AL	ST	AL	ST	AL	ST	AL
8÷15	+		+		+		+		+		+		+	
10÷19	+	+	+	+	+	+	+	+	+	+	+	+	+	+
12÷22,50	+	+	+	+	+	+	+	+	+	+	+	+	+	+
12,50÷24	+	+	+	+	+	+	+	+	+	+	+	+	+	+
15,50÷30	+	+	+	+	+	+	+	+	+	+	+	+	+	+
20,50÷40	+	+	+	+	+	+	+	+	+	+	+	+	+	+
25÷49	+	+	+	+	+	+	+	+	+	+	+	+	+	+
30,50÷60	+	+	+	+	+	+	+	+	+	+	+	+	+	+
40,50÷80	+	+	+	+	+	+	+	+	+	+	+	+	+	+
50,50÷100	+	+	+	+	+	+	+	+	+	+	+	+	+	+
60,50÷120	+	+	+	+	+	+	+	+	+	+	+	+	+	+

Spate parts for set of cutter heads

Cat. nr	Name	Dimensions		
	Knife	(B/2+0,5)x12x1,5		+
N0000818	Spur	14x14x2		•
	Clamping wedge	B-2/2,5x11,5x9		+

Cat. nr	Name	Dimensions		
WHAS00007	Screw	M5x23		•
WHAS00011	Screw TOR 1011	M7x20		•

On special request, we offer the set consisting of 3 cutter heads.

GR set B 4-15

Set of adjustable grooving heads, type **GR** with two cutting teeth and two left and two right spurs (z=2 v2+2), designed for professional machining of wood and wood-based materials such as chipboard, MDF and others. The set of heads is used for precise grooving and rebating. Width is regulated with spacer rings (in increments of 0,1 mm) included in the set. Width B=4-7,5 mm when working with 2-element set, B=4-15 mm when working with 3-element set.

Type of work: precise grooving and rebating.

Material: hard wood, glued wood, veneered wood, chipboard, MDF.

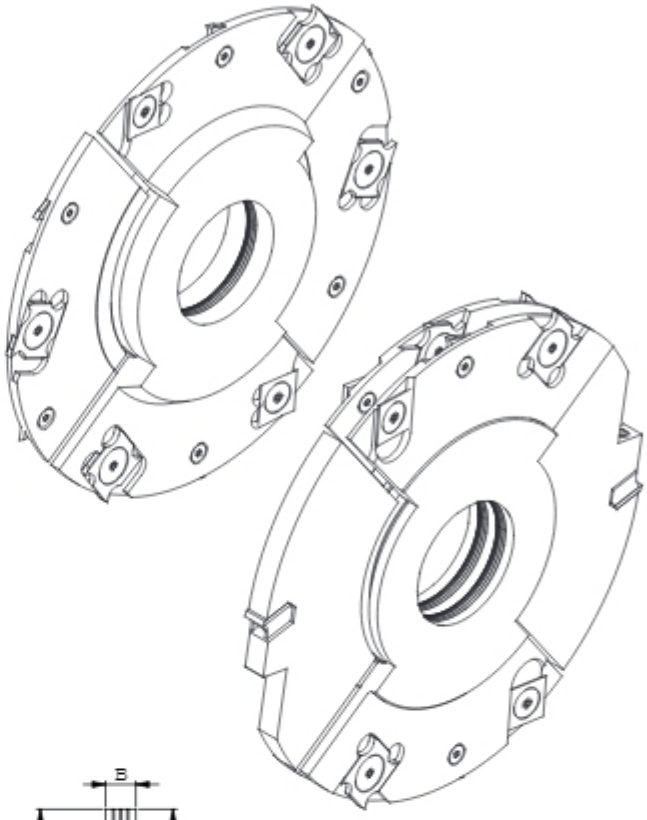

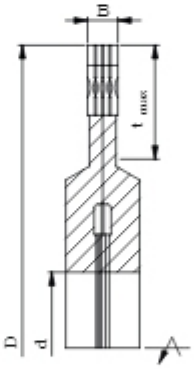

D n d z t	120 9000 35 2 v2+2 20	125 9000 40 2 v2+2 20	130 6000 40 2 v2+2 25	150 6000 50 2 v2+2 30	160 6000 60 2 v2+2 30	180 6000 60 2 v2+2 35
B mm						
4-7,5	+	+	+	+	+	+
4-15	+	+	+	+	+	+

Spate parts for set of cutter heads

Cat. nr	Name	Dimensions	
N0000801	Knife	7,5x12x1,5	•
N0000706	Knife	18x18x1,95	•
N0000817	Spur	14x14x1,2	•
WHAKA0348	Clamping wedge	7,5x11,5x5,8	•

Cat. nr	Name	Dimensions	
WHAS00054	Screw 1402	M4x0,5	•
WHAS00056	Nut with washer	M4x0,5	•
WHAW00004	Screw DIN915	M6x16	•

FS-01/FS-06 P or L

Spiral brazed cutters, **FS-01** type with increased number of cutting teeth and **FS-06** type with increased life and axial angle, designed for professional finishing of wood or wood-based materials such s chipboard, MDF and others. The cutters are used for machining flat surfaces with big number of knags and multidirectional fibre system. The cutter is adapted to machining material with allowance up to 4 mm.

Type of work: planing flat material surfaces with numerous knags and multidirectional fibre system.

Material: solid hard wood, chipboard, MDF.

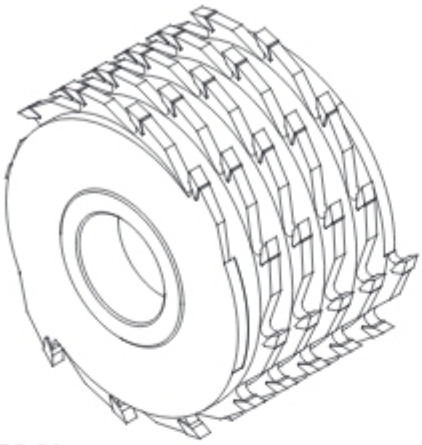

FS-01

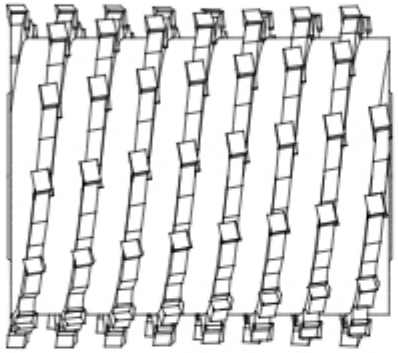

FS-06

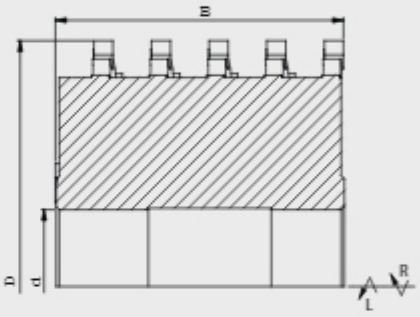





D d z	100 9000 40 12	125 9000 50 12	140 6000 50 12	160 6000 60 12	180 6000 60 12
B mm					
40	+	+	+	+	+
60	+	+	+	+	+
80	+	+	+	+	+
100	+	+	+	+	+
120	+	+	+	+	+
160	+	+	+	+	+
180	+	+	+	+	+
200	+	+	+	+	+
240	+	+	+	+	+

Catalogue number right	Catalogue number left	Type	D mm	B mm	d mm	z		
FS01W100P0002	FS01W100L0002	FS-01	100	56,25	30	12 (36)	HM	+
FS01W100P0031	FS01W100L0031	FS-01	100	160	35	12 (96)	HM	+
FS01W125P0006	FS01W125L0006	FS-01	125	100	40	12 (60)	HM	+
FS01W140P0018	FS01W140L0018	FS-01	140	80	35	12 (48)	HM	+
FS01W140P0020	FS01W140L0020	FS-01	140	120	35	12 (72)	HM	+

FS-02/FS-07

Spiral brazed cutters with chip breaker, **FS-02** straight type and **FS-07** type with increased life and axial angle, designed for professional roughing of wood or wood-based materials such s chipboard, MDF and others. The cutters are used for machining flat surfaces with big number of knags and multidirectional fibre system. The cutter is adapted to machining material with allowance up to 4 mm.

Type of work: pre-planing flat material surfaces with numerous knags and multidirectional fibre system.

Material: solid hard wood, chipboard, MDF.

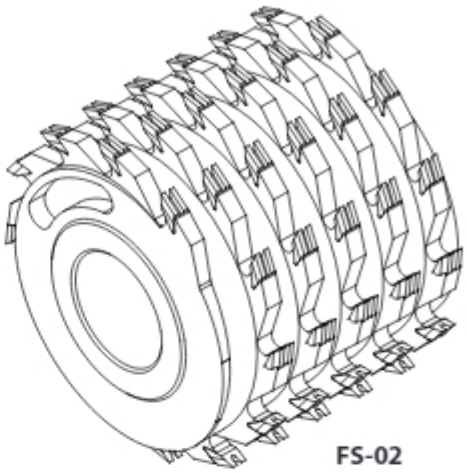

FS-02

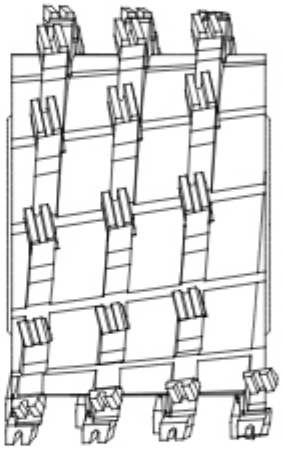

FS-07





D n d z B mm	100 9000 40 12	125 9000 50 12	140 6000 50 12	160 6000 60 12	180 6000 60 12
40	+	+	+	+	+
60	+	+	+	+	+
80	+	+	+	+	+
100	+	+	+	+	+
120	+	+	+	+	+
160	+	+	+	+	+
180	+	+	+	+	+
200	+	+	+	+	+
240	+	+	+	+	+

G1115

Spiral inserted cutter head, type **G1115** with six cutting teeth, designed for professional machining of wood and wood-based materials such as chipboard and others. The cutter head is used for pre-cutting flat surfaces with multi-directional fibre system. The cutter head is adapted to machining materials with allowance up to 8 mm. The body is made from steel or aluminum.

Type of work: pre-cutting flat surfaces with multidirectional fibre system.

Material: hard wood, veneered board, chipboard, MDF.

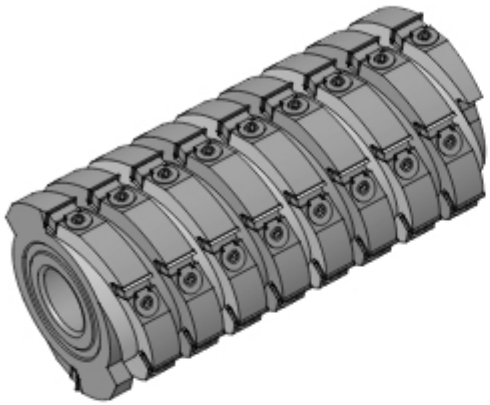

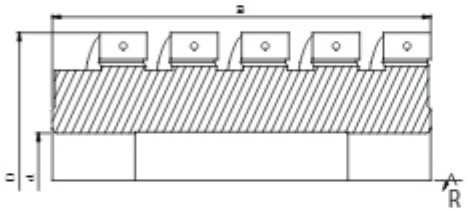



















D B d z		100 9000 30 2+2+2		125 9000 40 2+2+2		140 6000 40 2+2+2	
B mm	Number of knives	ST	AL	ST	AL	ST	AL
40	6	+	+	+	+	+	+
60	10	+	+	+	+	+	+
80	14	+	+	+	+	+	+
100	18	+	+	+	+	+	+
120	22	+	+	+	+	+	+
160	30	+	+	+	+	+	+
180	34	+	+	+	+	+	+
200	38	+	+	+	+	+	+

Catalogue number	Type	Body	D mm	B mm	d mm	z			
G1115R100A2086-0	G1115	AL	100	80	30	2+2+2(14)	HM	R	+
G1115R100-3106-0	G1115	ST	100	100	35	2+2+2(18)	HM	R	+
G1115R125A4186-0	G1115	AL	125	180	40	2+2+2(34)	HM	R	+
G1115R140A3106-0	G1115	AL	140	100	35	2+2+2(18)	HM	R	+

Spare parts for cutter heads G1115

Cat. nr	Name	Dimensions		
N0000805	Knife	20 x 12 x 1,5		•
WHAKA0543P	Clamping wedge	17 x 11 x 7		+

Cat. nr	Name	Dimensions		
WHAS00045	Screw TOR 1011	M8L/M8P x 22		+
WHAI01346	Nut TOR 24260	M8L		+

G109

Spiral inserted planer head, type **G109** with four cutting teeth, designed for professional machining of solid wood. The cutter head is used for pre-planing. Spiral head design and big number of cutting teeth allow for higher feed speed and guarantee optimal workload of the machine spindle. The cutter head is adapted to machining materials with allowance up to 10 mm. The body is made from steel or aluminum.

Type of work: pre-planing.
Material: solid wood, hard and soft.

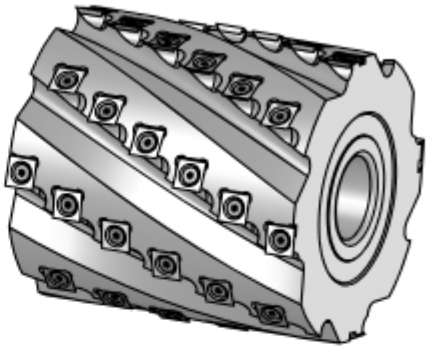

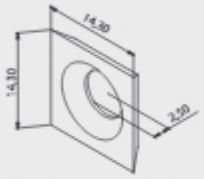

Cutting blade dimensions.

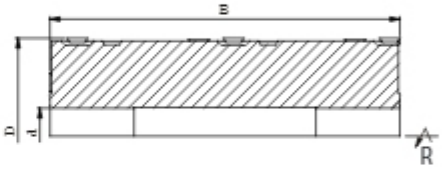





D B d z		100 9000 40 4+4		125 9000 50 4+4		140 6000 60 4+4	
B mm	Number of knives	ST	AL	ST	AL	ST	AL
80	24	+	+	+	+	+	+
100	32	+	+	+	+	+	+
120	40	+	+	+	+	+	+
150	48	+	+	+	+	+	+
230	72	+	+	+	+	+	+

Catalogue number	Type	Body	D mm	B mm	d mm	z			
G109-100-2104P-0	G109	ST	100	100	30	4+4 (32)	HM	R	+
G109-125-2124P-0	G109	ST	125	120	30	4+4 (40)	HM	R	+
G109-125A2124P-0	G109	AL	125	120	30	4+4 (40)	HM	R	+
G109-125-4234P-0	G109	ST	125	230	40	4+4 (72)	HM	R	+
G109-140-4104P-0	G109	ST	140	100	40	4+4 (32)	HM	R	+

Spare parts for cutter heads G109

Cat. nr	Name	Dimensions		
N0000839	Knife	14,3 x 14,3 x 2,5		•

Cat. nr	Name	Dimensions		
WHAS00015	Screw TOR 1065	M5x10		•

Above diameter D=140 mm, hydro clamping (d=50 mm) can be offered.

G209

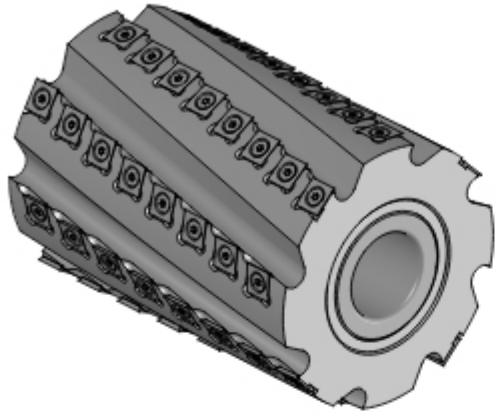

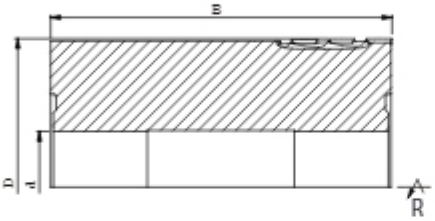

Spiral inserted planer head, type **G209** with four cutting teeth, designed for professional machining of solid wood. The cutter head is used for pre-planing. Spiral head design and big number of cutting teeth allow for higher feed speed and guarantee optimal workload of the machine spindle. The cutter head is adapted to machining materials with allowance up to 10 mm. The body is made from steel or aluminum.

Type of work: pre-planing.

Material: solid wood, hard and soft.

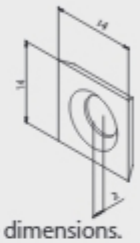

Cutting blade dimensions.



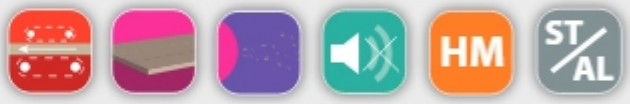

D B d z		100 9000 40 4+4		125 9000 50 4+4		140 6000 60 4+4	
B mm	Number of knives	ST	AL	ST	AL	ST	AL
80	28	+	+	+	+	+	+
100	36	+	+	+	+	+	+
120	44	+	+	+	+	+	+
150	52	+	+	+	+	+	+
230	84	+	+	+	+	+	+

Catalogue number	Type	Body	D mm	B mm	d mm	z			
G209-100-2084-0	G209	ST	100	80	30	4+4 (28)	HM	R	+
G209-100A2084-2	G209	AL	100	80	30	4+4 (24)	HM	R	+
G209-100-2104-0	G209	ST	100	100	30	4+4 (36)	HM	R	+
G209-100A4104-0	G209	AL	100	100	40	4+4 (36)	HM	R	+
G209-125-4124-0	G209	ST	125	120	40	4+4 (44)	HM	R	+
G209-125A4124-0	G209	AL	125	120	40	4+4 (44)	HM	R	+
G209-125-4234-0	G209	ST	125	230	40	4+4 (84)	HM	R	+
G209-125A4234-0	G209	AL	125	230	40	4+4 (84)	HM	R	+
G209-140-4104-0	G209	ST	140	100	40	4+4 (36)	HM	R	+
G209-140A4104-0	G209	AL	140	100	40	4+4 (36)	HM	R	+

Spare parts for cutter heads G209

Cat. nr	Name	Dimensions		
N0000818	Knife	14 x 14 x 2,0		•

Cat. nr	Name	Dimensions		
WHAS00015	Screw TOR 1065	M5x10		•

Above diameter D=140 mm, hydro clamping (d=50 mm) can be offered.

G309

Spiral inserted planer head, type **G309** with four cutting teeth, designed for professional machining of solid wood. The cutter head is used for finishing flat surfaces. Spiral head design and big number of cutting teeth allow for higher feed speed and guarantee optimal workload of the machine spindle. Special profile inserts allow to obtain high quality of the machined surface. The cutter head is adapted to finishing materials with allowance up to 10mm. The body is made from steel or aluminum.

Type of work: planing flat surfaces.

Material: solid wood, hard and soft.

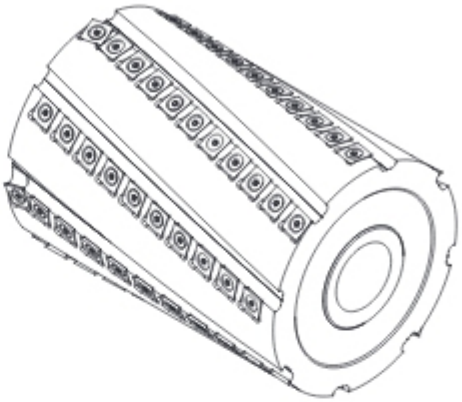

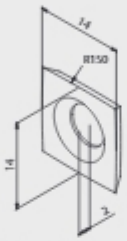

Cutting blade dimensions.

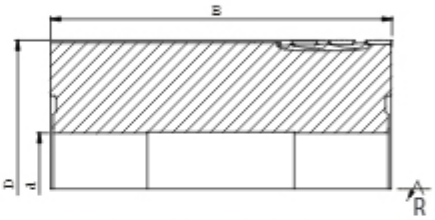

D_{max} = 400 mm, B_{max} = 250 mm





D B d max z		100 9000 40 4+4		125 9000 50 4+4		140 6000 60 4+4	
B mm	Number of knives	ST	AL	ST	AL	ST	AL
80	32	+	+	+	+	+	+
100	40	+	+	+	+	+	+
120	48	+	+	+	+	+	+
150	60	+	+	+	+	+	+
230	100	+	+	+	+	+	+

Catalogue number	Type	Body	D mm	B mm	d mm	z			
G309-100-4104-B	G309	ST	100	100	40	4+4 (40)	HM	R	+
G309-100A4104-B	G309	AL	100	100	40	4+4 (40)	HM	R	+
G309-125-4124-B	G309	ST	125	120	40	4+4 (48)	HM	R	+
G309-125A4124-B	G309	AL	125	120	40	4+4 (48)	HM	R	+
G309-125-4234-B	G309	ST	125	230	40	4+4 (100)	HM	R	+
G309-140-4104-B	G309	ST	140	100	40	4+4 (40)	HM	R	+

Spare parts for cutter heads G309

Cat. nr	Name	Dimensions	R	
N00000710	Knife	14 x 14 x 2,0	150	•

Cat. nr	Name	Dimensions	
WHAS00015	Screw TOR 1065	M5x10	•

Above diameter D=140 mm, hydro clamping (d=50 mm) can be offered.

G509

Spiral inserted planer head, type **G509** with three cutting teeth, designed for professional machining of solid wood. The cutter head is used for finishing flat surfaces. Spiral head design and big number of cutting teeth allow for higher feed speed and guarantee optimal workload of the machine spindle. Special profile inserts allow to obtain high quality of the machined surface. The cutter head is adapted to machining materials with allowance up to 10 mm. The body is made from steel or aluminum.

Type of work: planing flat surfaces.

Material: solid wood, hard and soft.

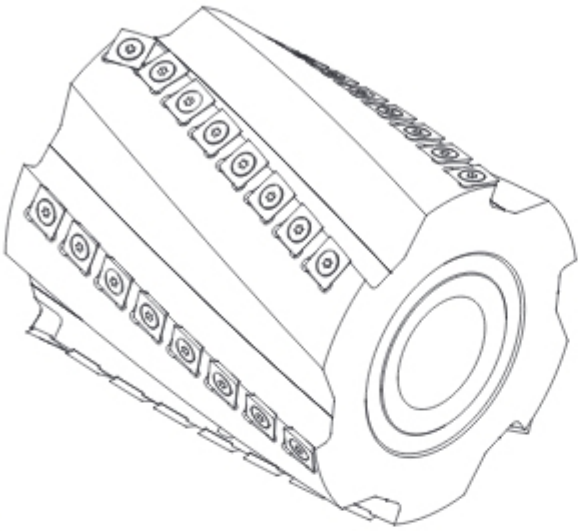

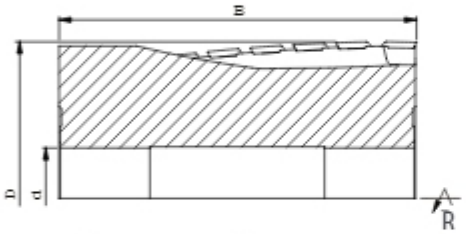

D_{max} = 400 mm, B_{max} = 250 mm

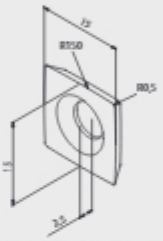

Cutting blade dimensions.

D B d z		100 9000 40 3+3		125 9000 50 3+3		140 6000 60 3+3	
B mm	Number of knives	ST	AL	ST	AL	ST	AL
100	27	+	+	+	+	+	+
130	36	+	+	+	+	+	+
160	48	+	+	+	+	+	+
240	72	+	+	+	+	+	+

Catalogue number	Type	Body	D mm	B mm	d mm	z			
G509-140-5163P-B	G509	ST	140	160	45	3+3 (48)	HM	R	+

Spare parts for cutter heads G509

Cat. nr	Name	Dimensions	R1/R2		
N0000733	Knife	15 x 15 x 2,5	150/0,5		•

Cat. nr	Name	Dimensions		
WHAS00015	Screw TOR 1065	M5x10		•

Above diameter D=140 mm, hydro clamping (d=50 mm) can be offered.

G709H

Spiral cutter head type **G709H** hydro for professional machining of solid wood. The cutter head is designed for pre-planing flat surfaces. Axial positioning of cutting teeth. Helical flutes guarantees efficient chip flow. Big number of cutting teeth allows for very high feed speed and optimal workload of the machine spindle. The cutter head is adapted to pre--planing with allowance up to 10 mm. The body is made of steel or aluminum.
Screw used in cutter heads with ALU body.

Type of work: pre-planing.

Material: solid wood, hard and soft.

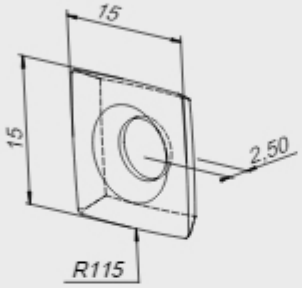

Cutting blade dimensions.

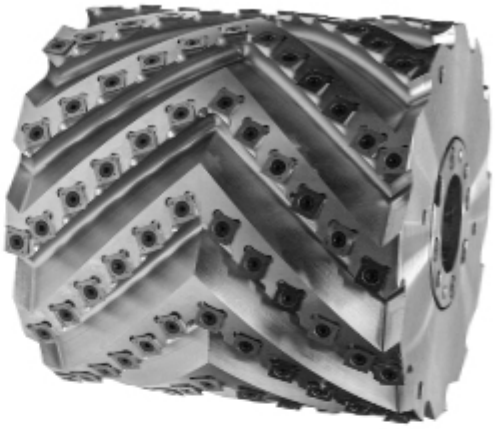

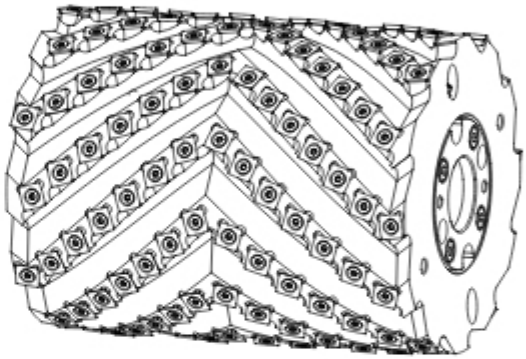

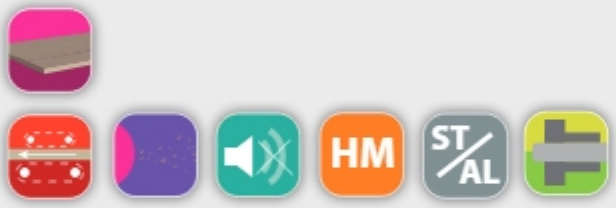



D n d z	160 6000 50 4+4		180 6000 60 5+5		200 6000 70 6+6	
B mm	ST	AL	ST	AL	ST	AL
100	+	+	+	+	+	+
120	+	+	+	+	+	+
160	+	+	+	+	+	+
200	+	+	+	+	+	+
235	+	+	+	+	+	+

Catalogue number	Type	Body	D mm	B mm	d mm	z	Filling system	
G709-180S52205-B	G709H	ST	180	200	45	5+5 (110)	C	+
G709-180G62356-C	G709H	ST	180	235	50	6+6 (144)	C	+
G709-200SA2356-B	G709H	ST	200	235	70	6+6 (144)	A	+
G709-200S52656-B	G709H	ST	200	265	45	6+6 (168)	A	+

Spare parts for cutter heads G709H

Cat. nr	Name	Dimensions	R		
N0000777	Knife	15 x 15 x 2,5	115		•

Hydro cutter heads - page 5.24

Cat. nr	Name	Dimensions		
WHAS00209	Screw TOR 1065	M6x17		•
WHAS00015*	Screw TOR 1065	M5x10		•

* screw used in cutter heads with AL body.

1100-14

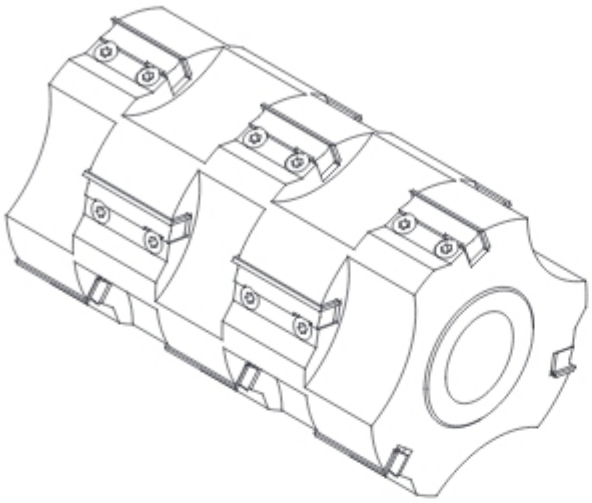

Monolithic inserted planer head, type **1100-14** with suitable number of cutting teeth, designed for professional machining of solid wood. The cutter head is used for pre-planing. Regular insert size is 50x12x1,5 mm, but to increase cutter head size range it is possible to use inserts 40x12x1,5 mm and 60x12x1,5 mm. The body is made from steel or aluminum.

Type of work: pre-planing.

Material: solid hard wood.

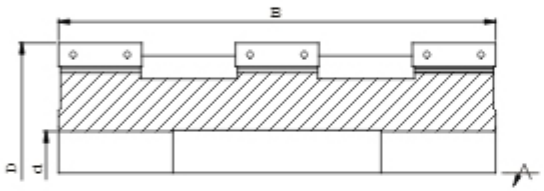





D n_{max} d_{max} z	125 9000 50 2		125 9000 50 3		125 9000 50 4	
B mm	ST	AL	ST	AL	ST	AL
98	+	+	+	+	+	+
146	+	+	+	+	+	+
194	+	+	+	+	+	+
242	+	+	+	+	+	+

Catalogue number	Type	Body	D mm	B mm	d mm	z		
G114-125-4128-0	1100-14	ST	125	120	40	4	HM	+
G114-125-4014-0	1100-14	ST	125	146	40	2	HM	+
G114-125-4216-0	1100-14	ST	125	210	40	3	HM	+

Spare parts for cutter heads 1100-14

Cat. nr	Name	Dimensions		
N0000810	Knife	50x12x1,5		•

Cat. nr	Name	Dimensions		
WHAKA0043	Clamping wedge	47x11,5x9		+
WHAS00011	Screw TOR 1011	M7x20		•

1100-4 with profile knives

Planer head, type **1100-4** with suitable number of cutting teeth and additional grooving, rounding and beveling knives, designed for professional machining of solid wood. The cutter head is used for finishing flat surfaces and edge profiling of the machined material at the same time. The adjustment of knives height is made with springs. Optionally, the head can be equipped with knives FKB-45° and FKB-R. The body is made from steel or aluminum.

Type of work: pre-planing and planing with edge profiling.

Material: solid hard and soft wood.

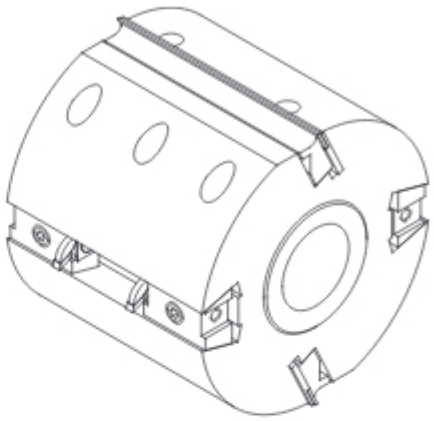

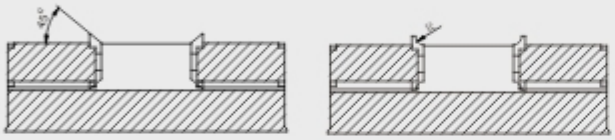

Optional solutions.

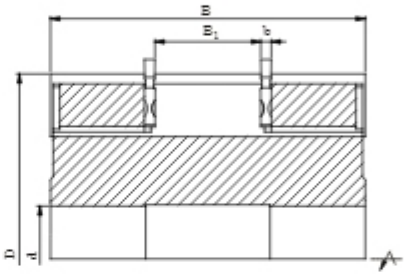





5

D n d z	125 9000 40 2≤2+2		135 9000 40 2≤2+2		140 6000 40 3≤3+3		150 6000 50 3≤3+3		160 6000 60 3≤3+3	
B mm	ST	AL	ST	AL	ST	AL	ST	AL	ST	AL
60	+	+	+	+	+	+	+	+	+	+
80	+	+	+	+	+	+	+	+	+	+
100	+	+	+	+	+	+	+	+	+	+
130	+	+	+	+	+	+	+	+	+	+
150	+	+	+	+	+	+	+	+	+	+
180	+	+	+	+	+	+	+	+	+	+
230	+	+	+	+	+	+	+	+	+	+

Catalogue number (without knives)	Type	Body	D mm	B mm	B_1 mm	d mm	z	
G01-0735-3	1100-4	ST	140	130	10-130	40	2+2	+
G01-0382-3	1100-4	AL	140	130	10-140	40	2+2	+

Spare parts for cutter heads 1100-4

Cat. nr	Name	Dimensions		
	Knife	B x 30 x 3		+
	Hook knife	24 x 13 x b		+
N0000870	Knife FKB-45°	16 x 22 x 5		•
	Knife FKB-R	16 x 22 x 5		+
	Clamping wedge	B-3 x 23 x 11		+

Cat. nr	Name	Dimensions		
WHAK00277	Clamping wedge	37 x 29 x 16		
WHAK00358	Clamping wedge FKB	37 x 29 x 16		•
WHAW00007	Nut DIN 915M	M10 x 20		•
WHAI00001	Spring	9,5 x 40		•

Please give type of profile knives (page 8.11) and stright knives (page 8.6-8.7) with the order.

1100-4

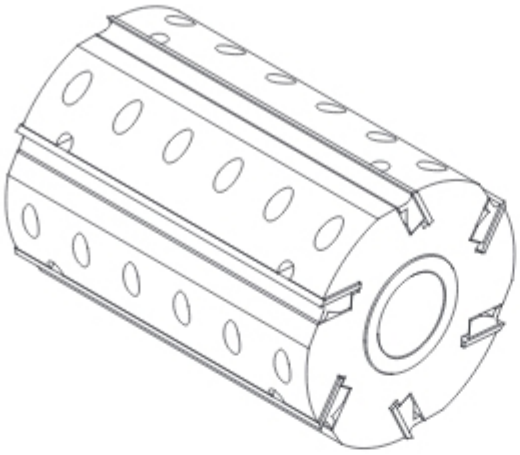

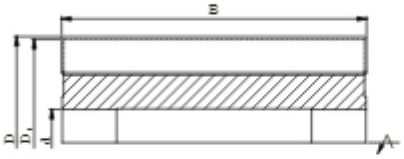

Inserted planer head, type **1100-4** with suitable number of cutting teeth, designed for professional machining of solid wood. The cutter head is used for finishing flat surfaces. The adjustment of knives height is made with springs. The head 1100-4 is adapted to pre-planing materials with allowance up to 5 mm and planing materials with allowance up to 0,8 mm. The body is made from steel or aluminum.

Type of work: pre-planing and planing.

Material:
- HSS solid soft wood
- HM solid hard wood

D D_1 n d z b (knife)	125 122 9000 40 4 3		140 137 6000 50 4 3		160 157 6000 60 4 3		160 157 6000 60 6 3		180 177 6000 60 4 3		180 177 6000 60 6 3		180 177 6000 60 8 3	
B mm	ST	AL	ST	AL	ST	AL	ST	AL	ST	AL	ST	AL	ST	AL
60	+	+	+	+	+	+	+	+	+	+	+	+	+	+
80	+	+	+	+	+	+	+	+	+	+	+	+	+	+
100	+	+	+	+	+	+	+	+	+	+	+	+	+	+
130	+	+	+	+	+	+	+	+	+	+	+	+	+	+
150	+	+	+	+	+	+	+	+	+	+	+	+	+	+
160	+	+	+	+	+	+	+	+	+	+	+	+	+	+
180	+	+	+	+	+	+	+	+	+	+	+	+	+	+
200	+	+	+	+	+	+	+	+	+	+	+	+	+	+
230	+	+	+	+	+	+	+	+	+	+	+	+	+	+

Catalogue number (without knives)	Type	Body	D mm	B mm	d mm	z	
A104-122-4064-0	1100-4	ST	125	60	40	4	•
A104-122-4104-0	1100-4	ST	125	100	40	4	•
A104-122-4134-0	1100-4	ST	125	130	40	4	•
A104-122A4134-0	1100-4	AL	125	130	40	4	•
A104-122-4154-0	1100-4	ST	125	150	40	4	•
A104-122-4164-0	1100-4	ST	125	160	40	4	•
A104-122A4164-0	1100-4	AL	125	160	40	4	•
A104-122-4184-0	1100-4	ST	125	180	40	4	•
A104-122-4234-0	1100-4	ST	125	230	40	4	•
A104-122A4234-0	1100-4	AL	125	230	40	4	•

Spare parts for cutter heads 1100-4

Cat. nr	Name	Dimensions	
	Knife	B x 30 x 3	+
	Clamping wedge	B-3 x 24 x 11	+

Cat. nr	Name	Dimensions	
WHAW00007	Clamping screw	M10 x 20	•

Please, give knives type with the order - catalogue page 8.6 - 8.7.

1100-5

Multi-teeth planer head, type **1100-5** with suitable number of cutting teeth, designed for professional machining of solid wood. The cutter head is used for pre-planing and planing. The adjustment of knives height is made with springs. Increased number of cutting teeth allows for higher feed speed, within the range of 80-180 m/min. and guarantees optimal workload of the machine spindle. The head 1100-5 is adapted to pre-planing materials with allowance up to 5 mm and planing materials with allowance up to 0,8 mm. The body is made from steel or aluminum.

Type of work: pre-planing and planing.

Material:

- HSS solid soft wood
- HM solid hard wood

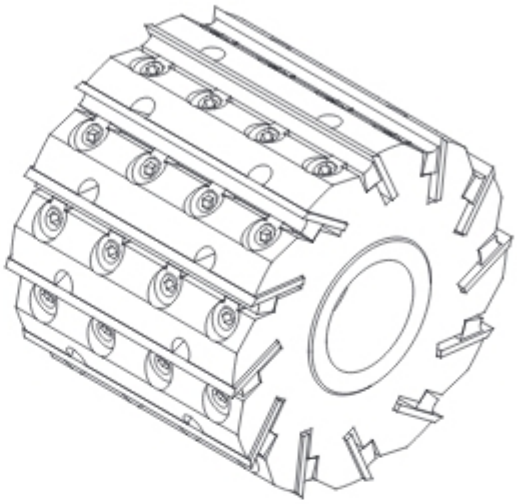

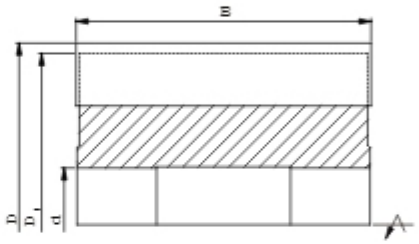

D D_1 n_{max} d_{max} z b (knife)	160 157 6000 60 10 3		180 177 6000 60 12 3		200 197 6000 60 16 3	
B mm	ST	AL	ST	AL	ST	AL
100	+	+	+	+	+	+
160	+	+	+	+	+	+
230	+	+	+	+	+	+

Spare parts for cutter heads 1100-5

Cat. nr	Name	Dimensions			Cat. nr	Name	Dimensions		
	Knife	B x 30 x 3		+	WHAS00046	Screw	M10 P/L x 22		•
	Clamping wedge	B-3 x 24 x 11		+	WHAI01398	Nut	Ø15 x 15,5 x 13		•

Please, give knives type with the order - catalogue page 8.6 - 8.7.

G103

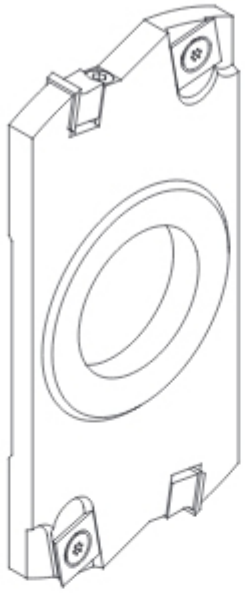

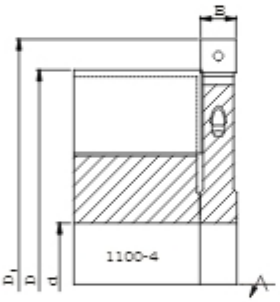

Inserted cutter head, type **G103** with two cutting teeth and two left or two right spurs (z=2 v2), designed for professional machining of solid wood. The cutter head is used for edge formatting. Special body design enables the head to work together with planer heads type 1100-4. The body is made from steel or aluminum.

Type of work: edge formatting.

Material: solid hard wood, solid soft wood.

D1 d n z	145 40 9000 2 v2		165 50 6000 2 v2	
B mm	ST	AL	ST	AL
12,2	+	+	+	+
15,2	+	+	+	+

Catalogue number	Type	Body	D1 mm	D mm	B mm	d mm	z		
G103-145-0003L-0	G103	ST	145	125	12,2	40	2 v2	HM	•
G103-165-0003L-0	G103	ST	165	140	12,2	40	2 v2	HM	+
G103-165-0004L-0	G103	ST	165	140	15,2	40	2 v2	HM	+

Spare parts for cutter heads G103

Cat. nr	Name	Dimensions		
	Knife	B-0,4 x 12 x 1,5		+
N0000818	Knife	14 x 14 x 2		•
	Clamping wedge	B-2 x 11,5 x 9		+

Cat. nr	Name	Dimensions		
WHAS00007	Screw TOR 1262	M5x23		•
WHAS00008	Screw TOR 1064	M5x6,5		•

GP-01

Profile serrated head, type **GP-01** with suitable number of cutting teeth, designed for professional machining of solid wood. The cutter head is used for surface profiling. The adjustment of knives height is made with precise serration. The head GP-01 work with knives with thickness 4, 5, 8 or 10 mm. The body is made from steel or aluminum.

Type of work: profiling.

Material:

HSS solid soft wood

HM solid hard wood

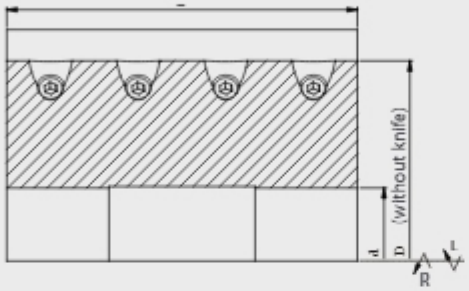

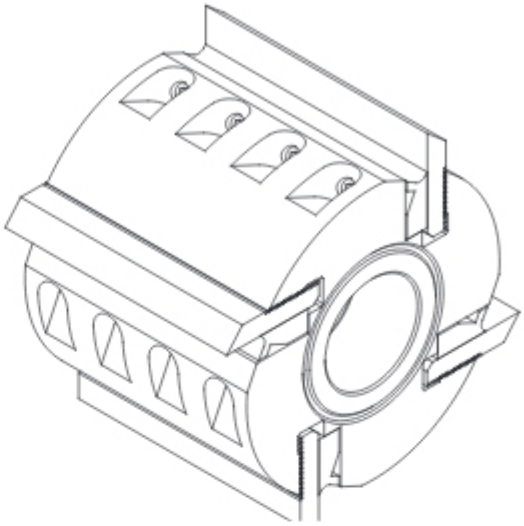

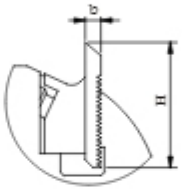





D n max d max z	122 9000 40 2		122 9000 40 4		122 9000 40 6		137 6000 50 2		137 6000 50 4	
B mm	ST	AL	ST	AL	ST	AL	ST	AL	ST	AL
40	+	+	+	+	+	+	+	+	+	+
50	+	+	+	+	+	+	+	+	+	+
60	+	+	+	+	+	+	+	+	+	+
80	+	+	+	+	+	+	+	+	+	+
100	+	+	+	+	+	+	+	+	+	+
120	+	+	+	+	+	+	+	+	+	+
150	+	+	+	+	+	+	+	+	+	+
160	+	+	+	+	+	+	+	+	+	+
180	+	+	+	+	+	+	+	+	+	+
200	+	+	+	+	+	+	+	+	+	+

Catalogue number (without knives)	Type	Body	D mm	B mm	d mm	z	
GP01-122-4044-A	GP-01	ST	122	40	40	4	•
GP01-122-4064-A	GP-01	ST	122	60	40	4	•
GP01-122-4084-A	GP-01	ST	122	80	40	4	•
GP01-122-4104-A	GP-01	ST	122	100	40	4	•
GP01-122-4154-A	GP-01	ST	122	150	40	4	•

Spare parts for cutter heads GP-01

Cat. nr	Name	Dimensions		
	Knife	B x 50 x b		+
	Clamping wedge	B x 25,5 x 13		+

Cat. nr	Name	Dimensions		
WHAW00007	Screw DIN 915	M10x20		•

Please, give type and thickness of cutting knives with the order. Knives can be found on page 8.4 (HSS knives) and 8.5 (knives with HM insret) of the catalogue.

Hydro cutter heads



Hydro cutter heads pressure filling systems

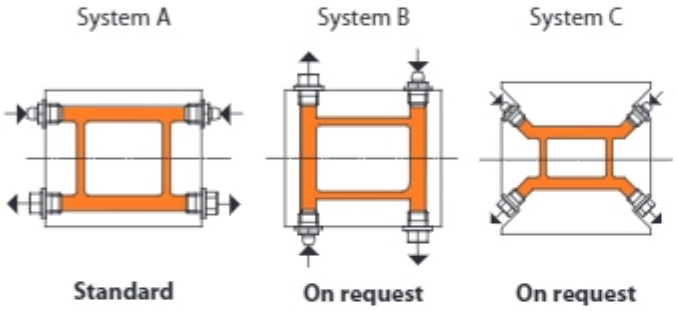

Construction specification of hydro cutter heads		
for		B_1 mm
D < 160	-	B + 15
D ≥ 160	B ≤ 130	
D ≥ 160	B > 130	B

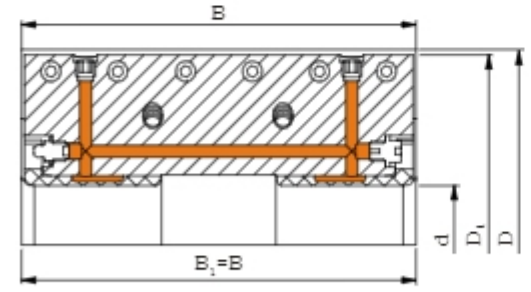

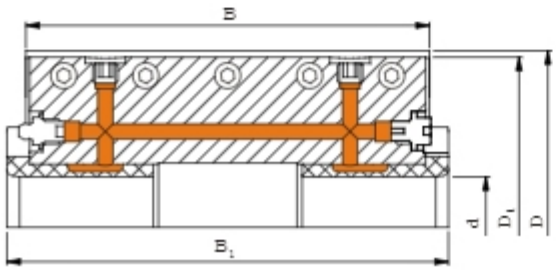

Hydro cutter heads are cutter heads with hydraulic clamping system designed for professional, very precise machining of solid wood. The tools mounted on hydro sleeve have been used for precise cutting of flat surfaces as well as for profiling. The construction of tools with hydro clamping guarantees tolerance of radial run-out reduced to minimum as fitting tolerance after installing the system on the machine spindle (developing pressure 300 bar) equals to zero. This automatically results in very precise positioning of the tool on the machine spindle. The hydro system which also allows for perfect balancing of the tools, apart from very high machined surface quality, enables working with high cutting and feed speed. Even wear of all the blades guarantees significantly increased life of the tool.

Hydro cutter heads are used for finishing (allowance up to 0,8 mm) and pre-planing (allowance up to 5 mm).
As standard, hydro cutter heads are offered according to pressure filling system type A. On client's request, we offer hydro system according to pressure filling system type B and C.

Hydro cutter heads chapter includes only example positions of straight (1100-4H and 1100-5H) and profile (GP-01H) cutter heads. We offer also spiral cutter heads in hydro version. On request, we can suggest and manufacture a proper cutter head for the required type of work, material, parameters and conditions during machining.
Maximum dimensions of hydro cutter heads:
D_{max}=400mm, B_{max}=400mm

Advantages:

- precise mounting of the tool on the machine spindle,
- narrowed radial run-out tolerance,
- very high quality of machined material surface,
- increased life of the tool,
- perfect balancing of the tool,
- low vibration level,
- quiet and steady running of the tool,
- ability to work with high speed cutting and feed speed up to 200 m/min.

1100-4 H

Hydro-planer head, type **1100-4H** with suitable number of cutting teeth, designed for professional machining of solid wood. The cutter head is used for very precise planing of flat surfaces. The adjusting of knives height is made with springs. The head 1100-4H is adapted to pre-planing materials with allowance up to 5 mm and finish planing materials with allowance up to 0,8 mm. Special geometry, hydro system and very precise balancing of the head allows for higher feed speed, up to 100 m/min and guarantees optimal workload of the machine spindle.

Type of work: pre-planing and precise planing.

Material:
- HSS solid soft wood
- HM solid hard wood

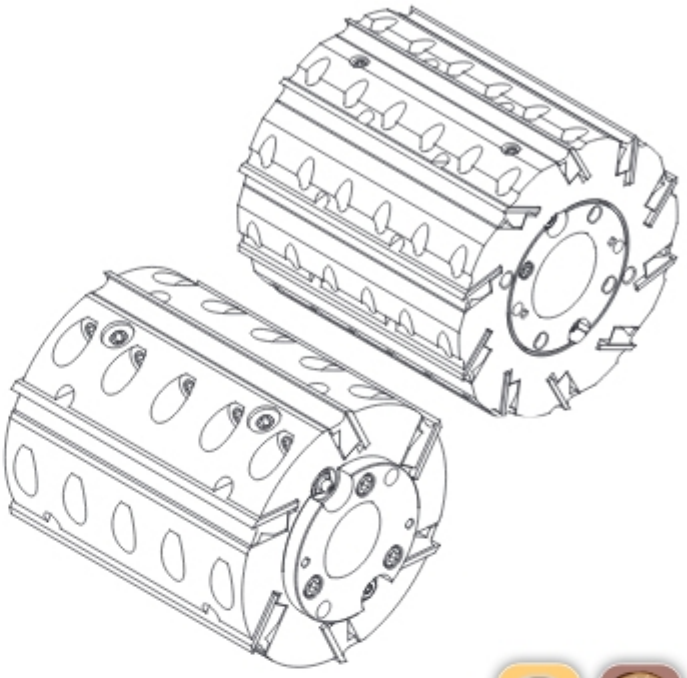

D D_1 n_{max} d_{max} z b (knife)	140/143 135 9000 40 4 3	160/163 155 9000 50 4 3	160/163 155 6000 50 6 3	180/183 175 6000 50 4 3	180/183 175 6000 50 6 3	180/183 175 6000 50 8 3	200/203 195 6000 50 8 3	200/203 195 6000 50 10 3	200/203 195 6000 50 12 3
B mm	ST	ST	ST	ST	ST	ST	ST	ST	ST
60	+	+	+	+	+	+	+	+	+
80	+	+	+	+	+	+	+	+	+
100	+	+	+	+	+	+	+	+	+
130	+	+	+	+	+	+	+	+	+
150	+	+	+	+	+	+	+	+	+
160	+	+	+	+	+	+	+	+	+
180	+	+	+	+	+	+	+	+	+
200	+	+	+	+	+	+	+	+	+
230	+	+	+	+	+	+	+	+	+

Catalogue number (without knives)	Type	Body	D mm	B mm	d mm	z	
A104-155G6136-0	1100-4 H	ST	160	130	50	6	•
A104-155G6156-0	1100-4 H	ST	160	150	50	6	•
A104-155G6166-0	1100-4 H	ST	160	160	50	6	•
A104-155G6168-0	1100-4 H	ST	160	160	50	8	•
A104-155G6236-0	1100-4 H	ST	160	230	50	6	•

Spare parts for cutter heads 1100-4H

Cat. nr	Name	Dimensions	
	Knife	B x 30 x 3	+
	Clamping wedge	B-3 x 24 x 11	+

Cat. nr	Name	Dimensions	
WHAW00012	Screw	M10 x 1 x 20	•

Please, give type of knives with the order - catalogue page 8.7.

Spindle lock protecting on page 9.25.

1100-5 H

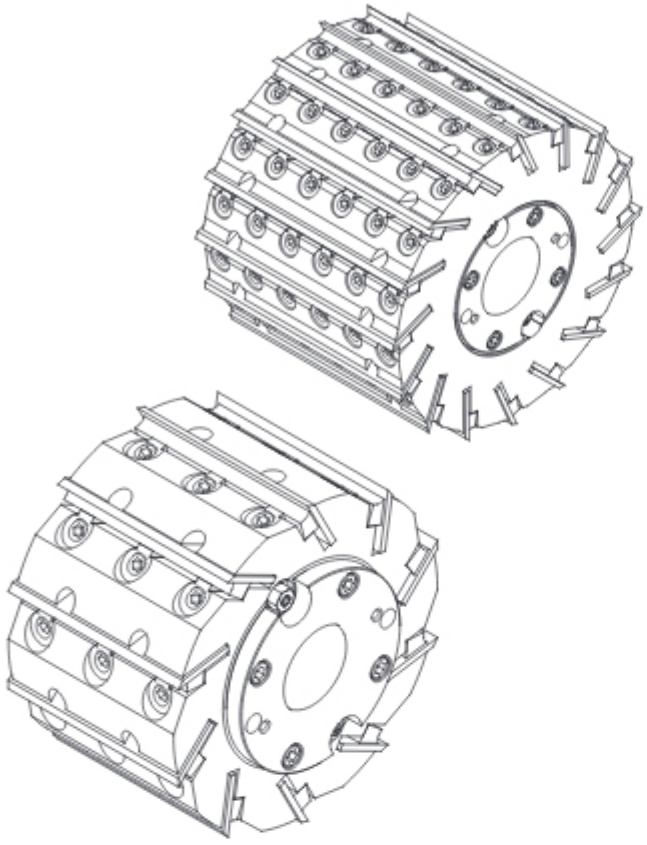

Multi-teeth hydro-planer head, type **1100-5H** with suitable number of cutting teeth, designed for professional machining of solid wood. The cutter head is used for very precise planing of flat surfaces. The adjustment of knives height is made with springs. Increased number of cutting teeth, hydro system and very precise balancing of head allows for higher feed speed, within the range 80-200 m/min and guarantees optimal workload of the machine spindle. The head 1100-5H is adapted to pre-planing materials with allowance up to 5 mm and planing materials with allowance up to 0,8 mm.

Type of work: pre-planing and precise planing.

Material:

HSS solid soft wood

HM solid hard wood

D D_1 n_{max} d_{max} z b (knife)	160/163 155 6000 50 10 3	180/183 175 6000 50 12 3	200/203 195 6000 50 16 3
B mm	ST	ST	ST
100	+	+	+
160	+	+	+
230	+	+	+

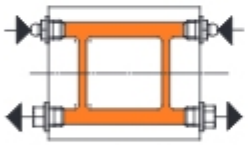

1100-5H are offered with standard pressure filling system type A only.

Catalogue number (without knives)	Type	Body	D mm	B mm	d mm	z	
A105-155G4101-0	1100-5 H	ST	160	100	40	10	+
A105-155G6231-0	1100-5 H	ST	160	230	50	10	+
A105-195G6169-0	1100-5 H	ST	200	160	50	16	+

Spare parts for cutter heads 1100-5H

Cat. nr	Name	Dimensions		
	Knife	B x 30 x 3		+
	Clamping wedge	B-3 x 24 x 11		+

Cat. nr	Name	Dimensions		
WHAS00046	Screw	M10 P/L x 22		•
WHAI01398	Nut	Ø15 x 15,5 x 13		•

Please, give type of knives with the order - catalogue page 8.7.

Spindle lock protecting on page 9.25.

GP-01 H

Hydro-serrated head, type **GP-01H** with suitable number of cutting teeth, designed for professional machining of solid wood. The cutter head is used for very precise profiling of flat surfaces. The adjustment of knives height is made with precise serration. The head GP-01 works with the knives with thickness 4, 5, 8 or 10 mm. Special geometry, hydro system and very precise balancing of the head allow for higher feed speed and guarantee optimal workload of the machine spindle.

Type of work: profiling.

Material:
- HSS solid soft wood
- HM solid hard wood

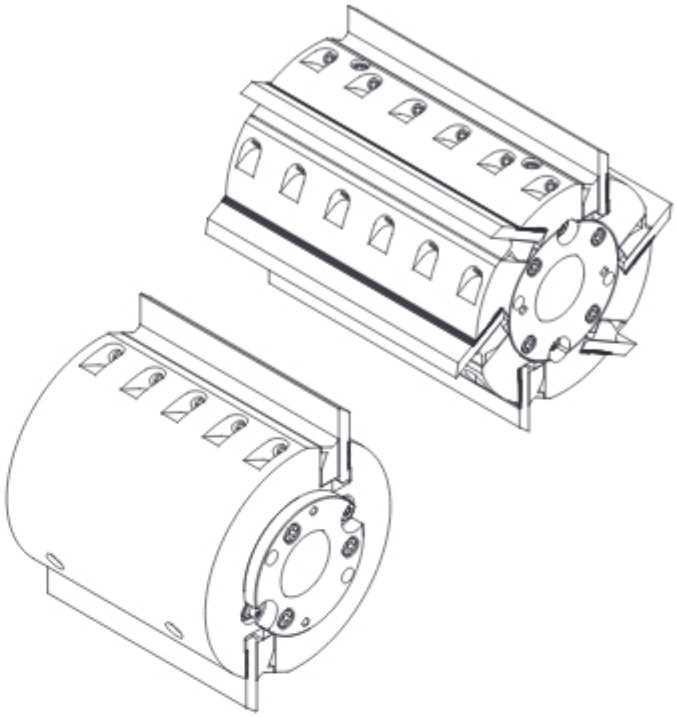

D n d z	150 6000 50 4	150 6000 50 6	150 6000 50 8	160 6000 50 4	160 6000 50 6	160 6000 50 8	180 6000 50 8
B mm	ST	ST	ST	ST	ST	ST	ST
60	+	+	+	+	+	+	+
80	+	+	+	+	+	+	+
100	+	+	+	+	+	+	+
150	+	+	+	+	+	+	+
160	+	+	+	+	+	+	+
200	+	+	+	+	+	+	+
230	+	+	+	+	+	+	+

Catalogue number (without knives)	Type	Body	D mm	B mm	d mm	z	
GP01-160G6066-A	GP-01 H	ST	160	60	50	6	•
GP01-160G6088-A	GP-01 H	ST	160	80	50	8	•
GP01-160G6106-A	GP-01 H	ST	160	100	50	6	+
GP01-160G6158-A	GP-01 H	ST	160	150	50	8	+

Spare parts for cutter heads GP-01 H

Cat. nr	Name	Dimensions	
	Knife	B x 50 x 8	+
	Clamping wedge	B x 25,5 x 13	+

Cat. nr	Name	Dimensions	
WHAW00012	Screw DIN 915	M10 x 1 x 20	•

Please, give type and thickness of cutting knives with the order. Knives can be found on page 8.4 (HSS knives) and 8.5 (knives with HM insret) of the catalogue.

Spindle lock protecting on page 9.25.

GP-03F H

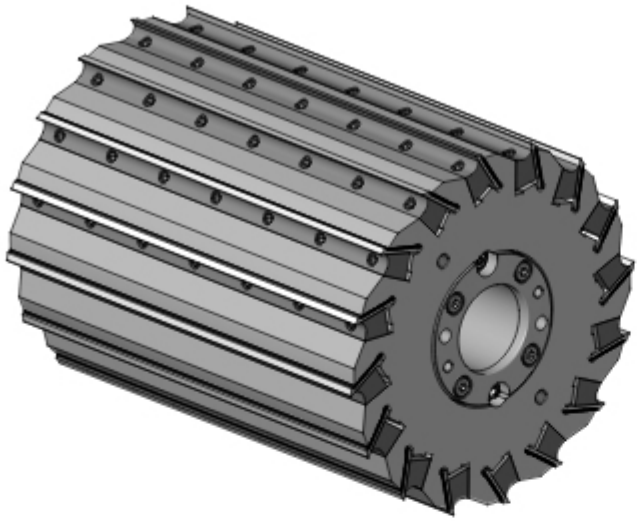

Hydro-serrated head, type **GP-03H** with suitable number of cutting teeth, designed for professional machining of solid wood. The cutter head is used for very precise profiling of flat surfaces. The adjustment of knives height is made with precise serration. The head GP-01 works with the knives with thickness 4, 5, 8 or 10 mm. Special geometry, hydro system and very precise balancing of the head allow for higher feed speed and guarantee optimal workload of the machine spindle.

Type of work: pre-planing and precise planing.

Material:
- HSS solid soft wood
- HM solid hard wood

D D_ n d z	180/183 175 6000 50 10	200/203 195 6000 50 12	227/230 222 6000 60 14
B mm	ST	ST	ST
60	+	+	+
80	+	+	+
100	+	+	+
150	+	+	+
160	+	+	+
200	+	+	+
235	+	+	+

Catalogue number (without knives)	Type	Body	D mm	B mm	d mm	z	Hydro system	
GP03-175G62001-A	GP-03 H	ST	180/183	200	50	10	A	+
GP03-195G61505-A	GP-03 H	ST	200/203	150	50	12	A	+
GP03-242G83309-C	GP-03 H	ST	247/250	330	60	16	C	+

Spare parts for cutter heads GP-03 H

Cat. nr	Name	Dimensions	
	Knife	B x 35 x 4	+
	Clamping wedge	B x 18,6 x 21	+

Cat. nr	Name	Dimensions	
WHAW00007	-	M10x20	•

1100-4 L

Planer head with HSK-85WS clamping, type **1100-4 L** with suitable number of cutting teeth, used for professional machining of solid wood. The cutter head is designed for very precise planing of flat surfaces. The adjustment of knives height is made with springs. Precise HSK 85 WS clamping and very precise balancing of head allows for higher feed speed and higher rotation speed, up to 12 000 rpm.

Type of work: pre-planing and precise planing.

Material:
HSS solid soft wood
HM solid hard wood

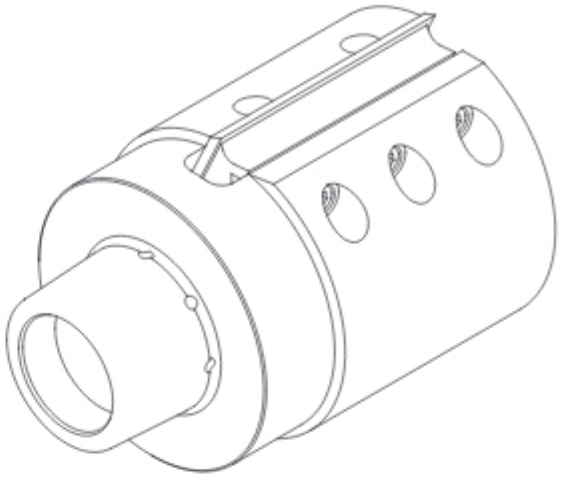

D z	95 2	95 4	125 2	125 4
B mm	ST	ST	ST	ST
60	+	+	+	+
80	+	+	+	+
100	+	+	+	+
130	+	+	+	+
150	+	+	+	+
180	+	+	+	+
200	+	+	+	+
230	+	+	+	+

B<100 mm

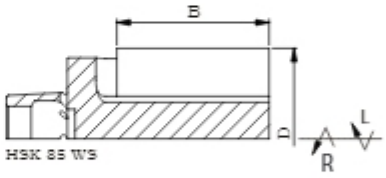

B≥100 mm

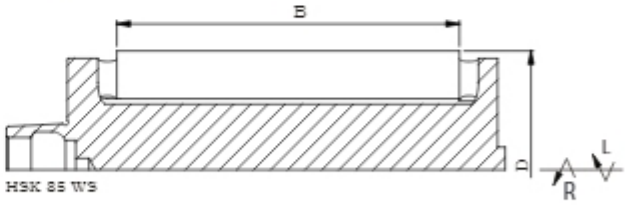

Spare parts for cutter heads 1100-4

Cat. nr	Name	Dimensions		
	Knife	B x 30 x 3		+
	Clamping wedge	B-3 x 24 x 11		+

Cat. nr	Name	Dimensions		
WHAW00012	Screw	M10 x 1 x 20		•

Please, give type of knives with the order - catalogue page 8.7.

GPL-01

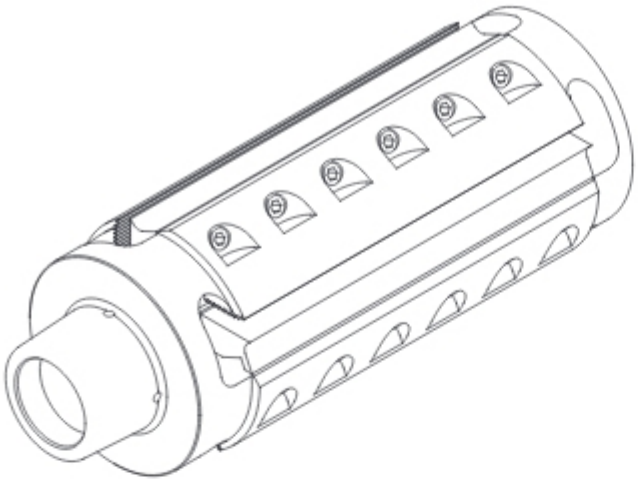

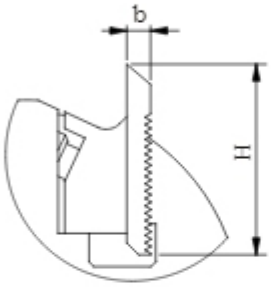

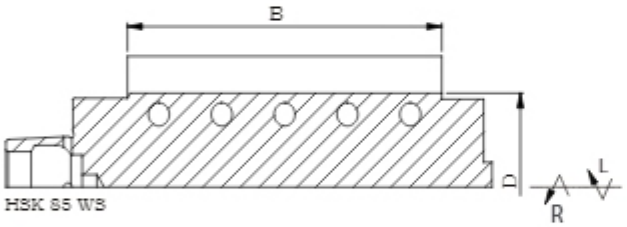

Serrated head with HSK 85 WS clamping, type **GPL-01** with suitable number of cutting teeth, designed for professional machining of solid wood. The cutter head is used for very precise profiling. The adjustment of knives height is made with precise serration. The head GP-01 works with knives with thickness 8 or 10 mm. Precise HSK 85 WS clamping increased accuracy of rotation movement and very precise balancing of the head allows for higher feed speed and higher rotation speed, up to 12 000 rpm.

Type of work: precise profiling.

Material:

HSS solid soft wood

HM solid hard wood

D z	90 2	90 4
B mm	ST	ST
60	+	+
80	+	+
100	+	+
130	+	+
150	+	+
180	+	+
200	+	+
230	+	+





Catalogue number (without knives) right	 left	Typ	D mm	B mm		z	
GPL01-090-064P-B	GPL01-090-064L-B	GPL-01	90	60	HSK 85	4	+
GPL01-090-084P-B	GPL01-090-084L-B	GPL-01	90	80	HSK 85	4	+
GPL01-090-104P-B	GPL01-090-104L-B	GPL-01	90	100	HSK 85	4	+
GPL01-090-134P-B	GPL01-090-134L-B	GPL-01	90	130	HSK 85	4	+
GPL01-090-154P-B	GPL01-090-154L-B	GPL-01	90	150	HSK 85	4	+
GPL01-090-184P-B	GPL01-090-184L-B	GPL-01	90	180	HSK 85	4	+
GPL01-090-234P-B	GPL01-090-234L-B	GPL-01	90	230	HSK 85	4	+

Spare parts for cutter heads GPL-01

Cat. nr	Name	Dimensions		
	Knife	B x 50 x 8		+
	Clamping wedge	B x 25,5 x 13		+

Cat. nr	Name	Dimensions		
WHAW00012	Screw DIN 915	M10 x 1 x 20		•

Please, give type and thickness of cutting knives with the order. Knives can be found on page 8.4 (HSS knives) and 8.5 (knives with HM insret) of the catalogue.

GPL-03

Serrated head with HSK 85 WS clamping, type **GPL-03** with suitable number of cutting teeth, designed for professional machining of solid wood. The cutter head is used for very precise surface profiling. The adjustment of knives height is made with precise serration. The head GP-01 works with knives with thickness 5 mm. Precise HSK 85 WS clamping and very precise balancing of the head allows for higher feed speed and higher rotation speed, up to 12 000 rpm.

Type of work: precise profiling.

Material:
- HSS solid soft wood
- HM solid hard wood

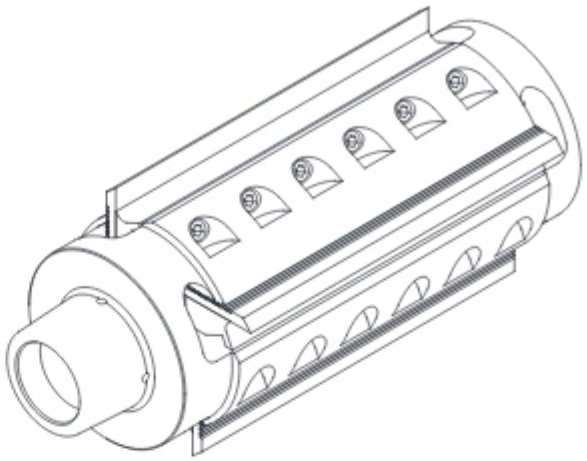

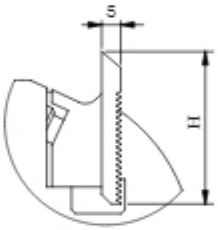

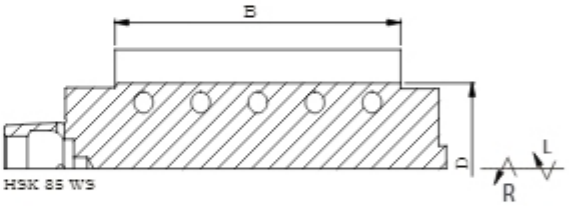

D z	90 2	90 4
B mm		
60	+	+
80	+	+
130	+	+
170	+	+
230	+	+
240	+	+





Catalogue number (without knives) right	left	Type	D mm	B mm		z	
GPL03-090-064P-A	GPL03-090-064L-A	GPL-03	90	60	HSK 85	4	+
GPL03-090-084P-B	GPL03-090-084L-B	GPL-03	90	80	HSK 85	4	+
GPL03-090-134P-B	GPL03-090-134L-B	GPL-03	90	130	HSK 85	4	+
GPL03-090-174P-B	GPL03-090-174L-B	GPL-03	90	170	HSK 85	4	+
GPL03-090-234P-B	GPL03-090-234L-B	GPL-03	90	230	HSK 85	4	+
GPL03-090-244P-B	GPL03-090-244L-B	GPL-03	90	240	HSK 85	4	+

Spare parts for cutter heads GPL-03

Cat. nr	Name	Dimensions		
	Knife	B x 40 x 5		+
	Clamping wedge	B x25,5x13		+

Cat. nr	Name	Dimensions		
WHAW00012	Screw	M10 x 1 x 20		•

Please, give type and thickness of cutting knives with the order. Knives can be found on page 8.4 (HSS knives) and 8.5 (knives with HM insret) of the catalogue.

GPU-01

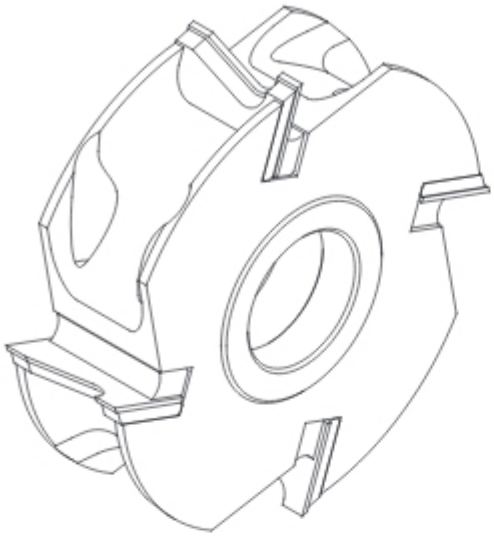

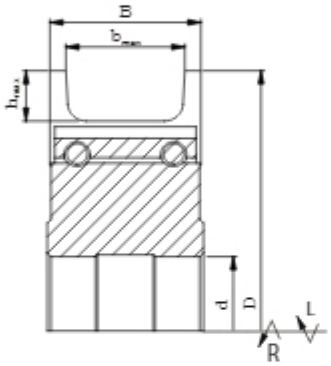

Universal profile inserted head, type **GPU-01** with suitable number of cutting teeth, designed for professional machining of wood and wood-based materials such as chipboard, MDF and others. The cutter head is used for profiling. The profiles are manufactured according to individual customer request and their dimensions have to be adapted to the sizes of insert, which are shown on the drawing below. Design of universal head, except profile knives, contains also support-inserts with shape adapted to the profile knives. The body is made from steel or aluminum.

Type of work: profiling.

Material: solid hard wood, chipboard, MDF.

Maximum dimensions of blades profile for width 60 mm and 40 mm.

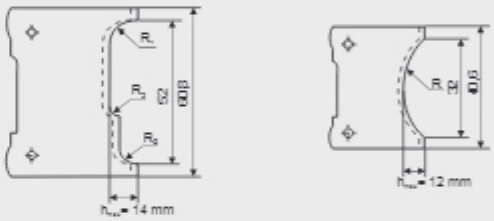





D n d b z	125 9000 40 32-52 2-6		150 9000 60 32-52 2-6		180 6000 60 32-52 4		200 6000 60 32-52 4	
B mm	ST	AL	ST	AL	ST	AL	ST	AL
40	+	+	+	+	+	+	+	+
60	+	+	+	+	+	+	+	+

Catalogue number (without inserts)	Type	Body	D mm	B mm	b mm	d mm	z		
GU01-125-4404P-0	GPU-01	ST	125	40	32	40	4	HM	+
GU01-125-4604P-0	GPU-01	ST	125	60	52	40	4	HM	+
GU01-140-4404P-0	GPU-01	ST	140	40	32	40	4	HM	+
GU01-180-4404P-0	GPU-01	ST	180	40	32	40	4	HM	+
GU01-180-4604P-0	GPU-01	ST	180	60	52	40	4	HM	+

Spare parts for cutter heads GPU-01, B=60

Cat. nr	Name	Dimensions		
	Knife	B x 30 x 1,5		+
	Clamping wedge	B-2x12x8		+

Cat. nr	Name	Dimensions		
	Support insert	60,8 x 28 x 4		+
WHAW00005	Screw DIN 915	M8x16		•

GPU-02

Universal profile inserted head, type **GPU-02** with two, three or four cutting teeth, designed for professional machining of wood and wood-based materials such as chipboard, MDF and others. The cutter head is used for profiling. The profiles are manufactured according to individual customer request and their dimensions have to be adapted to the sizes of insert, which are shown on the drawing below. Design of universal head, except profile knives, contains also support-inserts with shape adapted to the profile knives. The body is made from steel or aluminum.

Type of work: profiling.

Material: solid hard wood, glued wood, chipboard, MDF.

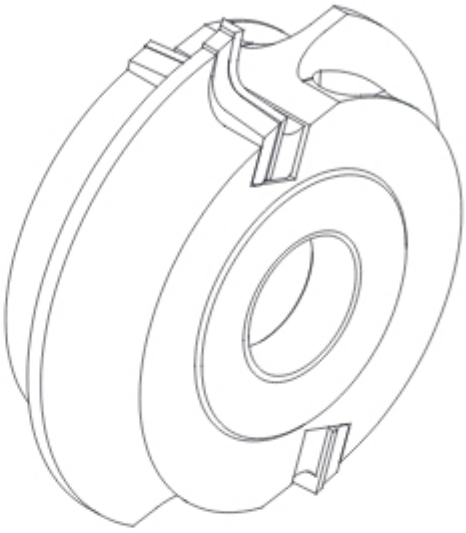

D n d z	125 9000 35 2		150 9000 60 3		180 6000 60 3		200 6000 60 4	
B mm	ST	AL	ST	AL	ST	AL	ST	AL
40	+	+	+	+	+	+	+	+
60	+	+	+	+	+	+	+	+

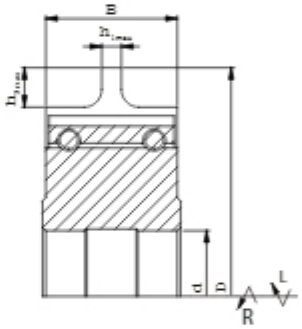

Maximum dimensions of blades profile for width 60 mm and 40 mm.

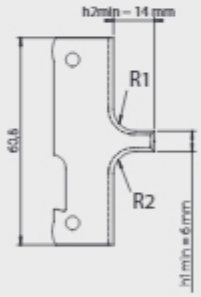

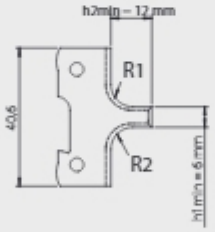

Catalogue number (without inserts)	Type	Body	D mm	B mm	d mm	z		
GU02-125-3402P-0	GPU-02	ST	125	40	35	2	HM	+
GU02-150-2403P-0	GPU-02	ST	150	40	30	3	HM	+

Spare parts for cutter heads GPU-02

Cat. nr	Name	Dimensions		
	Knife	Bx27,5x1,5		+
	Clamping wedge	B-2x12x8		+

Cat. nr	Name	Dimensions		
WHAW00004	Screw DIN 915	M6x16		•

GPF-01

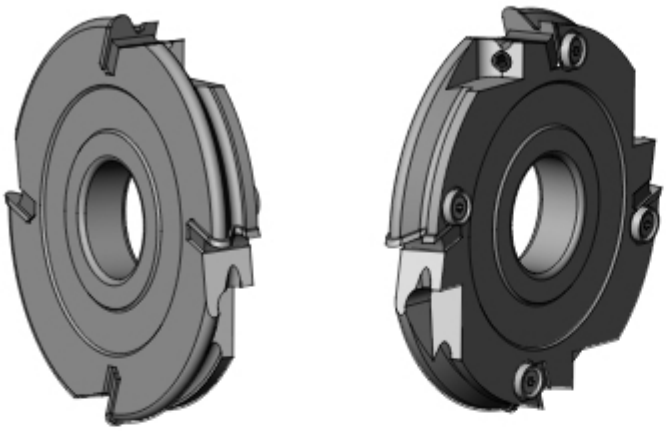

Profile inserted head, type **GPF-01**, with three or four exchangeable HM knives. The cutter head is used for cutting solid wood and wood-based materials such as chipboard, MDF and others. The cutter head GPF-01 is designed with an axial angle of 5 degrees for precise profilling of kitchen front handle.

Body made from steel. Aluminum body available on request.

Type of work: profiling according to drawing.

Material: solid hard wood, chipboard, MDF.





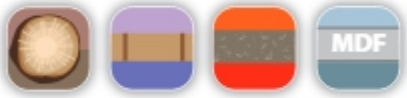



Catalogue number (without inserts)	Type	Body	D mm	B mm	d mm	z	n_{max}		
G56-0368P-0	G-56	ST	125	19,5	30	3.1	9000	HM	+
G56-0369P-0	G-56	ST	125	19,5	30	4.1	9000	HM	+
G56-0367P-0	G-56	ST	140	19,5	40	3.1	6000	HM	+
G56-0366P-0	G-56	ST	140	19,5	40	4.1	6000	HM	+

Spare parts for cutter heads G-56

Cat. nr	Name	Dimensions	Quantity		
N0034075	Knife	20x20x2	3/4 pcs.		+
WHAKA0203	Clamping wedge	18x11,5x5,5	3/4 pcs.		+
WHAS00015	Screw TOR 1065	M5x10	3/4 pcs.		•

Cat. nr	Name	Dimensions	Quantity		
WHAW00005	Clamp screw	M8 x 16	3/4 pcs.		•
WHAT00044	Locating sleeve	Ø12x3,6/6,5	3/4 pcs.		•

GFP-06

Set of adjustable inserted heads, type **GFP-06** with suitable number of cutting teeth, designed for professional machining of wood and wood-based materials such as chipboard, MDF and others. The set is used for edge rounding and beveling of the machined elements Increased regulation range. Width is regulated with spacer rings included in the set.

Type of work: edge profiling, rounding, beveling.

Material: solid wood, chipboard, MDF.

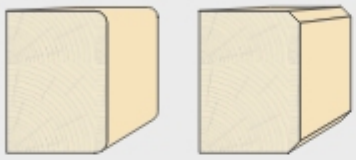

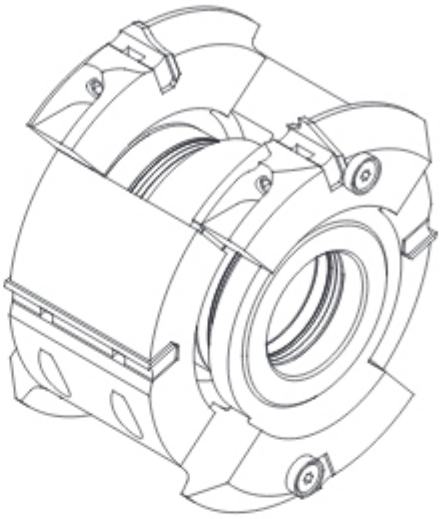

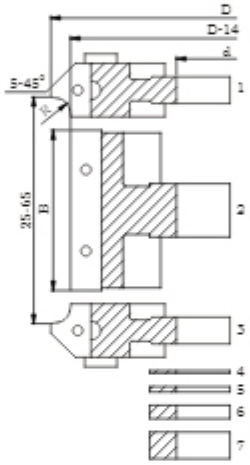

Nr	D mm	B mm	d_{max} mm	Rmm/∢	n_{max}		
1.	134	20	50	5/45°	9000	L	+
2.	120	60	50	5/45°	9000		+
3.	134	20	50	5/45°	9000	R	+
4.	70	1	50	Distance ring 1 pc.			+
5.	70	2	50	Distance ring 2 pcs.			+
6.	70	5	50	Distance ring 3 pcs.			+
7.	70	10	50	Distance ring 2 pcs.			+





D n_{max} d_{max} z	114 9000 35 2		125 9000 40 2		134 9000 50 2		134 9000 50 3		140 6000 50 4		160 6000 50 3		160 6000 50 4		180 6000 50 4		180 6000 50 6	
B mm	ST	AL	ST	AL	ST	AL	ST	AL	ST	AL	ST	AL	ST	AL	ST	AL	ST	AL
25-65	+	+	+	+	+	+	+	+	+	+	+	+	+	+	+	+	+	+

Catalogue number	Type	Body	D mm	d mm	R mm/∢	z		
GF06-0263-00	GFP-06	ST	114	35	5/45°	2	HM	+
GF06-0006-00	GFP-06	ST	134	35	5/45°	2	HM	+
GF06-0003-00	GFP-06	ST	134	40	5/45°	2	HM	+

Spare parts for set of cutter heads GFP-06

Cat. nr	Name	Dimensions		
N0000811	Stright knife	60x12x1,5		•
N0000902 N0000903	Profile knife P/L	20x20x2		+
WHAT00358	Weating sleeve	12x6,5x2,5		+

Cat. nr	Name	Dimensions		
WHAS00006	Screw TOR 1128	M6x10		•
WHAS00011	Screw TOR 1011	M7x20		•
WHAW00004	Push screw	M6x16		•


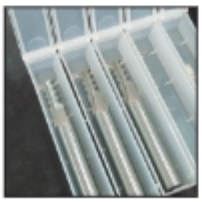


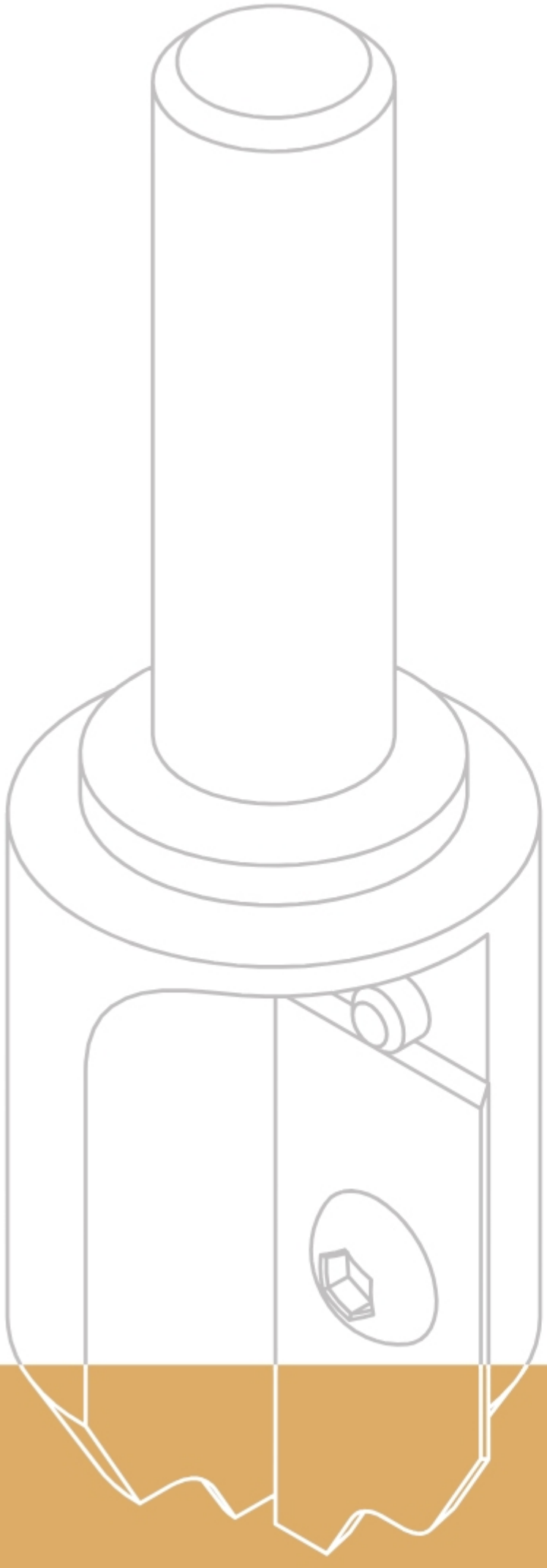







6. Shank tools

Shank tools

Shank tools offered as cutters with brazed HSS or HM tips, cutter heads with exchangeable inserts and spiral monolithic cutters. Shank cutters with tips from high speed steel (HSS) designed for professional machining of solid soft wood and with carbide (HM) tips designed for professional machining of solid soft and hard wood, glued wood and other wood-based materials. They are used for through and dowel drilling, grooving, rebating, edge profiling and nesting.

Shank cutters and cutter heads are made from the highest quality high speed cutting steel in special heat treatment technology, which has been properly selected for the type of work, parameters and conditions prevailing during the machining, in order to guarantee proper work of the tool, both in standard and extreme conditions. Monolithic spiral cutters are made entirely from carbide in advanced profile sharpening technology.

The tools are designed and produced with or without shear angle and optimized chip flow as well as geometry guaranteeing chip flow up or down, depending on needs, in case of monolithic shank cutters. Very precise balancing of the tools allows for working with rotation speed up to 24 000 r.p.m. All shank tools are designed mostly for CNC machines.

All types of cutters and cutter heads are manufactured on modern CNC machines of world-renowned producers, which guarantee high accuracy and precision of the produced tools. The construction and production remains in accordance with all points of safety standard EN/PN-847-1 concerning tools for mechanical woodworking.

The *Shank tools* chapter includes only example types of cutters and cutter heads and sets of cutter heads with basic dimensions. On request, we can suggest, design and manufacture a proper tool for the required type of work, material, parameters and conditions during machining. The production time of catalogue cutters or sets indicated with "+" as well as special tools made on client's request, in most cases does not take more than 10-15 working days.

Orders should include:

- outer diameter (D) or diameters range,
- shank diameter (d),
- shank length (s),
- number of teeth (z) or spindle rotation speed and feed speed,
- type of machined material,
- profile drawing with dimensions or profile sample,
- other information relevant for designing and production process.



Contents

6. SHANK TOOLS

Pictograms 6.4

Shank tools coding system 6.5

Rotation direction 6.5

Basic machining parameters 6.5

6.1 Cutters with brazed tip 6.6

6.2 Cutter heads with exchangeable inserts 6.8

6.3 Sets of profile cutter heads 6.19

6.4 Spiral monolithic cutters 6.21

Pictograms


solid dry softwood


solid dry hardwood


chipboard


glued wood



MDF



plastics


grooving


edge machining


profiling


rebating


finishing

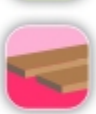
formatting


engraving


through drilling


dowel drilling


step drilling


counterboring


chip breaking


mechanical feed


manual feed



high-speed cutting steel



carbide



carbide monolith



CNC

6

- available / stock product
+ production time 10–15 working days.

Minimum order for shank cutters and cutter heads - 1 pc.
Minimum order for THM - 3 pcs.

Shank tools coding system

Type	Shank part diameter			Total lenght - L	Tooth type 0-straight 1-with shear angle 2-with alternate shear angle			
FTS-07.01	60	/ 20	x	50	120	. 2	. 0	HM
	Diameter			Working part lenght - h	Number of teeth – z 2-two-teeth, z=2 v2 - two-teeth, two spurs			Type of blade HSS - high speed cutting steel HM - carbide

Rotation direction

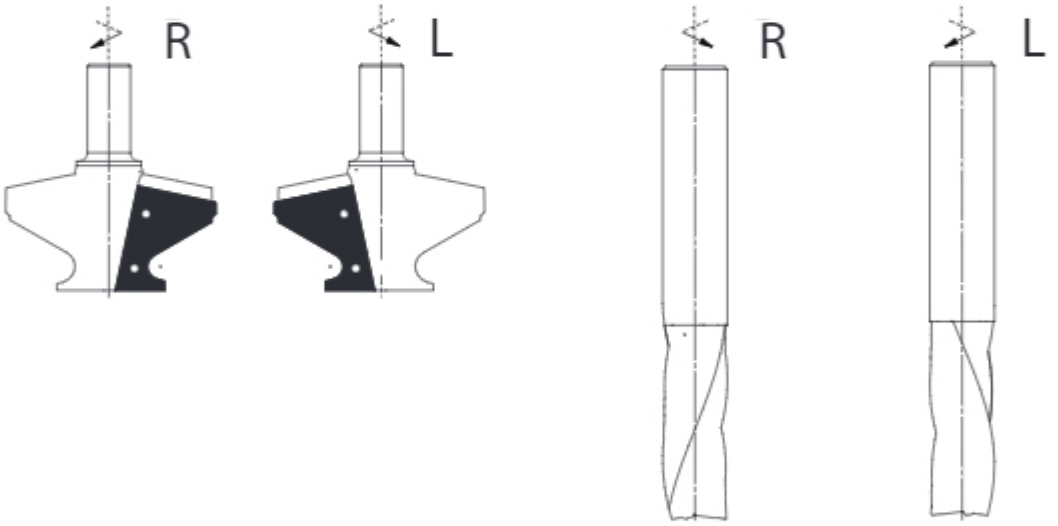

Basic cutting parameters

Cutting speed Vc

$$Vc = \frac{D \times n \times \pi}{60\,000} \text{ [m/s]}$$

D - tool diameter [mm]
n - rotation speed [1/min]
p_z - feed per tooth [mm]
p_{min} - feed per minute [m/min]
z - number of teeth
$\pi = 3,14$

Feed p_{min} / p_z

p_{min} [m/min] ⟷ p_z [mm/tooth]

$$p_{min} = \frac{p_z \times n \times z}{1\,000}$$

$$p_z = \frac{p_{min} \times 1\,000}{n \times z}$$

TW-01-2

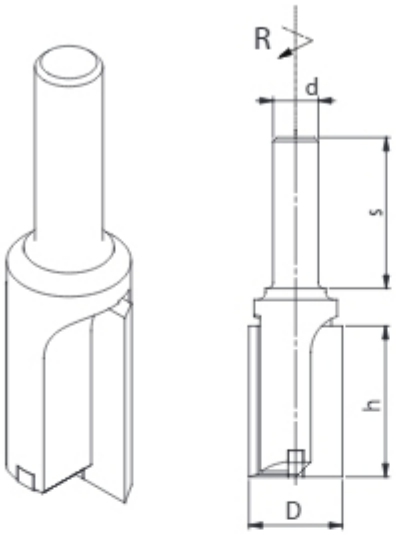

Straight shank cutter, type **TW-01-2** with two cutting teeth, designed for professional machining of solid wood and wood-based materials such as chipboard, MDF and others. The cutter is used for longitudinal cutting – formatting or rebating.

Type of work: formatting, rebating.

Material:
- HSS solid softwood
- HM solid hardwood, glued wood, chipboard, MDF

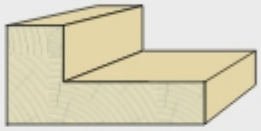





D n d z	12 24000 25 2		14 24000 25 2		16 24000 25 2		18 24000 25 2		20 24000 25 2		25 24000 25 2		30 24000 25 2		40 24000 25 2	
h mm	HSS	HM	HSS	HM	HSS	HM	HSS	HM	HSS	HM	HSS	HM	HSS	HM	HSS	HM
10	+	+	+	+	+	+	+	+	+	+	+	+	+	+	+	+
15	+	+	+	+	+	+	+	+	+	+	+	+	+	+	+	+
20	+	+	+	+	+	+	+	+	+	+	+	+	+	+	+	+
25	+	+	+	+	+	+	+	+	+	+	+	+	+	+	+	+
30	+	+	+	+	+	+	+	+	+	+	+	+	+	+	+	+
40	+	+	+	+	+	+	+	+	+	+	+	+	+	+	+	+
50			+	+	+	+	+	+	+	+	+	+	+	+	+	+
60			+	+	+	+	+	+	+	+	+	+	+	+	+	+

Catalogue number	Type	D mm	dxs mm	h mm	L mm	z			
TW.01-2.18/003	TW-01-2	12	12x30	30	65	2	HM	R	+
TW.01-2.38/001	TW-01-2	14	12x30	30	60	2	HM	R	+
TW.01-2.20/002	TW-01-2	16	12x30	30	65	2	HM	R	+
TW.01-2.45/002	TW-01-2	18	12x30	30	65	2	HM	R	+
TW.01-2.21/001	TW-01-2	20	12x30	30	65	2	HM	R	•
TW.01-2.23/001	TW-01-2	25	12x30	30	65	2	HM	R	+
TW.01-2.02/001	TW-01-2	30	12x30	30	65	2	HM	R	+

TW-07

Profile shank cutter, type **TW-07** with two cutting teeth, designed for professional machining of solid wood and wood-based materials such as chipboard, MDF and others. The cutter is used for surface profiling. Special blade geometry allows for dowel drilling.

Type of work: profiling, dowel drilling.

Material:

- HSS solid softwood
- HM hard wood, glued wood, chipboard, MDF

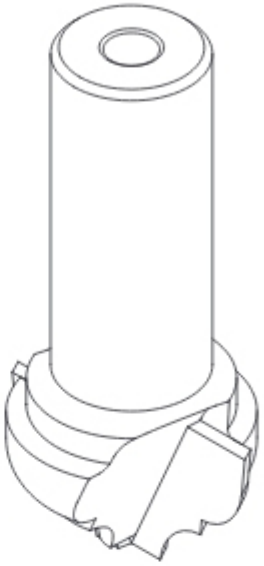

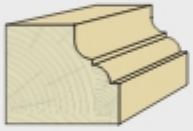

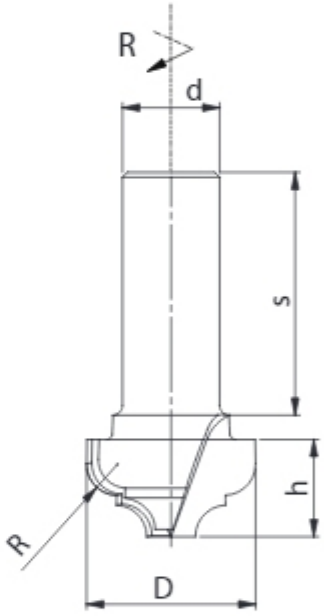

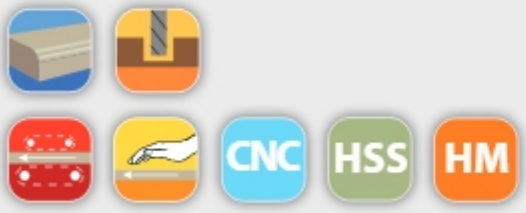



D a d z	35 24000 25 2		40 24000 25 2		55 24000 25 2		70 24000 25 2	
B mm	HSS	HM	HSS	HM	HSS	HM	HSS	HM
20	+	+	+	+	+	+	+	+
25	+	+	+	+	+	+	+	+
30	+	+	+	+	+	+	+	+
35			+	+	+	+	+	+
40					+	+	+	+

Catalogue number	Type	D mm	dxs mm	h mm	L mm	R mm	z			
TW.07.01/001	TW-07	35	10x30	20	55	2x6,5	2	HM	R	+
TW.07.01/002	TW-07	35	12x30	20	55	2x6,5	2	HM	R	+

FTS-01 / 10

Profile shank cutter head, type **FTS-01** or **FTS-10** with suitable number of cutting teeth, designed for professional machining of solid wood and wood-based materials such as chipboard, MDF and others. The cutter head with body working with given blade profile (HM inserts). Cutter heads FTS-01 and FTS-10 are designed and produced only on client's individual request.

FTS-01 R or L



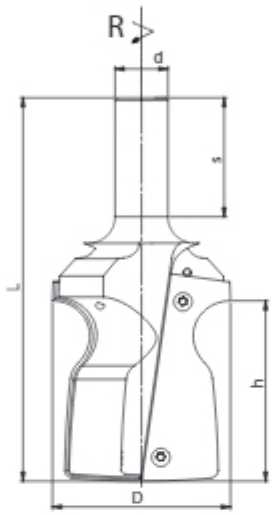

Cutter head **FTS-01** designed for surface profiling. Special blade geometry allows for dowel drilling.

Type of work: profiling, dowel drilling.

Material: solid hardwood, glued wood, chipboard, MDF and others.

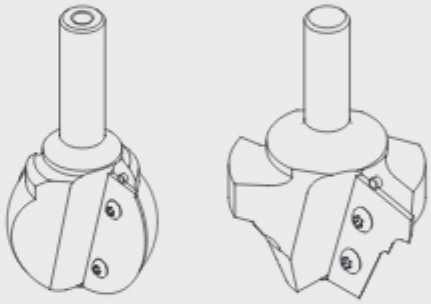



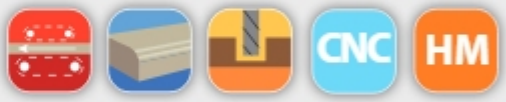

FTS-10 R or L

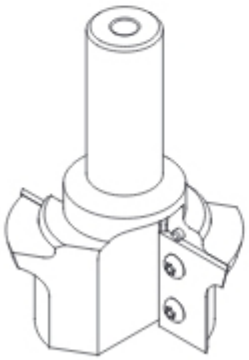

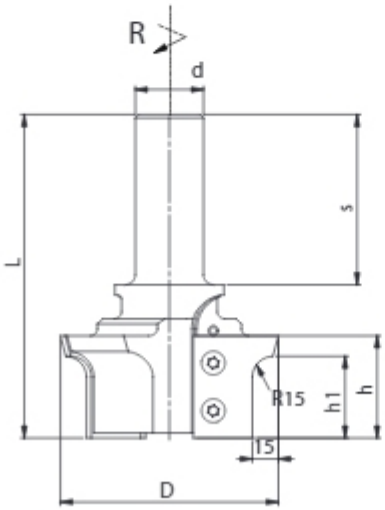

Cutter head **FTS-10** designed for surface profiling without dowel drilling ability.

Type of work: profiling without dowel drilling ability.

Material: solid hardwood, glued wood, chipboard, MDF and others.

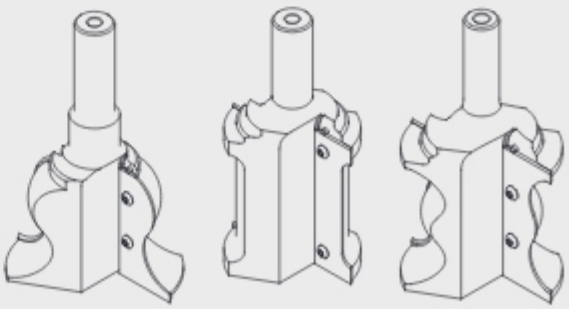





FTS-02 R or L

Profile shank cutter head, type **FTS-02** with one cutting tooth, designed for professional machining of solid wood and wood-based materials such as chipboard, MDF and others. The cutter head with body working with given blade profile (HM inserts) is used for surface profiling. Cutter heads FTS-02 are designed and produced only on client's individual request, within the range of h1=12 mm.

Type of work: profiling, dowel drilling.

Material: solid hardwood, glued wood, chipboard, MDF and others.

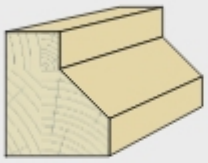

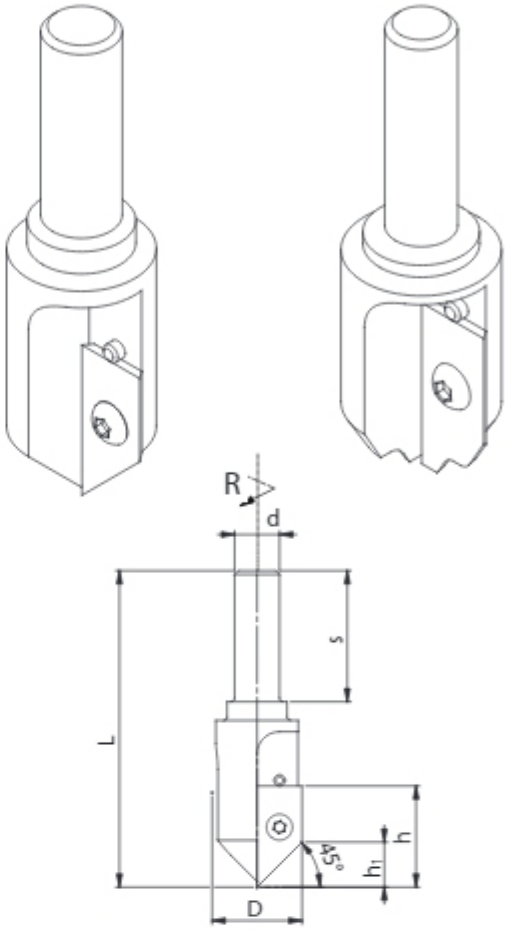

D d z	20 24000 25 1	22 24000 25 1	24 24000 25 1
h mm			
27	+	+	+

Catalogue number	Type	D mm	dxs mm	h mm	h_1 mm	L mm	∢	z			
FTS.02.01/001	FTS-02	24	12	27	12	83	45°	1	HM	R	+
FTS.02.01/002	FTS-02	24	25	27	12	113	45°	1	HM	R	+

Spare parts for cutter heads FTS-02

Cat. nr	Name	Dimensions		
N0000910 N0000911	Knife	27x12x1,5 - P 27x12x1,5 - L		+
	Knife	27x12x1,5		+

Cat. nr	Name	Dimensions		
WHAS00004	Screw STAMPF 94	M4x6		•
WHAI00003	Locating pin	3x6		•

FTS-03 R or L

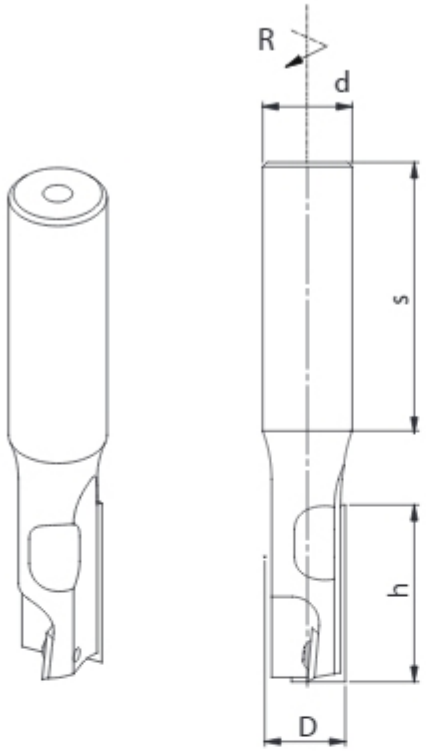

Straight shank cutter head, type **FTS-03** with one cutting tooth and one drilling blade designed for professional machining of solid wood and wood-based materials such as chipboard, MDF and others. The cutter head is used for rebating and grooving with drilling ability.

Type of work: rebating, grooving, drilling, formatting.

Material: solid hardwood, glued wood, chipboard, MDF and others.

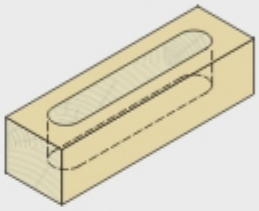





D n d z	18 24000 25 1+1	20 24000 25 1+1	25 24000 25 1+1	30 24000 25 1+1
h mm				
12	+	+	+	+
29,5	+	+	+	+
39,5	+	+	+	+
49,5	+	+	+	+

Catalogue number	Type	D mm	dxs mm	h mm	L mm	z			
FTS.03P1853.01	FTS-03	18	25x60	29,5	106	1+1	HM	R	+
FTS.03P2053.01	FTS-03	20	25x60	29,5	106	1+1	HM	R	+
FTS.03P2553.01	FTS-03	25	25x55	29,5	100	1+1	HM	R	+
FTS.03P3053.01	FTS-03	30	25x56	29,5	100	1+1	HM	R	+

Spare parts for cutter heads FTS-03

Cat. nr	Name	Dimensions	
N0000801	Knife	7,5 x 12 x 1,5 for D=18; 20	•
N0000814	Knife	29,5 x 12 x 1,5	•

Cat. nr	Name	Dimensions	
N0000813	Knife	12 x 12 x 1,5 for D=25; 30	•
WHAS00004	Screw STAMPF 94	M4x6	•

FTS-06 R or L

Straight shank cutter head, type **FTS-06** with two cutting teeth, designed for professional machining of solid wood and wood-based materials such as chipboard, MDF and others. The cutter head is used for rebating and formatting.

Type of work: formatting, rebating.

Material: solid hardwood, glued wood, chipboard, MDF and others.

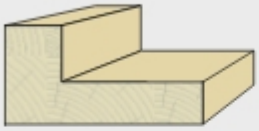

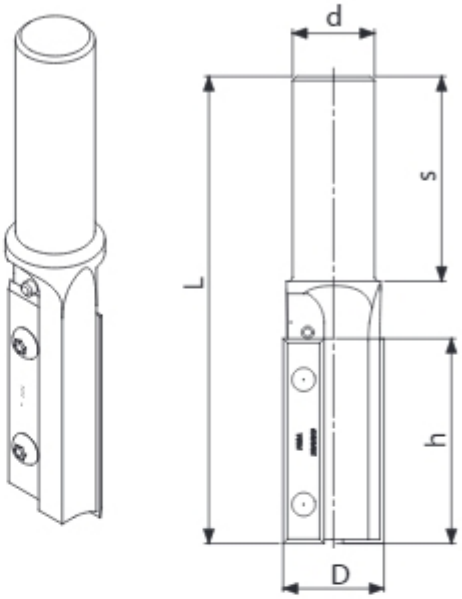

CNC HM MDF

D n d z	18 24000 25 2	20 24000 25 2	25 24000 25 2	27 24000 25 2
h mm				
29,5	+	+	+	+
39,5	+	+	+	+
49,5	+	+	+	+

Catalogue number	Type	D mm	dxs mm	h mm	L mm	z			
FTS.06P1843.01	FTS-06	18	20x45	29,5	95	2	HM	R	+
FTS.06P1845.01	FTS-06	18	20x45	49,5	110	2	HM	R	+
FTS.06P2043.01	FTS-06	20	20x60	29,5	95	2	HM	R	+
FTS.06P2045.01	FTS-06	20	20x60	49,5	125	2	HM	R	•
FTS.06P2253.01	FTS-06	22	25x60	29,5	105	2	HM	R	+
FTS.06P2255.01	FTS-06	22	25x60	49,5	125	2	HM	R	+
FTS.06P2553.01	FTS-06	25	25x55	29,5	105	2	HM	R	+
FTS.06P2555.01	FTS-06	25	25x60	49,5	125	2	HM	R	+
FTS.06P2753.01	FTS-06	27	25x60	29,5	105	2	HM	R	+
FTS.06P2755.01	FTS-06	27	25x60	49,5	125	2	HM	R	+

Spare parts for cutter heads FTS-06

Cat. nr	Name	Dimensions		
N0000814	Knife	29,5 x 12 x 1,5		•
N0000816	Knife	49,5 x 12 x 1,5		•

Cat. nr	Name	Dimensions		
WHAS00004	Screw STAMPF 94	M4x6		•

On request, we offer cutter head FTS-06 with drilling ability (brazed drilling tip).

FTS-07.01 R or L

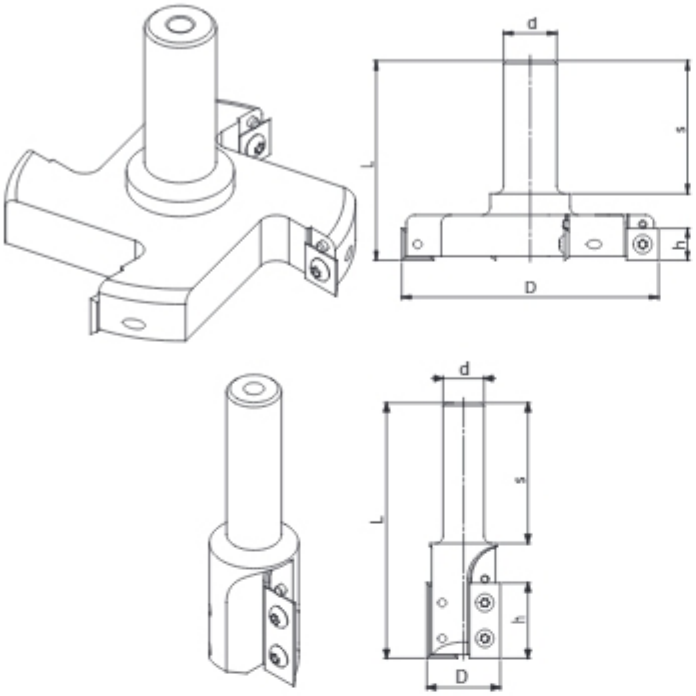

Straight shank cutter head, type **FTS-07.01** with suitable number of cutting teeth, designed for professional machining of solid wood and wood-based materials such as chipboard, MDF and others. The cutter head is used for rebating and formatting.

Type of work: formatting, rebating.

Material: solid hardwood, glued wood, chipboard, MDF and others.

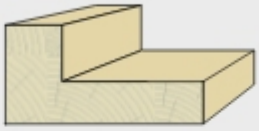



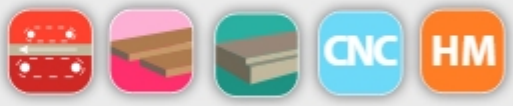

D n d z	30 18000 25 2	35 18000 25 2	40 18000 25 2	45 18000 25 3	50 18000 25 3	60 18000 25 4	70 18000 25 4	80 18000 25 4	90 18000 25 4
h mm									
12	+	+	+	+	+	+	+	+	+
29,5	+	+	+	+	+	+	+	+	+
39,5	+	+	+	+	+	+	+	+	+
49,5	+	+	+	+	+	+	+	+	+
59,5	+	+	+	+	+	+	+	+	+

Catalogue number right	Catalogue number left	Type	D mm	dxs mm	h mm	L mm	z		
FTS.07P3011.01	FTS.07L3011.01	FTS.07.01	30	10x40	12	70	2	HM	+
FTS.07P4053.01	FTS.07L4053.01	FTS.07.01	40	25x60	29,5	105	2	HM	+
FTS.07P5045.01	FTS.07L5045.01	FTS.07.01	50	20x64	49,5	120	2	HM	+
FTS.07P8051.01	FTS.07L8051.01	FTS.07.01	80	25x60	12	85	4	HM	+

Spare parts for cutter heads FTS-07.01

Cat. nr	Name	Dimensions	
	Knife	B x 12 x 1,5	+

Cat. nr	Name	Dimensions	
WHAS00004	Screw STAMPF 94	M4x6	•
WHAI00003	Locating pin	3x6	•

FTS-07.02 R or L

Straight shank cutter head, type **FTS-07.02** with two cutting teeth and two spurs, designed for professional machining of solid wood and wood-based materials such as chipboard, MDF and others. The cutter head is used for precise rebating and formatting.

Type of work: precise formatting, rebating.

Material: solid hardwood, glued wood, chipboard, MDF and others.

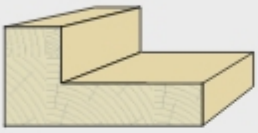

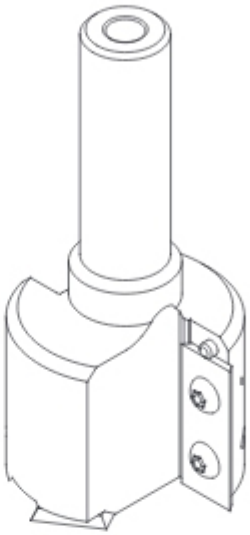

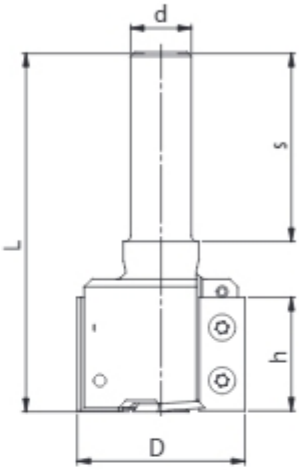

D_{min} = 45 mm

Catalogue number right	Catalogue number left	Type	D mm	dxs mm	h mm	L mm	z		
FTS.07P4533.02	FTS.07L4533.02	FTS.07.02	45	16x60	30	95	2 v2	HM	+
FTS.07P5041.01	FTS.07L5041.01	FTS.07.02	50	20x50	12	80	2 v2	HM	+
FTS.07P6045.01	FTS.07L6045.01	FTS.07.02	60	20x60	50	120	2 v2	HM	+
FTS.07P6046.02	FTS.07L6046.02	FTS.07.02	60	25x55	60	125	2 v2	HM	+

Spare parts for cutter heads FTS-07.02

Cat. nr	Name	Dimensions		
	Knife	B x 12 x 1,5		+
N0000818	Knife	14 x 14 x 2		•

Cat. nr	Name	Dimensions		
WHAS00004	Screw STAMPF 94	M4x6		•
WHAS00008	Screw TOR 1064	M5x6,5		•
WHAI00003	Locating pin	3x6		•

FTS-07.03 R or L

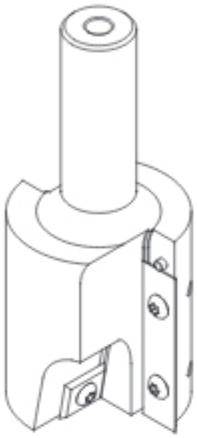

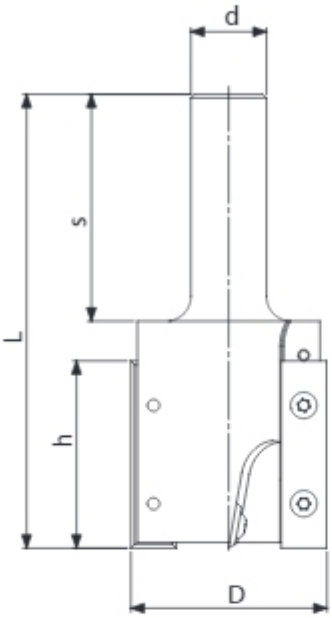

D_{min} = 28 mm

Straight shank cutter head, type **FTS-07.03** with two cutting teeth and one drilling blade, designed for professional machining of solid wood and wood-based materials such as chipboard, MDF and others. The cutter head is used for rebating and grooving with drilling ability.

Type of work: rebating, grooving, drilling, formatting.

Material: solid hardwood, glued wood, chipboard, MDF and others.

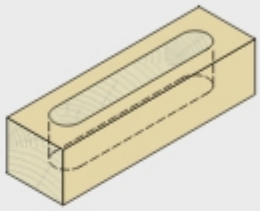



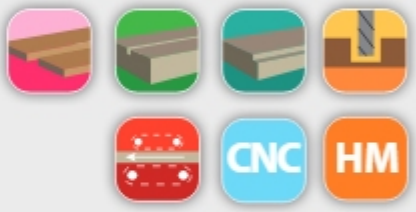

D n d z	28 18000 25 2+1	30 18000 25 2+1	35 18000 25 2+1	40 18000 25 2+1	50 18000 25 2+1
h mm					
12	+	+	+	+	+
29,5	+	+	+	+	+
39,5	+	+	+	+	+
49,5	+	+	+	+	+
59,5	+	+	+	+	+

Catalogue number right	Catalogue number left	Type	D mm	dxs mm	h mm	L mm	z		
FTS.07P2813.01	FTS.07L2813.01	FTS.07.03	28	12x49	29,5	85	2+1	HM	+
FTS.07P3045.01	FTS.07L3045.01	FTS.07.03	30	20x62	49,5	118	2+1	HM	+
FTS.07P3545.01	FTS.07L3545.01	FTS.07.03	35	20x62	49,5	118	2+1	HM	+
FTS.07P4056.02	FTS.07L4056.02	FTS.07.03	40	25x55	59,5	120	2+1	HM	+
FTS.07P4033.02	FTS.07L4033.02	FTS.07.03	40	16x55	29,5	90	2+1	HM	+

Spare parts for cutter heads FTS-07.03

Cat. nr	Name	Dimensions		
N0000813	Knife	12x12x1,5		•
	Knife	B x 12 x 1,5		+

Cat. nr	Name	Dimensions		
WHAS00004	Screw STAMPF 94	M4x6		•
WHAI00003	Locating pin	3x6		•

FTS-11

Universal profile cutter head, type **FTS-11** with two cutting teeth, designed for professional machining of solid wood and wood-based materials such as chipboard, MDF and others. The cutter head used for surface profiling. Insert profile, which shape must remain within dimensions shown in the drawing (h_{max} = 8 mm), is made only according to individual order. The cutter head body is universal, special blade geometry allows for dowel drilling.

Type of work: profiling, dowel drilling.

Material: solid hardwood, glued wood, chipboard, MDF and others.

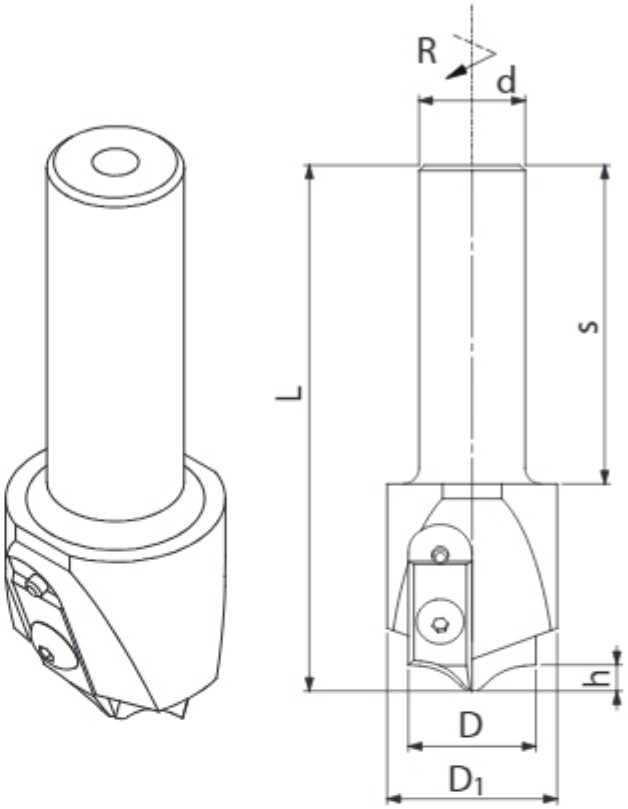



Catalogue number (without knives)	Type	D_1 mm	D mm	dxs mm	h mm	L mm	z			
FTS.11.01.K	FTS-11	32	24	25x40	8	89	2	HM	R	+

Spare parts for cutter heads FTS-11

Cat. nr	Name	Dimensions		
	Knife	Bx12x1,5 P/L		
WHAS00004	Screw STAMPF 94	M4x6		•

Cat. nr	Name	Dimensions		
WHAI00003	Locating pin	3x6		•

FTS-11-B

Universal profile cutter head, type **FTS-11-B** with one cutting tooth, designed for professional machining of solid wood and wood-based materials such as chipboard, MDF and others. The cutter head is used for grooving and edge beveling of the machined elements.

Type of work: grooving, edge beveling, dowel drilling.

Material: solid hardwood, glued wood, chipboard, MDF and others.

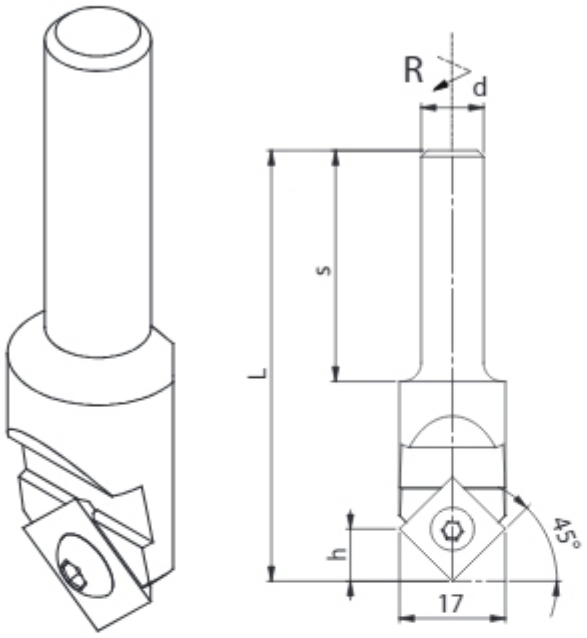



Catalogue number	Type	D mm	dxs mm	h mm	L mm	z			
FTS.11.10.00	FTS-11-B	17	10x20	8	48	1	HM	R	+
FTS.11.08.00	FTS-11-B	17	10x37	8	70	1	HM	R	+
FTS.11.11.00	FTS-11-B	17	12x47	8	80	1	HM	R	+
FTS.11.09.00	FTS-11-B	17	16x47	8	80	1	HM	R	+
FTS.11.12.00	FTS-11-B	17	25x52	8	80	1	HM	R	+
FTS.11.07.00	FTS-11-B	17	12x100	8	133	1	HM	R	+

Spare parts for cutter heads FTS-11-B

Cat. nr	Name	Dimensions	
N0000854	Knife	12 x 12 x 1,5	•

Cat. nr	Name	Dimensions	
WHAS00004	Screw STAMPF 94	M4x6	•

FTS-13 R or L

Universal profile cutter head, type **FTS-13** with two cutting teeth, designed for professional machining of solid wood and wood-based materials such as chipboard, MDF and others. Cutter head with universal body, used for edge rounding with radius from R2 to R5. Parallel cutting blades. Cutter head working with high rotation speed.

Type of work: edge rounding with radius R.

Material: solid hardwood, glued wood, chipboard, MDF and others.

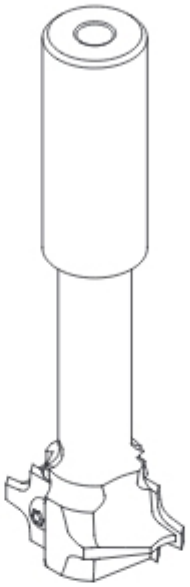

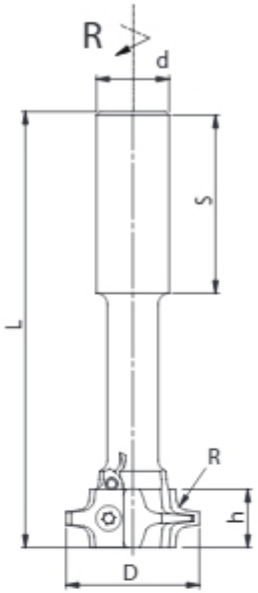

Catalogue number	Type	D mm	dxs mm	h mm	L mm	R mm	z			
FTS.13.18.00	FTS-13	38	16x40	16	90	2	2	HM	R	+
FTS.13.22.00	FTS-13	38	20x50	16	100	3	2	HM	R	+
FTS.13.14.00	FTS-13	38	25x50	16	100	5	2	HM	R	+

Spare parts for cutter heads FTS-13

Cat. nr	Name	Dimensions		
	Profile knife	16x17,5x2 R		+
WHAS00004	Screw STAMPF 94	M4x6		•

Cat. nr	Name	Dimensions		
WHAI00003	Locating pin	3x6		•

GTS-01 R or L
GTS-02 R or L

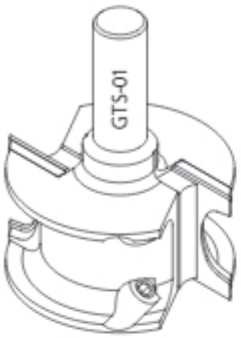

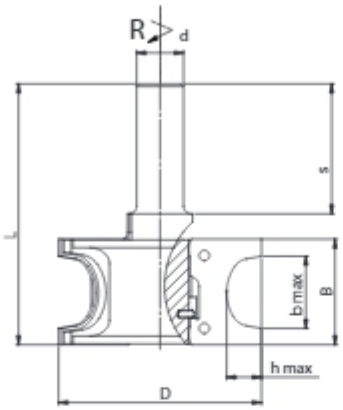

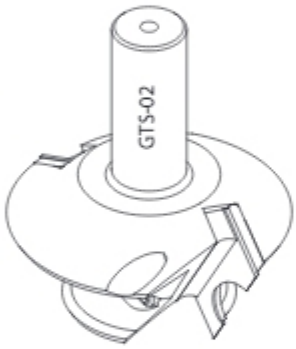

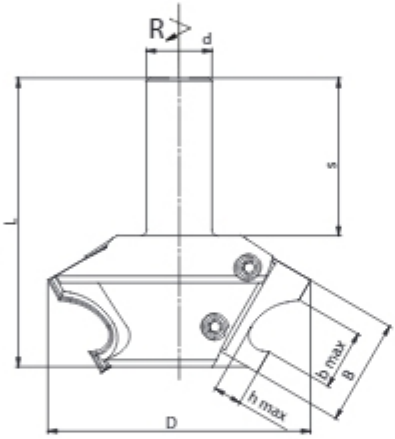

Universal profile cutter head, type **GTS-01** and **GTS-02** with two cutting teeth, designed for professional machining of solid wood and wood-based materials such as chipboard, MDF and others. The cutter head is used for surface profiling. Profile, which shape should remain within dimensions shown in the drawing is made only according to individual order. Universal cutter head, apart from cutting knife, includes also clamping wedges with shape matching the profile insert.

Type of work: profiling

Material: solid hardwood, glued wood, chipboard, MDF and others.



Example of profile for shank cutter head GTS-01.02

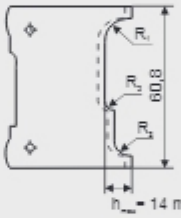

Example of profile for shank cutter head GTS-01.01

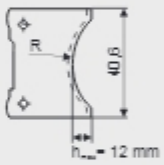

Maximum depth of profile knives for width 60 mm and 40 mm.





D n d z	82 12000 25 2	86 12000 25 2	100 12000 25 2
B mm	GTS.01.01	GTS.01.02	GTS.02
40	+		+
60		+	

Catalogue number (without inserts)	Type	D mm	dxs mm	b_{max} mm	h_{max} mm	z			
GTS.01.01.K	GTS-01.01	82	25x55	32	12	2	HM	R	+
GTS.01.02.K	GTS-01.02	86	25x60	52	14	2	HM	R	+

Spare parts for cutter heads GTS-01 I GTS-02

Cat. nr	Name	Dimensions			Cat. nr	Name	Dimensions		
	Knife	B x 30 x 1,5		+		Clamping block	B-2 x 12 x 8		•
	Support instert	B x 28 x 1,5		+	WHAW00005	Screw	M8x16		•

GTZ-01 R or L

Set of cutter heads on shank, type **GTZ-01** with suitable number of cutting teeth designed for professional machining of solid wood and wood-based materials such as chipboard, MDF and others. The set is used for edge beveling of the machined elements. Width is regulated with spacer rings included in the set.

Type of work: edge profiling, rounding, beveling.

Material: solid hardwood, glued wood, chipboard, MDF and others.

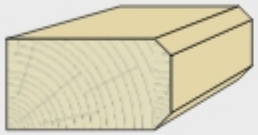

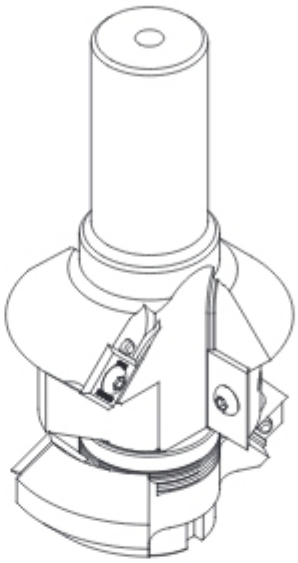

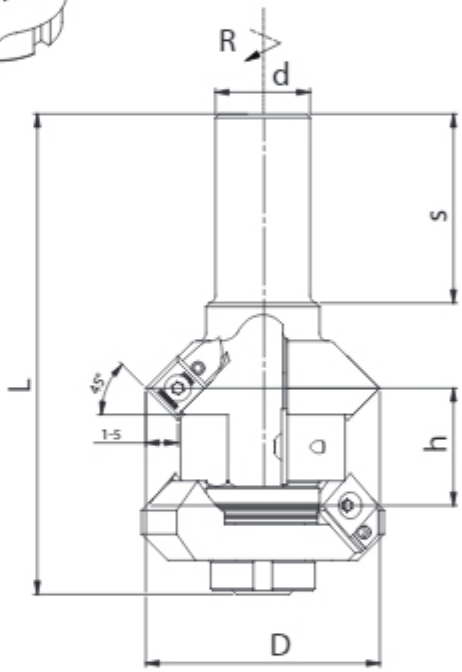

D n d z	65 12000 25 2+2
h mm	
10-22	+
20-32	+
30-42	+

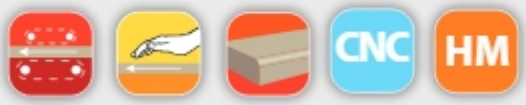



Catalogue number	Type	D mm	dxs mm	h mm	L mm	z			
GTZ.01.07	GTZ-01	65	20x50	10-22	127	2	HM	R	+
GTZ.01.01	GTZ-01	65	25x50	10-22	127	2	HM	R	+
GTZ.01.05	GTZ-01	65	25x50	20-32	137	2	HM	R	+
GTZ.01.03	GTZ-01	65	25x50	30-42	150	2	HM	R	+

Spare parts for cutter heads GTZ-01

Cat. nr	Name	Dimensions	
N0000805	Knife	20 x 12 x 1,5	•
N0000813	Knife	12 x 12 x 1,5	•
N0000808	Knife	30 x 12 x 1,5	•

Cat. nr	Name	Dimensions	
N0000809	Knife	40 x 12 x 1,5	•
WHAS00004	Screw STAMPF 94	M4x6	•
WHAI00003	Locating pin	3x6	•

GTZ-06 R or L

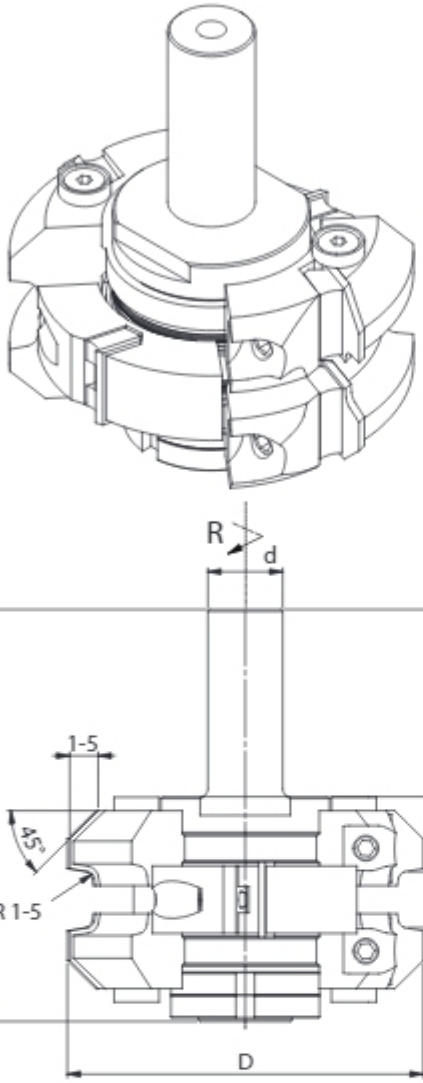

Set of cutter heads on shank, type **GTZ-06** with suitable number of cutting teeth designed for professional machining of solid wood and wood-based materials such as chipboard, MDF and others. The set is used for rounding and edge beveling of the machined elements. Increased regulation range. Width is regulated with spacer rings included in the set.

Type of work: edge profiling, rounding, beveling.

Material: solid hard wood, glued wood, chipboard, MDF and others.

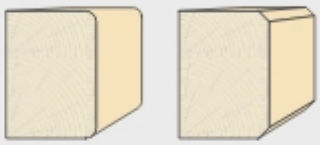

D d L z	95 12000 25 2+2
h mm	
10-30	+
16-40	+
16-50	+
20-55	+



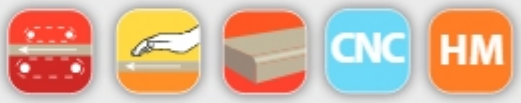

Catalogue number	Type	D mm	dxs mm	h mm	R mm	L mm	z			
GTZ.06.15.00	GTZ-06	95	25x50	10-30	5	120	2	HM	R	+
GTZ.06.03.00	GTZ-06	95	25x50	16-40	5	130	2	HM	R	+
GTZ.06.01.00	GTZ-06	95	25x50	16-50	3	140	2	HM	R	+

Spare parts for cutter heads GTZ-06

Cat. nr	Name	Dimensions		
	Profile knife P/L	20x20x2 R		+
N0000810	Knife	50 x 12 x 1,5		•
N0000808	Knife	30 x 12 x 1,5		•
N0000809	Knife	40 x 12 x 1,5		•

Radius R and edge beveling angle should be given with the order.

Cat. nr	Name	Dimensions		
WHAT00044	Weating sleeve	12x6,5x3,6		+
WHAS00004	Screw STAMPF 94	M4x6		•
WHAW00004	Screw DIN 915	M6x16		•
WHAW00005	Screw DIN 915	M8x16		•
WHAS00006	Screw TOR 1128	M6x10		•

Weldon

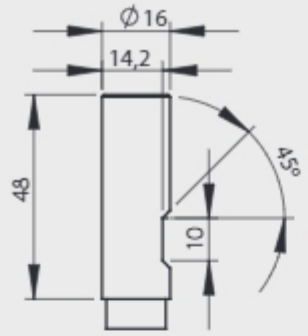



Homag / Weeke

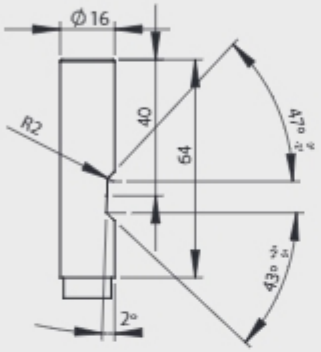



Seeger

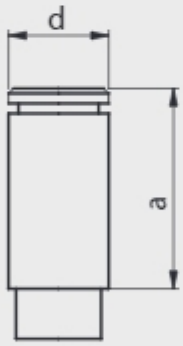



With flat part

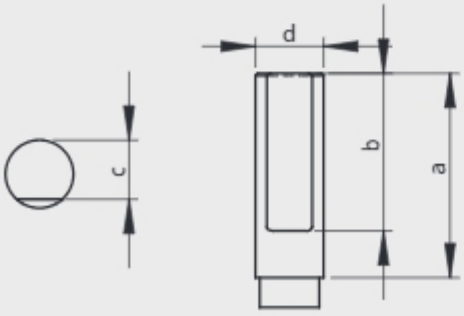



When ordering shank tools with non-standard clamping, type of shank part and necessary dimensions should be given.

THM-01 R

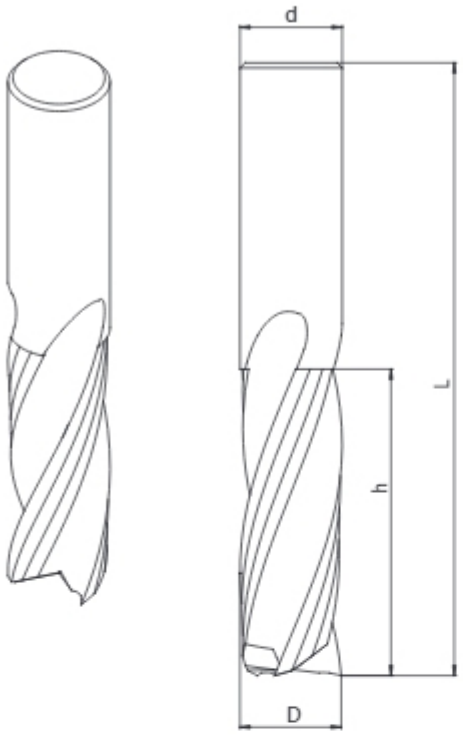

Shank cutter, type **THM-01** with two or three cutting teeth, designed for professional machining of solid wood and wood-based materials such as chipboard, MDF and others. The cutter is used for groove finishing, formatting and nesting. Special geometry guarantees chip flow up.

Type of work: precise grooving, formatting.

Material: solid softwood, solid hard wood, glued wood, chipboard, MDF, plastics.

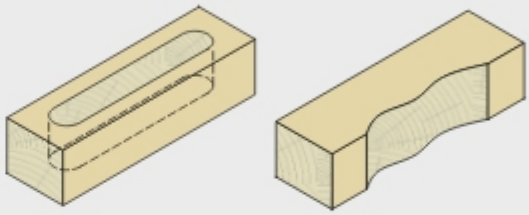

Catalogue number	Type	D mm	h mm	L mm	z	n_{max}		
THM.01.09/022	THM-01	6	25	60	2	24000	HM	•
THM.01.09/023*	THM-01	6	25	70	2	24000	HM	•
THM.01.09/006	THM-01	6	25	70	3	24000	HM	•
THM.01.09/024	THM-01	6	30	70	2	24000	HM	•
THM.01.07/017	THM-01	8	25	70	2	24000	HM	•
THM.01.07/013	THM-01	8	32	80	3	24000	HM	•
THM.01.06/025	THM-01	10	32	70	2	24000	HM	•
THM.01.06/001	THM-01	10	32	70	3	24000	HM	•
THM.01.06/026	THM-01	10	45	100	2	24000	HM	•
THM.01.01/001	THM-01	12	32	80	3	24000	HM	•
THM.01.01/003	THM-01	12	52	100	3	24000	HM	•
THM.01.02/001	THM-01	14	32	80	3	24000	HM	•
THM.01.02/005	THM-01	14	55	110	3	24000	HM	•
THM.01.03/001	THM-01	16	35	90	3	24000	HM	•
THM.01.03/026	THM-01	16	60	110	3	24000	HM	•
THM.01.04/001	THM-01	18	52	100	3	24000	HM	•
THM.01.05/001A	THM-01	20	55	110	3	24000	HM	•
THM.01.05/002	THM-01	20	70	120	3	24000	HM	•

* THM.01.09/023 - shank part d=8 mm

THM-02 L

Shank cutter, type **THM-02** L with two or three cutting teeth, designed for professional machining of solid wood and wood-based materials such as chipboard, MDF and others. The cutter is used for groove finishing, formatting and nesting. Special geometry guarantees chip flow up.

Type of work: precise grooving, formatting.

Material: solid softwood, solid hard wood, glued wood, chipboard, MDF, plastics.

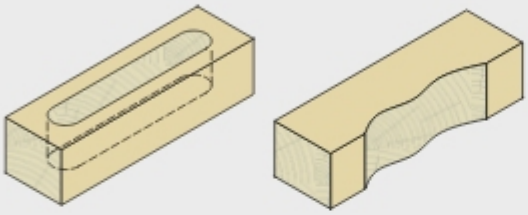

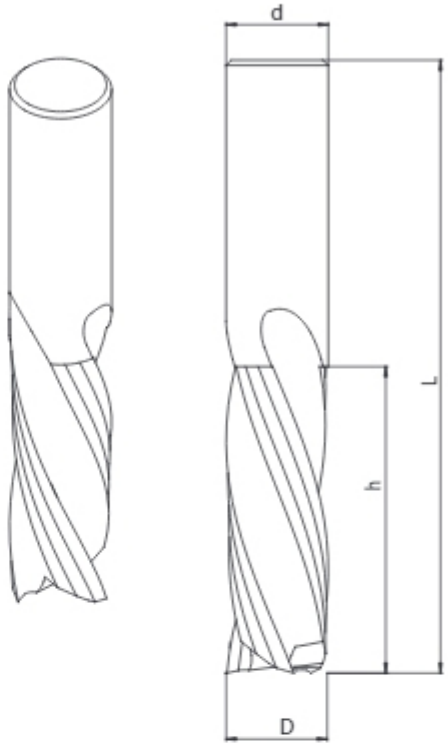

Catalogue number	Type	D mm	h mm	L mm	z	n_{max}		
THM.02.07/002	THM-02	8	25	70	2	24000	HM	•
THM.02.06/002	THM-02	10	32	70	2	24000	HM	•
THM.02.01/001	THM-02	12	32	80	3	24000	HM	+
THM.02.02/001	THM-02	14	32	80	3	24000	HM	+
THM.02.03/001	THM-02	16	35	90	3	24000	HM	+
THM.02.04/001	THM-02	18	52	100	3	24000	HM	+
THM.02.05/001A	THM-02	20	55	110	3	24000	HM	•

THM-03 / 04

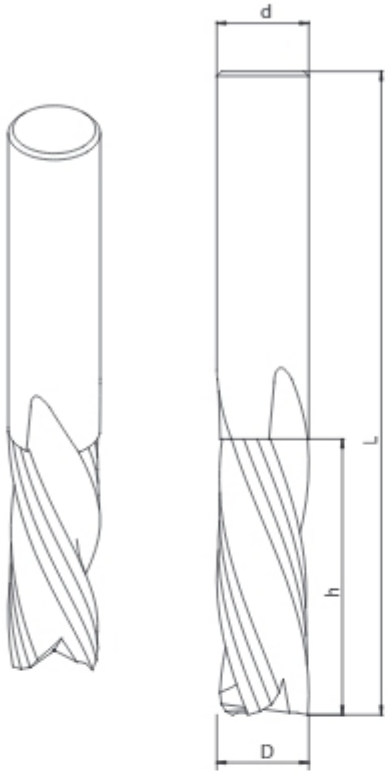

Shank cutter, type **THM-03** or **THM-04** with two or three cutting teeth, designed for professional machining of solid wood and wood-based materials such as chipboard, MDF and others. The cutter is used for groove finishing, formatting and nesting. Special geometry guarantees chip flow down. Increased chip flow efficiency.

Type of work: precise grooving, formatting.

Material: solid softwood, solid hard wood, glued wood, chipboard, MDF, plastics.

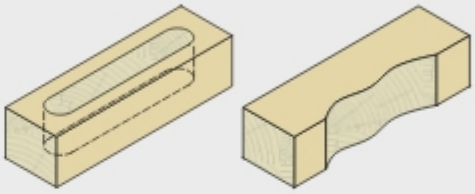



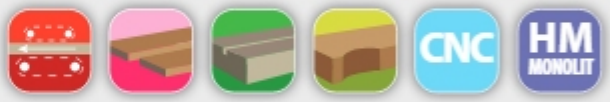

6

THM-03 R

Catalogue number	Type	D mm	h mm	L mm	z	n_{max}		
THM.03.09/001	THM-03	6	22	60	2	24000	HM	+
THM.03.07/006	THM-03	8	25	70	2	24000	HM	+
THM.03.06/001	THM-03	10	32	70	3	24000	HM	+
THM.03.01.013	THM-03	12	32	80	3	24000	HM	+
THM.03.02/001	THM-03	14	32	80	3	24000	HM	+
THM.03.03/003	THM-03	16	35	90	3	24000	HM	+
THM.03.05.002	THM-03	20	55	110	3	24000	HM	+

THM-04 L

Catalogue number	Type	D mm	h mm	L mm	z	n_{max}		
THM.04.07/002	THM-04	8	25	70	2	24000	HM	+
THM.04.06/001	THM-04	10	32	70	3	24000	HM	+
THM.04.01/001	THM-04	12	32	80	3	24000	HM	+
THM.04.02/001	THM-04	14	32	80	3	24000	HM	+
THM.04.03/001	THM-04	16	35	90	3	24000	HM	+
THM.04.05.001	THM-04	20	55	110	3	24000	HM	+

THM-05 / 35 R

THM-05

Shank cutter, type **THM-05** with two or three cutting teeth, designed for professional machining of solid wood and wood-based materials such as chipboard, MDF and others. The cutter is used for roughing. Special geometry guarantees chip flow up. The cutter working with increased machining parameters.

THM-35 Premium

Shank cutter with increased life, type **THM-35 Premium** with relieved flank (clearance) face and polished cutting surfaces, designed for professional cutting of solid wood and wood based materials. Cutter designed for very efficient roughing. Adapted to increased work parameters.

Type of work: pre-grooving, pre-formatting.

Material: solid softwood, solid hard wood, glued wood, chipboard, MDF, plastics.



THM-05 THM-35 Premium

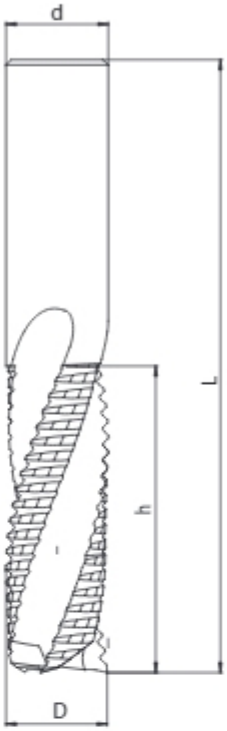

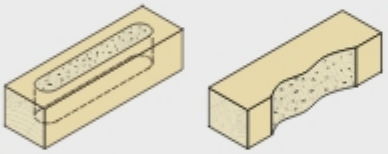





Catalogue number THM-05		Catalogue number THM-35		D mm	h mm	L mm	z	n_{max}	
THM.05.09/002	•			6	25	60	3	24000	HM
THM.05.09/006	•	THM.35.09.006	•	6	30	70	2	24000	HM
THM.05.07/010	•	THM.35.07.010	•	8	25	70	2	24000	HM
THM.05.07/004	•			8	32	80	3	24000	HM
THM.05.06/024	•	THM.35.06.024	•	10	32	70	2	24000	HM
THM.05.06/001	•	THM.35.06.001	•	10	32	70	3	24000	HM
THM.05.06/025	•			10	45	100	2	24000	HM
THM.05.01/001	•	THM.35.01.001	•	12	32	80	3	24000	HM
THM.05.01/008	•			12	52	100	3	24000	HM
THM.05.02/001	•	THM.35.02.001	•	14	32	80	3	24000	HM
THM.05.02/024	•			14	55	110	3	24000	HM
THM.05.03/001	•	THM.35.03.001	•	16	35	90	3	24000	HM
THM.05.03/057	•			16	60	110	3	24000	HM
THM.05.04/001	•	THM.35.04.001	+	18	52	100	3	24000	HM
THM.05.05/001A	•	THM.35.05.001A	•	20	55	110	3	24000	HM
THM.05.05/005	•			20	70	120	3	24000	HM

THM-06 / 36 L

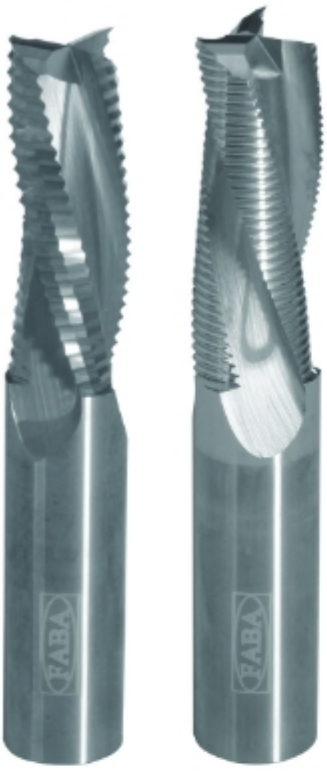

THM-06 THM-36 Premium

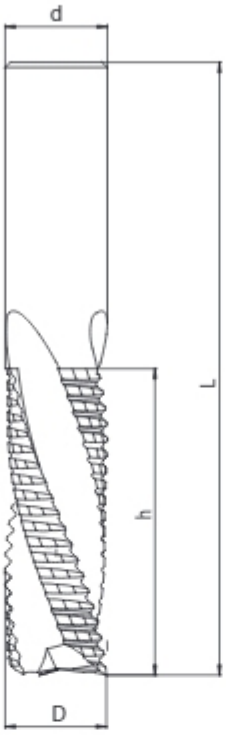

THM-06

Shank cutter, type **THM-06** with two or three cutting teeth, designed for professional machining of solid wood and wood-based materials such as chipboard, MDF and others. The cutter is used for pre-grooving. Special geometry guarantees chip flow up. The cutter working with increased machining parameters.

THM-36 Premium

Shank cutter with increased life, type **THM-36 Premium** with relieved flank (clearance) face and polished cutting surfaces, designed for professional cutting of solid wood and wood based materials. Cutter designed for very efficient roughing. Adapted to increased work parameters.

Type of work: pre-grooving, pre-formatting.

Material: solid softwood, solid hard wood, glued wood, chipboard, MDF, plastics.

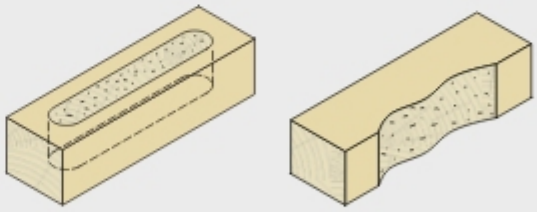

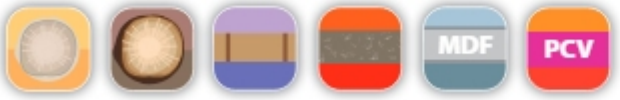

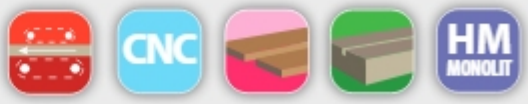

Catalogue number THM-06		Catalogue number THM-36		D mm	h mm	L mm	z	n_{max}	
THM.06.07/002	•	THM.36.07.002	•	8	25	70	2	24000	HM
THM.06.06/003	•	THM.36.06.003	•	10	32	70	2	24000	HM
THM.06.01/001	+	THM.36.01.001	+	12	32	80	3	24000	HM
THM.06.02/001	+	THM.36.02.001	+	14	32	80	3	24000	HM
THM.06.03/001	+	THM.36.03.001	+	16	35	90	3	24000	HM
THM.06.04/001	+	THM.36.04.001	+	18	52	100	3	24000	HM
THM.06.05/001A	+	THM.36.05.001A	+	20	55	110	3	24000	HM

THM-07 / 08

Shank cutter, type **THM-07** or **THM-08** with three cutting teeth, designed for professional machining of solid wood and wood-based materials such as chipboard, MDF and others. The cutter is used for pre-grooving, grooving, formatting and nesting. Special geometry guarantees chip flow up. Additional chip breakers allow for better chip fragmentation. Increased chip flow efficiency. The cutter working with increased machining parameters.

Type of work: grooving, pre-formatting and precise formatting.

Material: solid softwood, solid hard wood, glued wood, chipboard, MDF, plastics.

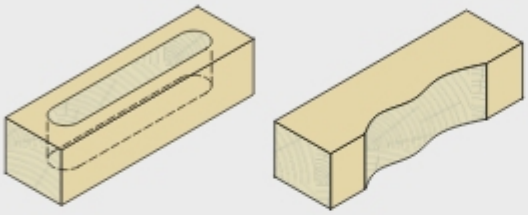

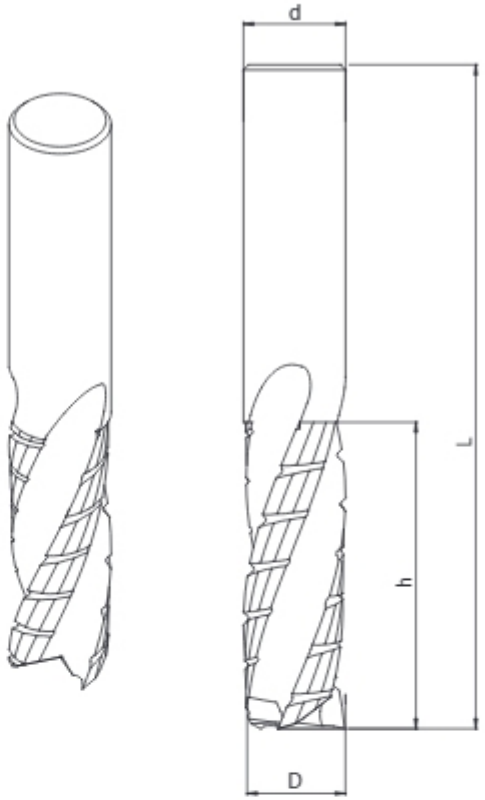

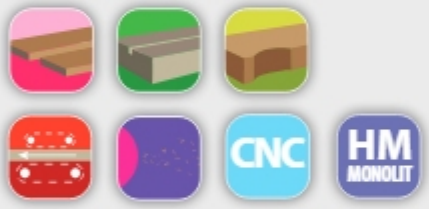



THM-07 R

Catalogue number	Type	D mm	h mm	L mm	z	n_{max}		
THM.07.06/001	THM-07	10	25	70	3	24000	HM	+
THM.07.01/001	THM-07	12	32	80	3	24000	HM	+
THM.07.03/001	THM-07	16	52	110	3	24000	HM	+
THM.07.05/001A	THM-07	20	55	110	3	24000	HM	+

THM-08 L

Catalogue number	Type	D mm	h mm	L mm	z	n_{max}		
THM.08.06/001	THM-08	10	25	70	3	24000	HM	+
THM.08.01/001	THM-08	12	32	80	3	24000	HM	+
THM.08.03/001	THM-08	16	52	110	3	24000	HM	+
THM.08.05/001A	THM-08	20	55	110	3	24000	HM	+

THM-09 R

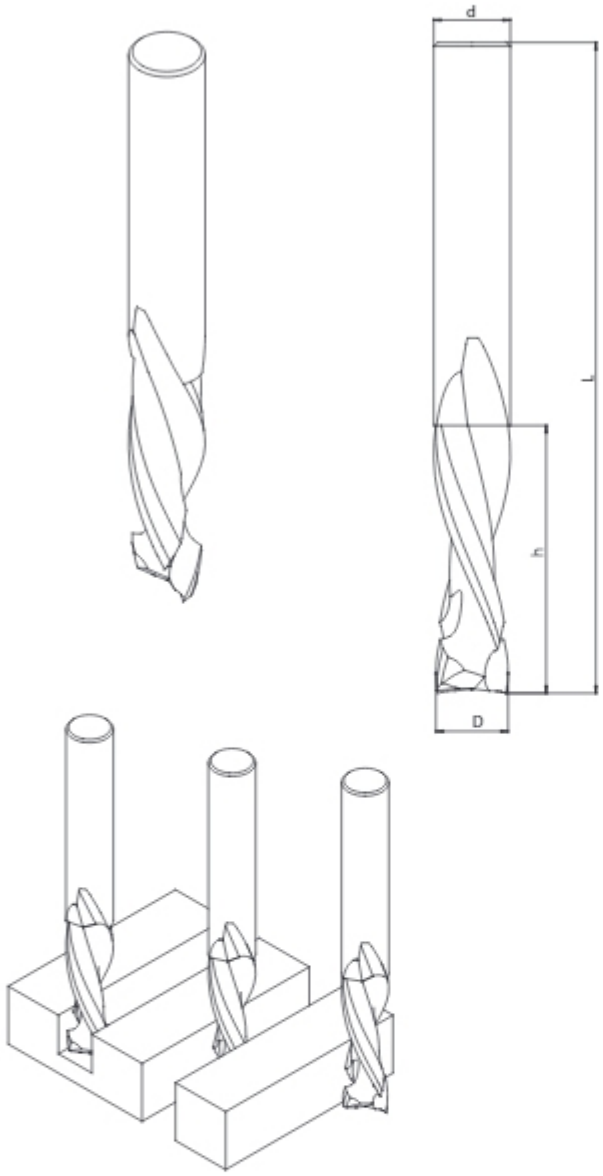

Shank cutter, type **THM-09** with two cutting teeth, designed for professional machining of solid wood and wood-based materials such as chipboard, MDF and others. The cutter is used for precise formatting of two-sided veneered board. No veneer ripping thank to alternative direction of turbo-type spiral cutting line. The cutter working with increased machining parameters. Lower cutting resistance. Multiple sharpening possibility.

Type of work: finishing.

Material: solid softwood, solid hard wood, glued wood, chipboard, MDF, plastics.





Catalogue number	Type	D mm	h mm	L mm	z	n_{max}		
THM.09.07.002	THM-09	8	32	80	2+2	24000	HM	+
THM.09.07.010	THM-09	8	32	80	3+3	24000	HM	+
THM.09.06/001	THM-09	10	32	80	2+2	24000	HM	•
THM.09.06.012	THM-09	10	32	80	3+3	24000	HM	+
THM.09.01.024	THM-09	12	32	80	3+3	24000	HM	+
THM.09.01/001	THM-09	12	42	90	2+2	24000	HM	•
THM.09.02/001	THM-09	14	52	110	2+2	24000	HM	+
THM.09.03/001	THM-09	16	52	110	2+2	24000	HM	+
THM.09.03.015	THM-09	16	52	110	3+3	24000	HM	+
THM.09.05/001	THM-09	20	52	110	2+2	24000	HM	+
THM.09.05.005	THM-09	20	52	110	3+3	24000	HM	+

THM-10 R

Shank cutter, type **THM-10** with three cutting teeth, designed for professional machining of solid wood and wood--based materials such as chipboard, MDF and others. The cutter is used for pre-cutting holes for door locks. Cutting depth up to 95 mm with chip flow. The cutter working with increased machining parameters.

Type of work: deep pre-cutting.

Material: solid softwood, solid hard wood, glued wood, chipboard, MDF, plastics.

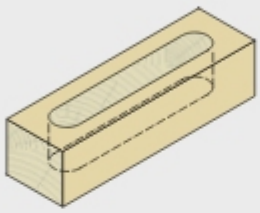

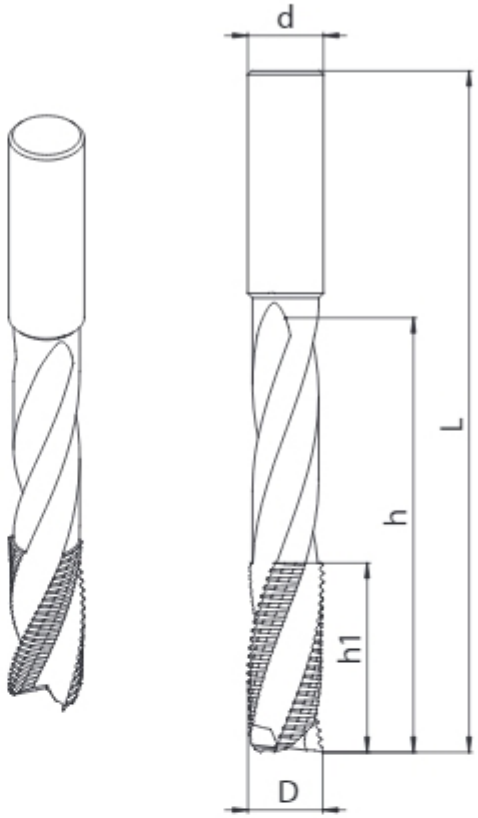

Catalogue number	Type	D mm	d mm	h_1 mm	h mm	L mm	z	n_{max}		
THM.10.03/001	THM-10	16	16	60	100	150	3	24000	HM	•
THM.10.03.036	THM-10	16	16	60	100	150	3	24000	HM	+
THM.10.03/002	THM-10	16,5	18	60	100	160	3	24000	HM	+
THM.10.04/003	THM-10	18	18	60	100	160	3	24000	HM	+

THM-11 / 12

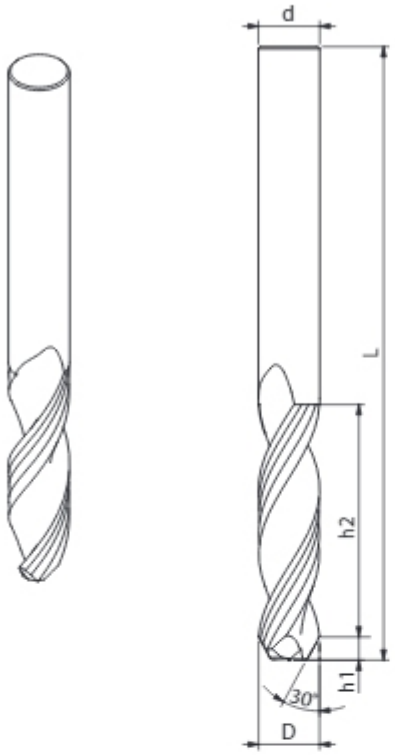

Shank cutter, type **THM-11** or **THM-12** with three cutting teeth, designed for professional machining of solid wood and wood-based materials such as chipboard, MDF and others. The cutter is used for groove finishing, formatting as well as dowel and through drilling. Additional 30° bevel increases edge quality after cutting. Special geometry guarantees chip flow up.

Type of work: grooving, formatting, finishing, drilling.

Material: solid softwood, solid hard wood, glued wood, chipboard, MDF, plastics.

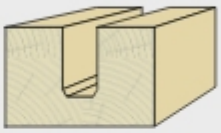



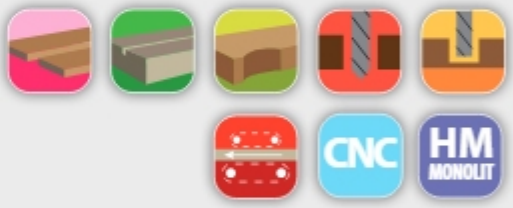

THM-11 R

Catalogue number	Type	D mm	h_2 mm	h_1 mm	L mm	z	n_{max}		
THM.11.01/001	THM-11	12	45	9	110	3	24000	HM	+
THM.11.02/001	THM-11	14	40	9	100	3	24000	HM	+
THM.11.03/001	THM-11	16	50	9	120	3	24000	HM	+

THM-12 L

Catalogue number	Type	D mm	h_2 mm	h_1 mm	L mm	z	n_{max}		
THM.12.01/001	THM-12	12	45	9	110	3	24000	HM	+
THM.12.02/001	THM-12	14	40	9	100	3	24000	HM	+
THM.12.03/001	THM-12	16	50	9	120	3	24000	HM	+

THM-13 R

Monolith shank cutter, type **THM-13** with two cutting teeth, designed for professional machining of solid wood and wood-based materials such as chipboard, MDF and others. The cutter is used for engraving as well as beveling and counterboring.

Type of work: engraving, beveling, counterboring.

Material: solid softwood, solid hard wood, glued wood, chipboard, MDF, plastics.

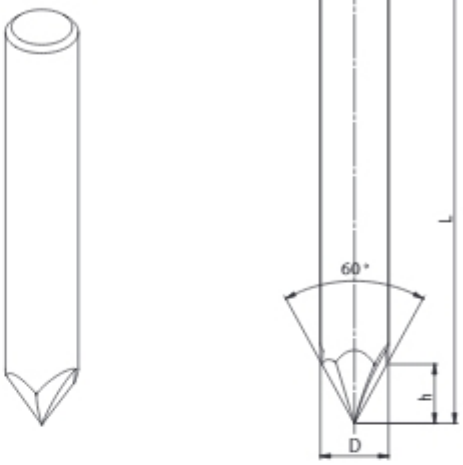

Catalogue number	Type	D mm	h mm	L mm	z	n_{max}		
THM.13.07/001	THM-13	8	7	70	2	24000	HM	•
THM.13.01/001	THM-13	12	9	80	2	24000	HM	•

THM-14 R

Monolith shank cutter, type **THM-14** with two cutting teeth, designed for professional machining of solid wood and wood-based materials such as chipboard, MDF and others. The cutter is used for engraving and shape grooving.

Type of work: engraving, shape-grooving.

Material: solid softwood, solid hard wood, glued wood, chipboard, MDF, plastics.

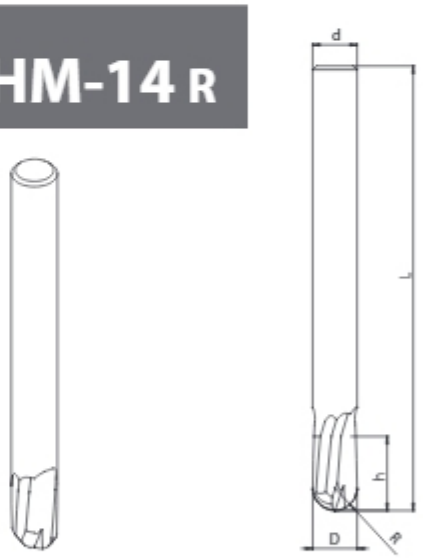

Catalogue number	Type	D mm	h mm	L mm	R mm	z	n_{max}		
THM.14.09/001	THM-14	6	9	60	3	2	24000	HM	•
THM.14.09.017	THM-14	6	22	60	3	2	24000	HM	+
THM.14.07.006	THM-14	8	25	70	4	2	24000	HM	+
THM.14.07/001	THM-14	8	11	70	4	2	24000	HM	•
THM.14.06/002	THM-14	10	13	80	5	2	24000	HM	•
THM.14.06.017	THM-14	10	32	80	5	2	24000	HM	+
THM.14.01.013	THM-14	12	32	80	6	2	24000	HM	+
THM.14.03.011	THM-14	16	52	110	8	2	24000	HM	+

THM-15 / 16

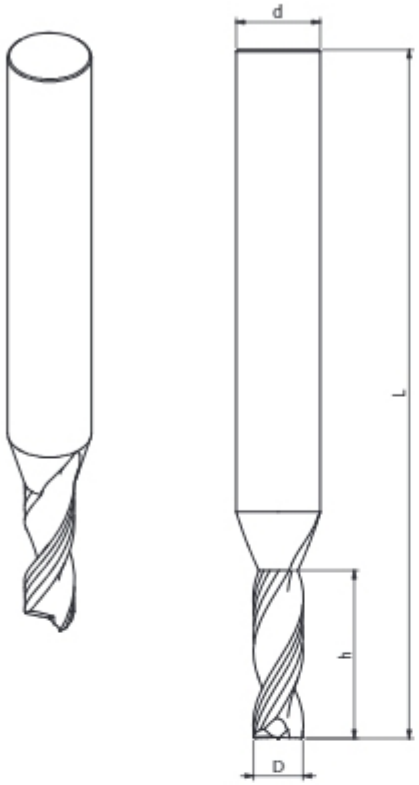

Monolith shank cutter, type **THM-15** or **THM-16** with two or three cutting teeth, designed for professional machining of solid wood and wood-based materials such as chipboard, MDF and others. The cutter is used for groove finishing, formatting and nesting. Special geometry guarantees chip flow up. Thicker shank part.

Type of work: grooving, finishing.

Material: solid softwood, solid hard wood, glued wood, chipboard, MDF, plastics.

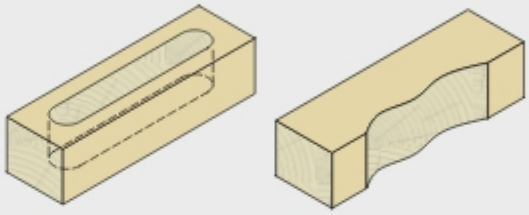





THM-15 R

Catalogue number	Type	D mm	d mm	h mm	L mm	z	n_{max}		
THM.15.12/001	THM-15	5	6	15	60	2	24000	HM	+
THM.15.09/001	THM-15	6	8	20	70	2	24000	HM	+
THM.15.08/001	THM-15	7	8	20	70	2	24000	HM	+
THM.15.07/001	THM-15	8	10	30	80	2	24000	HM	+
THM.15.17/001	THM-15	9	10	30	80	2	24000	HM	+
THM.15.06/001	THM-15	10	12	30	80	2	24000	HM	+

THM-16 L

Catalogue number	Type	D mm	d mm	h mm	L mm	z	n_{max}		
THM.16.12/001	THM-16	5	6	15	60	2	24000	HM	+
THM.16.09/001	THM-16	6	8	20	70	2	24000	HM	+
THM.16.07/001	THM-16	8	10	30	80	2	24000	HM	+

THM-25 step

Step drills **THM-25** are produced only on client's individual request.
Step and profile shank cutters are offered with positive and negative helix line.
Optionally, the tool can be produced with a different profile.

Advantages of using stepped and profile THM:

- possibility of performing a couple of operations with one tool,
- eliminating machining runout by using only one mounting of the tool,
- faster completion of the operation compared to working with a few tools,
- smaller quantity of holders on the machine,
- increased life and cutting quality,
- lower energy costs,
- lower costs of discrete manufacturing.

Material: solid softwood, solid hard wood, glued wood, chipboard, MDF, plastics.

Order should include all dimensions shown in the drawing.

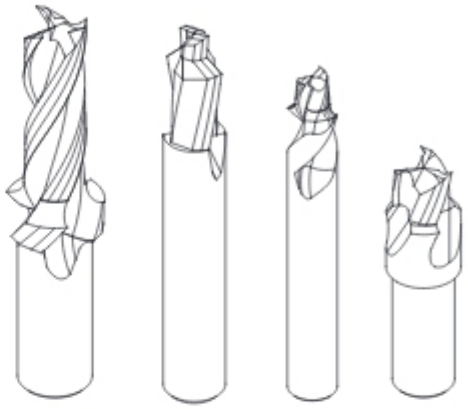

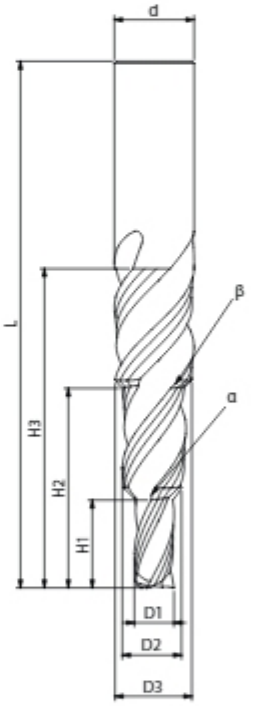



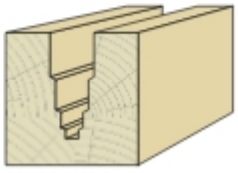


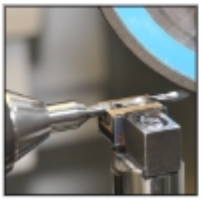










7. Drills

Drills

Drills with HM working part and holder made from steel permanently joint with carbide, brazed drills and monolithic drills made entirely from HM. Drills with HM tips, designed for professional machining of solid soft, hard and glued wood and other wood-based materials. They are used for through and dowel drilling, counterboring and drilling slots for hinge boxes.

Drills are manufactured from the highest quality carbide in a special shaping technology, properly selected for the machining process and material as well as type of work, parameters and conditions prevailing during the machining, in order to guarantee proper work of the tool and chip flow from the machining zone both in standard and extreme conditions. Monolithic drills are made entirely from high quality small-grain carbide in the advanced profile sharpening technology.

The tools are designed and produced with special rake face and optimized chip flow. Very precise manufacturing allows for working with rotation speed up to 9000 r,p,m. All drills are manufactured on modern CNC machines of world-renowned producers, which guarantee high accuracy and precision of the produced tools. Quality control takes place directly on the machine by using special measurement systems as well as outside the machine on special measurement devices. The construction and production remains in accordance with all points of safety standard EN/PN-847-1 concerning tools for mechanical woodworking.

The *Drills* chapter includes only example types of drills with their basic dimensions. On special request, we can suggest, design and produce a proper tool for the required type of machining, material and parameters and conditions of work. Production time of drills marked as "+" as well as special ones made on client's request usually doesn't exceed 9-15 working days.

Orders should include

- working part diameter (D),
- shank part diameter (d),
- shank length (s),
- working part length (h),
- type of machined material,
- profile drawing with dimensions or profile sample,
- other information relevant for designing and production process.



Contents

7. Drills

Pictograms 7.3

7.1 Dowel drills Professional 7.5

7.2 Dowel drills SuperFinish 7.9

7.3 Dowel drills SuperFinish LongLife 7.12

7.4 Through drills Professional 7.16

7.5 Through drills SuperFinish 7.17

7.6 Through drills SuperFinish LongLife 7.19

7.7 Cutter heads with exchangeable inserts 7.26

7.8 Drill holders 7.27

7.9 Countersinks 7.28

Pictograms


solid dry softwood


solid dry hardwood


chipboard


glued wood



MDF board


dowel drills


through drills


cylinder boring bits


mechanical feed



carbide



carbide monolith

Dowel drills

Type	WNL-01	WNL-01S	WNM-01S
Series	☆☆☆ PROFESSIONAL DRILLS	☆☆☆☆ SUPER FINISH	☆☆☆☆☆ SUPER FINISH LONG LIFE
Drill			
Material	☆☆☆ Wood and glued wood ☆☆ MDF, HDF and similar materials ☆ Laminated board * Board covered with foil, paper and veneer	☆☆☆☆ Wood and glued wood ☆☆☆☆ MDF, HDF and similar materials ☆☆☆☆ Laminated board ☆☆☆☆ Board covered with foil, paper and veneer	☆☆☆☆☆ Wood and glued wood ☆☆☆☆☆ MDF, HDF and similar materials ☆☆☆☆☆ Laminated board ☆☆☆☆☆ Board covered with foil, paper and veneer
Geometry			
Description	Professional dowel drills with HM tip, type WNL-01 and WNL-02. Standard brazed HM drills, the most economical solution, designed for professional machining of wood and wood based materials. Recommended for wood, glued wood and plywood. If high quality hole finishing is not necessary, they can be used for making holes in chipboard, MDF, HDF and similar.	Dowel drills with HM tip and SuperFinish geometry, type WNL-01S and WNL-02S. Brazed HM drills with SuperFinish geometry is an optimal solution for clean and tear out free drilling in wood and wood based materials as chipboard, laminated board, MDF, HDF and similar as well as various type of board covered in paper, foil, veneer etc	Dowel monolith HM drills with increased life and SuperFinish geometry, type WNM-01S. SuperFinish and LongLife are drills with full carbide core (the whole working part is a carbide monolith) and SuperFinish geometry. A perfect solution for clean and tear out free drilling in wood and wood based materials as chipboard, laminated board, MDF, HDF and similar as well as various type of board covered in paper, foil, veneer etc.

Solution: * - not recommended ☆ - acceptable ☆☆ - good ☆☆☆ - very good ☆☆☆☆ - optimal ☆☆☆☆☆ - perfect

WNL-01

Professional dowel drills with HM tip, type **WNL-01**, designed for professional machining of wood and wood based materials such chipboard, MDF and others, for use on multi--spindle drilling machines.
Standard brazed HM drills, recommended for wood, glued wood and plywood.

Type of work: dowel drilling.

Material: wood and glued wood, plywood, chipboard, MDF, HDF and similar.





PROFESSIONAL DRILLS

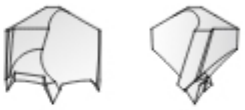



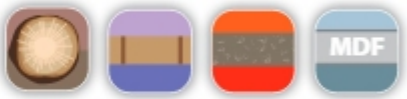

H=25 mm L=57,5 mm

PROFESSIONAL DRILLS

Catalogue number R	Catalogue number L	Type	D mm	dxa mm	L mm	H mm	
WNL01.050.10.057.025R	WNL01.050.10.057.025L	WNL-01	5	10 x 27	57,5	25	+
WNL01.060.10.057.025R	WNL01.060.10.057.025L	WNL-01	6	10 x 27	57,5	25	+
WNL01.070.10.057.025R	WNL01.070.10.057.025L	WNL-01	7	10 x 27	57,5	25	+
WNL01.075.10.057.025R	WNL01.075.10.057.025L	WNL-01	7,5	10 x 27	57,5	25	+
WNL01.080.10.057.025R	WNL01.080.10.057.025L	WNL-01	8	10 x 27	57,5	25	+
WNL01.082.10.057.025R	WNL01.082.10.057.025L	WNL-01	8,2	10 x 27	57,5	25	+
WNL01.100.10.057.025R	WNL01.100.10.057.025L	WNL-01	10	10 x 27	57,5	25	+
WNL01.120.10.057.025R	WNL01.120.10.057.025L	WNL-01	12	10 x 27	57,5	25	+
WNL01.140.10.057.025R	WNL01.140.10.057.025L	WNL-01	14	10 x 27	57,5	25	+
WNL01.150.10.057.025R	WNL01.150.10.057.025L	WNL-01	15	10 x 27	57,5	25	+

H=32 mm L=57,5 mm

PROFESSIONAL DRILLS

Catalogue number R	Catalogue number L	Type	D mm	dxa mm	L mm	H mm	
WNL01.050.10.057.032R	WNL01.050.10.057.032L	WNL-01	5	10 x 20	57,5	32	+
WNL01.060.10.057.032R	WNL01.060.10.057.032L	WNL-01	6	10 x 20	57,5	32	+
WNL01.070.10.057.032R	WNL01.070.10.057.032L	WNL-01	7	10 x 20	57,5	32	+
WNL01.075.10.057.032R	WNL01.075.10.057.032L	WNL-01	7,5	10 x 20	57,5	32	+
WNL01.080.10.057.032R	WNL01.080.10.057.032L	WNL-01	8	10 x 20	57,5	32	+
WNL01.082.10.057.032R	WNL01.082.10.057.032L	WNL-01	8,2	10 x 20	57,5	32	+
WNL01.100.10.057.032R	WNL01.100.10.057.032L	WNL-01	10	10 x 20	57,5	32	+
WNL01.120.10.057.032R	WNL01.120.10.057.032L	WNL-01	12	10 x 20	57,5	32	+
WNL01.140.10.057.032R	WNL01.140.10.057.032L	WNL-01	14	10 x 20	57,5	32	+
WNL01.150.10.057.032R	WNL01.150.10.057.032L	WNL-01	15	10 x 20	57,5	32	+

For „+" minimum order: 1) 50 pcs (D<10) 2) 30 pcs (D≥10)

PROFESSIONAL DRILLS

L=70 mm H=38 mm

Catalogue number R	Catalogue number L	Type	D mm	d x a mm	L mm	H mm	
WNL01.050.10.070.038R	WNL01.050.10.070.038L	WNL-01	5	10 x 27	70	38	+
WNL01.055.10.070.038R	WNL01.055.10.070.038L	WNL-01	5,5	10 x 27	70	38	+
WNL01.060.10.070.038R	WNL01.060.10.070.038L	WNL-01	6	10 x 27	70	38	+
WNL01.065.10.070.038R	WNL01.065.10.070.038L	WNL-01	6,5	10 x 27	70	38	+
WNL01.070.10.070.038R	WNL01.070.10.070.038L	WNL-01	7	10 x 27	70	38	+
WNL01.075.10.070.038R	WNL01.075.10.070.038L	WNL-01	7,5	10 x 27	70	38	+
WNL01.080.10.070.038R	WNL01.080.10.070.038L	WNL-01	8	10 x 27	70	38	+
WNL01.082.10.070.038R	WNL01.082.10.070.038L	WNL-01	8,2	10 x 27	70	38	+
WNL01.085.10.070.038R	WNL01.085.10.070.038L	WNL-01	8,5	10 x 27	70	38	+
WNL01.090.10.070.038R	WNL01.090.10.070.038L	WNL-01	9	10 x 27	70	38	+
WNL01.100.10.070.038R	WNL01.100.10.070.038L	WNL-01	10	10 x 27	70	38	+
WNL01.110.10.070.038R	WNL01.110.10.070.038L	WNL-01	11	10 x 27	70	38	+
WNL01.120.10.070.038R	WNL01.120.10.070.038L	WNL-01	12	10 x 27	70	38	+
WNL01.130.10.070.038R	WNL01.130.10.070.038L	WNL-01	13	10 x 27	70	38	•
WNL01.150.10.070.038R	WNL01.150.10.070.038L	WNL-01	15	10 x 27	70	38	•

PROFESSIONAL DRILLS

L=70 mm H=45 mm

Catalogue number R	Catalogue number L	Type	D mm	d x a mm	L mm	H mm	
WNL01.050.10.070.045R	WNL01.050.10.070.045L	WNL-01	5	10 x 20	70	45	+
WNL01.055.10.070.045R	WNL01.055.10.070.045L	WNL-01	5,5	10 x 20	70	45	+
WNL01.060.10.070.045R	WNL01.060.10.070.045L	WNL-01	6	10 x 20	70	45	+
WNL01.065.10.070.045R	WNL01.065.10.070.045L	WNL-01	6,5	10 x 20	70	45	+
WNL01.070.10.070.045R	WNL01.070.10.070.045L	WNL-01	7	10 x 20	70	45	+
WNL01.075.10.070.045R	WNL01.075.10.070.045L	WNL-01	7,5	10 x 20	70	45	+
WNL01.080.10.070.045R	WNL01.080.10.070.045L	WNL-01	8	10 x 20	70	45	+
WNL01.082.10.070.045R	WNL01.082.10.070.045L	WNL-01	8,2	10 x 20	70	45	+
WNL01.085.10.070.045R	WNL01.085.10.070.045L	WNL-01	8,5	10 x 20	70	45	+
WNL01.090.10.070.045R	WNL01.090.10.070.045L	WNL-01	9	10 x 20	70	45	+
WNL01.100.10.070.045R	WNL01.100.10.070.045L	WNL-01	10	10 x 20	70	45	+
WNL01.110.10.070.045R	WNL01.110.10.070.045L	WNL-01	11	10 x 20	70	45	+
WNL01.120.10.070.045R	WNL01.120.10.070.045L	WNL-01	12	10 x 20	70	45	+
WNL01.130.10.070.045R	WNL01.130.10.070.045L	WNL-01	13	10 x 20	70	45	+
WNL01.150.10.070.045R	WNL01.150.10.070.045L	WNL-01	15	10 x 20	70	45	+

For „+" minimum order: 1) 50 pcs (D<10) 2) 30 pcs (D≥10)

WNL-02

Professional dowel drills with HM tip and double helix line, type **WNL-02**, designed for professional machining of wood and wood based materials such chipboard, MDF and others, for use on multi-spindle drilling machines.
Standard brazed HM drills, recommended for wood, glued wood and plywood

Type of work: dowel drilling.

Material: wood and glued wood, plywood, chipboard, MDF, HDF and similar.

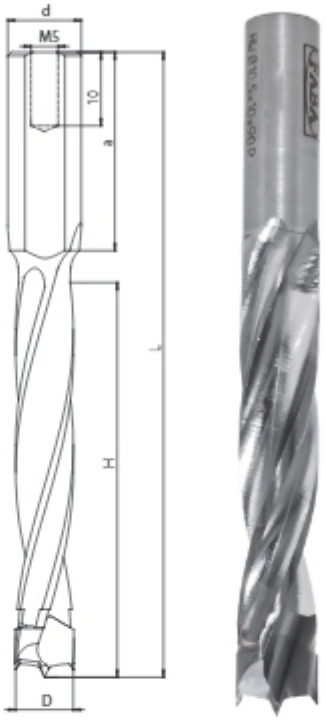

PROFESSIONAL DRILLS

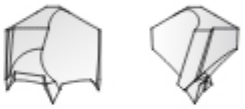





H=55 mm L=90 mm

PROFESSIONAL DRILLS

Catalogue number R	Catalogue number L	Type	D mm	dxa mm	L mm	H mm
WNL02.050.10.090.055R	WNL02.050.10.090.055L	WNL-02	5	10 x 27	90	55
WNL02.060.10.090.055R	WNL02.060.10.090.055L	WNL-02	6	10 x 27	90	55
WNL02.070.10.090.055R	WNL02.070.10.090.055L	WNL-02	7	10 x 27	90	55
WNL02.075.10.090.055R	WNL02.075.10.090.055L	WNL-02	7,5	10 x 27	90	55
WNL02.080.10.090.055R	WNL02.080.10.090.055L	WNL-02	8	10 x 27	90	55

H=65 mm L=90 mm

PROFESSIONAL DRILLS

Catalogue number R	Catalogue number L	Type	D mm	dxa mm	L mm	H mm
WNL02.050.10.090.065R	WNL02.050.10.090.065L	WNL-02	5	10 x 20	90	65
WNL02.060.10.090.065R	WNL02.060.10.090.065L	WNL-02	6	10 x 20	90	65
WNL02.070.10.090.065R	WNL02.070.10.090.065L	WNL-02	7	10 x 20	90	65
WNL02.080.10.090.065R	WNL02.080.10.090.065L	WNL-02	8	10 x 20	90	65
WNL02.100.10.090.065R	WNL02.100.10.090.065L	WNL-02	10	10 x 20	90	65
WNL02.120.10.090.065R	WNL02.120.10.090.065L	WNL-02	12	10 x 20	90	65

For „+" minimum order: 1) 50 pcs (D<10) 2) 30 pcs (D≥10)

WNL-01S

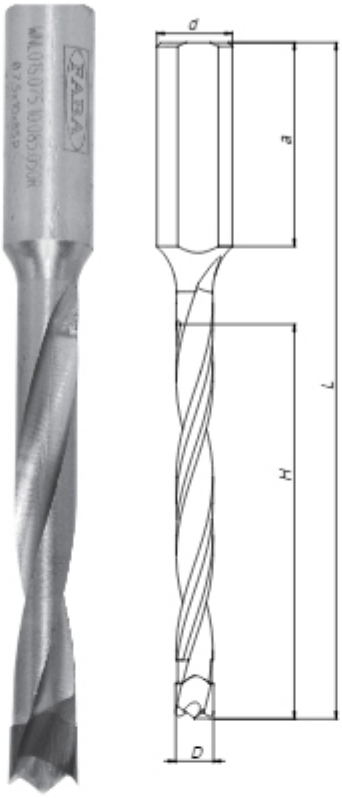

Dowel drills with HM tip and SuperFinish geometry, type WNL-01S designed for professional and precise machining of wood and wood based materials such chipboard, laminated board, MDF, HDF and others, as well as various type of board covered in paper, foil, veneer, for use on multi-spindle drilling machines.

Type of work: dowel drilling.

Material: wood and glued wood, plywood, chipboard, MDF, HDF and similar, laminated board, board covered in paper, foil, veneer.

SUPER FINISH



MDF

HM MONOLIT

7

SUPER FINISH

L=57,5 mm

H=25 mm

Catalogue number R	Catalogue number L	Type	D mm	d x a mm	L mm	H mm
WNL01S.050.08.057.025R	WNL01S.050.08.057.025L	WNL-01S	5	8 x 27	57,5	25
WNL01S.050.10.057.025R	WNL01S.050.10.057.025L	WNL-01S	5	10 x 27	57,5	25
WNL01S.060.10.057.025R	WNL01S.060.10.057.025L	WNL-01S	6	10 x 27	57,5	25
WNL01S.070.10.057.025R	WNL01S.070.10.057.025L	WNL-01S	7	10 x 27	57,5	25
WNL01S.075.10.057.025R	WNL01S.075.10.057.025L	WNL-01S	7,5	10 x 27	57,5	25
WNL01S.080.08.057.025R	WNL01S.080.08.057.025L	WNL-01S	8	8 x 27	57,5	25
WNL01S.080.10.057.025R	WNL01S.080.10.057.025L	WNL-01S	8	10 x 27	57,5	25
WNL01S.082.08.057.025R	WNL01S.082.08.057.025L	WNL-01S	8,2	8 x 27	57,5	25
WNL01S.082.10.057.025R	WNL01S.082.10.057.025L	WNL-01S	8,2	10 x 27	57,5	25
WNL01S.100.08.057.025R	WNL01S.100.08.057.025L	WNL-01S	10	8 x 27	57,5	25
WNL01S.100.10.057.025R	WNL01S.100.10.057.025L	WNL-01S	10	10 x 27	57,5	25
WNL01S.120.10.057.025R	WNL01S.120.10.057.025L	WNL-01S	12	10 x 27	57,5	25

H=32 mm L=57,5 mm

SUPER FINISH

Catalogue number R	Catalogue number L	Type	D mm	d x a mm	L mm	H mm
WNL01S.050.10.057.032R	WNL01S.050.10.057.032L	WNL-01S	5	10 x 20	57,5	32
WNL01S.055.10.057.032R	WNL01S.055.10.057.032L	WNL-01S	5,5	10 x 20	57,5	32
WNL01S.060.10.057.032R	WNL01S.060.10.057.032L	WNL-01S	6	10 x 20	57,5	32
WNL01S.065.10.057.032R	WNL01S.065.10.057.032L	WNL-01S	6,5	10 x 20	57,5	32
WNL01S.070.10.057.032R	WNL01S.070.10.057.032L	WNL-01S	7	10 x 20	57,5	32
WNL01S.075.10.057.032R	WNL01S.075.10.057.032L	WNL-01S	7,5	10 x 20	57,5	32
WNL01S.080.10.057.032R	WNL01S.080.10.057.032L	WNL-01S	8	10 x 20	57,5	32
WNL01S.082.10.057.032R	WNL01S.082.10.057.032L	WNL-01S	8,2	10 x 20	57,5	32
WNL01S.100.10.057.032R	WNL01S.100.10.057.032L	WNL-01S	10	10 x 20	57,5	32
WNL01S.120.10.057.032R	WNL01S.120.10.057.032L	WNL-01S	12	10 x 20	57,5	32

H=38 mm L=70 mm

SUPER FINISH

Catalogue number R	Catalogue number L	Type	D mm	d x a mm	L mm	H mm
WNL01S.050.08.070.038R	WNL01S.050.08.070.038L	WNL-01S	5	8 x 27	70	38
WNL01S.050.10.070.038R	WNL01S.050.10.070.038L	WNL-01S	5	10 x 27	70	38
WNL01S.055.08.070.038R	WNL01S.055.08.070.038L	WNL-01S	5,5	8 x 27	70	38
WNL01S.055.10.070.038R	WNL01S.055.10.070.038L	WNL-01S	5,5	10 x 27	70	38
WNL01S.060.08.070.038R	WNL01S.060.08.070.038L	WNL-01S	6	8 x 27	70	38
WNL01S.060.10.070.038R	WNL01S.060.10.070.038L	WNL-01S	6	10 x 27	70	38
WNL01S.065.10.070.038R	WNL01S.065.10.070.038L	WNL-01S	6,5	10 x 27	70	38
WNL01S.070.10.070.038R	WNL01S.070.10.070.038L	WNL-01S	7	10 x 27	70	38
WNL01S.075.10.070.038R	WNL01S.075.10.070.038L	WNL-01S	7,5	10 x 27	70	38
WNL01S.080.08.070.038R	WNL01S.080.08.070.038L	WNL-01S	8	8 x 27	70	38
WNL01S.080.10.070.038R	WNL01S.080.10.070.038L	WNL-01S	8	10 x 27	70	38
WNL01S.082.08.070.038R	WNL01S.082.08.070.038L	WNL-01S	8,2	8 x 27	70	38
WNL01S.082.10.070.038R	WNL01S.082.10.070.038L	WNL-01S	8,2	10 x 27	70	38
WNL01S.085.10.070.038R	WNL01S.085.10.070.038L	WNL-01S	8,5	10 x 27	70	38
WNL01S.090.10.070.038R	WNL01S.090.10.070.038L	WNL-01S	9	10 x 27	70	38
WNL01S.100.08.070.038R	WNL01S.100.08.070.038L	WNL-01S	10	8 x 27	70	38
WNL01S.100.10.070.038R	WNL01S.100.10.070.038L	WNL-01S	10	10 x 27	70	38
WNL01S.110.10.070.038R	WNL01S.110.10.070.038L	WNL-01S	11	10 x 27	70	38
WNL01S.120.10.070.038R	WNL01S.120.10.070.038L	WNL-01S	12	10 x 27	70	38

SUPER FINISH

L=70 mm

H=45 mm

Catalogue number R	Catalogue number L	Type	D mm	d x a mm	L mm	H mm
WNL01S.050.10.070.045R	WNL01S.050.10.070.045L	WNL-01S	5	10 x 20	70	45
WNL01S.055.10.070.045R	WNL01S.055.10.070.045L	WNL-01S	5,5	10 x 20	70	45
WNL01S.060.08.070.045R	WNL01S.060.08.070.045L	WNL-01S	6	8 x 20	70	45
WNL01S.060.10.070.045R	WNL01S.060.10.070.045L	WNL-01S	6	10 x 20	70	45
WNL01S.065.10.070.045R	WNL01S.065.10.070.045L	WNL-01S	6,5	10 x 20	70	45
WNL01S.070.10.070.045R	WNL01S.070.10.070.045L	WNL-01S	7	10 x 20	70	45
WNL01S.075.10.070.045R	WNL01S.075.10.070.045L	WNL-01S	7,5	10 x 20	70	45
WNL01S.080.08.070.045R	WNL01S.080.08.070.045L	WNL-01S	8	8 x 20	70	45
WNL01S.080.10.070.045R	WNL01S.080.10.070.045L	WNL-01S	8	10 x 20	70	45
WNL01S.082.10.070.045R	WNL01S.082.10.070.045L	WNL-01S	8,2	10 x 20	70	45
WNL01S.085.10.070.045R	WNL01S.085.10.070.045L	WNL-01S	8,5	10 x 20	70	45
WNL01S.090.10.070.045R	WNL01S.090.10.070.045L	WNL-01S	9	10 x 20	70	45
WNL01S.100.10.070.045R	WNL01S.100.10.070.045L	WNL-01S	10	10 x 20	70	45
WNL01S.110.10.070.045R	WNL01S.110.10.070.045L	WNL-01S	11	10 x 20	70	45
WNL01S.120.10.070.045R	WNL01S.120.10.070.045L	WNL-01S	12	10 x 20	70	45



WNL-02S

Dowel drills with HM tip, double helix line and Superfinish geometry, type WNL-02S designed for professional and precise machining of wood and wood based materials as chipboard, laminated board, MDF, HDF and others as well as various type of board covered in paper, foil, veneer etc. for use on multi-spindle drilling machines.

Type of work: dowel drilling.

Material: wood and glued wood, plywood, chipboard, MDF, HDF and similar, laminated board, board covered in paper, foil, veneer.

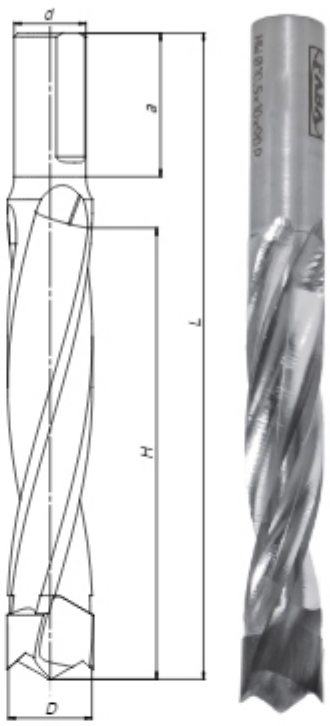







H=55 mm L=90 mm



Catalogue number R	Catalogue number L	Type	D mm	d x a mm	L mm	H mm
WNL02S.050.10.090.055R	WNL02S.050.10.090.055L	WNL-02S	5	10 x 27	90	55
WNL02S.060.10.090.055R	WNL02S.060.10.090.055L	WNL-02S	6	10 x 27	90	55
WNL02S.070.10.090.055R	WNL02S.070.10.090.055L	WNL-02S	7	10 x 27	90	55
WNL02S.075.10.090.055R	WNL02S.075.10.090.055L	WNL-02S	7,5	10 x 27	90	55
WNL02S.080.10.090.055R	WNL02S.080.10.090.055L	WNL-02S	8	10 x 27	90	55

H=65 mm L=90 mm



Catalogue number R	Catalogue number L	Type	D mm	d x a mm	L mm	H mm
WNL02S.050.10.090.065R	WNL02S.050.10.090.065L	WNL-02S	5	10 x 20	90	65
WNL02S.060.10.090.065R	WNL02S.060.10.090.065L	WNL-02S	6	10 x 20	90	65
WNL02S.070.10.090.065R	WNL02S.070.10.090.065L	WNL-02S	7	10 x 20	90	65
WNL02S.080.10.090.065R	WNL02S.080.10.090.065L	WNL-02S	8	10 x 20	90	65
WNL02S.100.10.090.065R	WNL02S.100.10.090.065L	WNL-02S	10	10 x 20	90	65
WNL02S.120.10.090.065R	WNL02S.120.10.090.065L	WNL-02S	12	10 x 20	90	65

For „+" minimum order 10 pcs

WNM-01S

Dowel monolith HM drills with increased life (LongLife) and SuperFinish geometry, type WNM-01S designed for professional and precise machining of wood and wood based materials as chipboard, laminated board, MDF, HDF and others as well as various type of board covered in paper, foil, veneer etc. for use on multi-spindle drilling machines. It is a group of drills with HM core which significantly increases the working part stiffness, resulting in longer and stable work. Special SuperFinish geometry and manufacturing precision guarantee higher work efficiency and blade life.

Type of work: dowel drilling.

Material: wood and glued wood, plywood, chipboard, MDF, HDF and similar, laminated board, board covered in paper, foil, veneer.

SUPER FINISH LONG LIFE

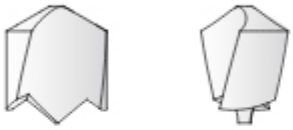

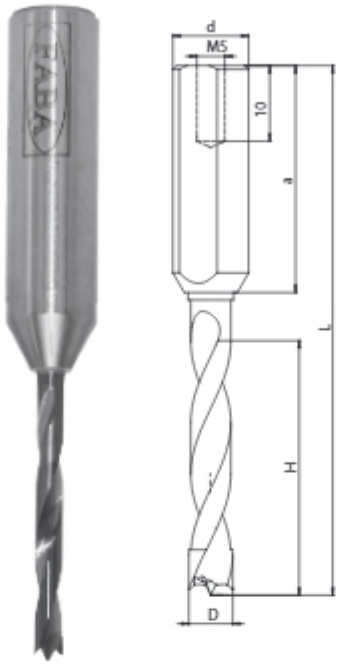

MDF

HM MONOLIT

7

SUPER FINISH LONG LIFE

L=57,5 mm H=15 mm

Catalogue number R	Catalogue number L	Type	D mm	d x a mm	L mm	H mm
WNM01S.030.10.057.015R	WNM01S.030.10.057.015L	WNM-01S	3	10 x 39	57,5	15
WNM01S.035.10.057.015R	WNM01S.035.10.057.015L	WNM-01S	3,5	10 x 39	57,5	15

SUPER FINISH LONG LIFE

L=57,5 mm H=24 mm

Catalogue number R	Catalogue number L	Type	D mm	d x a mm	L mm	H mm
WNM01S.030.10.057.024R	WNM01S.030.10.057.024L	WNM-01S	3	10 x 30	57,5	24
WNM01S.040.10.057.024R	WNM01S.040.10.057.024L	WNM-01S	4	10 x 30	57,5	24
WNM01S.045.10.057.024R	WNM01S.045.10.057.024L	WNM-01S	4,5	10 x 30	57,5	24
WNM01S.050.08.057.024R	WNM01S.050.08.057.024L	WNM-01S	5	8 x 30	57,5	24
WNM01S.050.10.057.024R	WNM01S.050.10.057.024L	WNM-01S	5	10 x 30	57,5	24
WNM01S.055.10.057.024R	WNM01S.055.10.057.024L	WNM-01S	5,5	10 x 30	57,5	24
WNM01S.060.10.057.024R	WNM01S.060.10.057.024L	WNM-01S	6	10 x 30	57,5	24
WNM01S.065.10.057.024R	WNM01S.065.10.057.024L	WNM-01S	6,5	10 x 30	57,5	24
WNM01S.070.10.057.024R	WNM01S.070.10.057.024L	WNM-01S	7	10 x 30	57,5	24
WNM01S.080.08.057.024R	WNM01S.080.08.057.024L	WNM-01S	8	8 x 30	57,5	24
WNM01S.080.10.057.024R	WNM01S.080.10.057.024L	WNM-01S	8	10 x 30	57,5	24
WNM01S.100.10.057.024R	WNM01S.100.10.057.024L	WNM-01S	10	10 x 30	57,5	24

H=34 mm L=57,5 mm

Catalogue number R	Catalogue number L	Type	D mm	d x a mm	L mm	H mm
WNM01S.030.10.057.034R	WNM01S.030.10.057.034L	WNM-01S	3	10 x 20	57,5	34
WNM01S.035.10.057.034R	WNM01S.035.10.057.034L	WNM-01S	3,5	10 x 20	57,5	34
WNM01S.040.10.057.034R	WNM01S.040.10.057.034L	WNM-01S	4	10 x 20	57,5	34
WNM01S.045.10.057.034R	WNM01S.045.10.057.034L	WNM-01S	4,5	10 x 20	57,5	34
WNM01S.050.10.057.034R	WNM01S.050.10.057.034L	WNM-01S	5	10 x 20	57,5	34
WNM01S.055.10.057.034R	WNM01S.055.10.057.034L	WNM-01S	5,5	10 x 20	57,5	34
WNM01S.060.10.057.034R	WNM01S.060.10.057.034L	WNM-01S	6	10 x 20	57,5	34
WNM01S.065.10.057.034R	WNM01S.065.10.057.034L	WNM-01S	6,5	10 x 20	57,5	34
WNM01S.070.10.057.034R	WNM01S.070.10.057.034L	WNM-01S	7	10 x 20	57,5	34
WNM01S.075.10.057.034R	WNM01S.075.10.057.034L	WNM-01S	7,5	10 x 20	57,5	34
WNM01S.080.10.057.034R	WNM01S.080.10.057.034L	WNM-01S	8	10 x 20	57,5	34
WNM01S.100.10.057.034R	WNM01S.100.10.057.034L	WNM-01S	10	10 x 20	57,5	34

H=28 mm L=70 mm

Catalogue number R	Catalogue number L	Type	D mm	d x a mm	L mm	H mm
WNM01S.030.10.070.028R	WNM01S.030.10.070.028L	WNM-01S	3	10 x 39	70	28

H=35 mm L=70 mm

Catalogue number R	Catalogue number L	Type	D mm	d x a mm	L mm	H mm
WNM01S.030.10.070.035R	WNM01S.030.10.070.035L	WNM-01S	3	10 x 30	70	35
WNM01S.035.10.070.035R	WNM01S.035.10.070.035L	WNM-01S	3,5	10 x 30	70	35
WNM01S.040.10.070.035R	WNM01S.040.10.070.035L	WNM-01S	4	10 x 30	70	35
WNM01S.045.10.070.035R	WNM01S.045.10.070.035L	WNM-01S	4,5	10 x 30	70	35
WNM01S.050.08.070.035R	WNM01S.050.08.070.035L	WNM-01S	5	8 x 30	70	35
WNM01S.050.10.070.035R	WNM01S.050.10.070.035L	WNM-01S	5	10 x 30	70	35
WNM01S.055.08.070.035R	WNM01S.055.08.070.035L	WNM-01S	5,5	8 x 30	70	35
WNM01S.055.10.070.035R	WNM01S.055.10.070.035L	WNM-01S	5,5	10 x 30	70	35
WNM01S.060.08.070.035R	WNM01S.060.08.070.035L	WNM-01S	6	8 x 30	70	35
WNM01S.060.10.070.035R	WNM01S.060.10.070.035L	WNM-01S	6	10 x 30	70	35
WNM01S.065.10.070.035R	WNM01S.065.10.070.035L	WNM-01S	6,5	10 x 30	70	35
WNM01S.070.10.070.035R	WNM01S.070.10.070.035L	WNM-01S	7	10 x 30	70	35
WNM01S.075.10.070.035R	WNM01S.075.10.070.035L	WNM-01S	7,5	10 x 30	70	35
WNM01S.080.08.070.035R	WNM01S.080.08.070.035L	WNM-01S	8	8 x 30	70	35
WNM01S.080.10.070.035R	WNM01S.080.10.070.035L	WNM-01S	8	10 x 30	70	35
WNM01S.100.10.070.035R	WNM01S.100.10.070.035L	WNM-01S	10	10 x 30	70	35

Dowel drills SuperFinish Long Life

SUPER FINISH LONG LIFE

L=70 mm H=45 mm

Catalogue number R	Catalogue number L	Type	D mm	dxa mm	L mm	H mm
WNM01S.030.10.070.045R	WNM01S.030.10.070.045L	WNM-01S	3	10 x 20	70	45
WNM01S.035.10.070.045R	WNM01S.035.10.070.045L	WNM-01S	3,5	10 x 20	70	45
WNM01S.040.10.070.045R	WNM01S.040.10.070.045L	WNM-01S	4	10 x 20	70	45
WNM01S.045.10.070.045R	WNM01S.045.10.070.045L	WNM-01S	4,5	10 x 20	70	45
WNM01S.050.10.070.045R	WNM01S.050.10.070.045L	WNM-01S	5	10 x 20	70	45
WNM01S.055.10.070.045R	WNM01S.055.10.070.045L	WNM-01S	5,5	10 x 20	70	45
WNM01S.060.10.070.045R	WNM01S.060.10.070.045L	WNM-01S	6	10 x 20	70	45
WNM01S.065.10.070.045R	WNM01S.065.10.070.045L	WNM-01S	6,5	10 x 20	70	45
WNM01S.070.10.070.045R	WNM01S.070.10.070.045L	WNM-01S	7	10 x 20	70	45
WNM01S.075.10.070.045R	WNM01S.075.10.070.045L	WNM-01S	7,5	10 x 20	70	45
WNM01S.080.10.070.045R	WNM01S.080.10.070.045L	WNM-01S	8	10 x 20	70	45
WNM01S.100.10.070.045R	WNM01S.100.10.070.045L	WNM-01S	10	10 x 20	70	45

SUPER FINISH LONG LIFE

L=77 mm H=45 mm

Catalogue number R	Catalogue number L	Type	D mm	dxa mm	L mm	H mm
WNM01S.050.10.077.045R	WNM01S.050.10.077.045L	WNM-01S	5	10 x 30	77	45
WNM01S.055.10.077.045R	WNM01S.055.10.077.045L	WNM-01S	5,5	10 x 30	77	45
WNM01S.060.10.077.045R	WNM01S.060.10.077.045L	WNM-01S	6	10 x 30	77	45
WNM01S.070.10.077.045R	WNM01S.070.10.077.045L	WNM-01S	7	10 x 30	77	45
WNM01S.080.10.077.045R	WNM01S.080.10.077.045L	WNM-01S	8	10 x 30	77	45

SUPER FINISH LONG LIFE

L=90 mm H=55 mm

Catalogue number R	Catalogue number L	Type	D mm	dxa mm	L mm	H mm
WNM01S.050.10.090.055R	WNM01S.050.10.090.055L	WNM-01S	5	10 x 30	90	55
WNM01S.055.10.090.055R	WNM01S.055.10.090.055L	WNM-01S	5,5	10 x 30	90	55
WNM01S.060.10.090.055R	WNM01S.060.10.090.055L	WNM-01S	6	10 x 30	90	55
WNM01S.070.10.090.055R	WNM01S.070.10.090.055L	WNM-01S	7	10 x 30	90	55
WNM01S.080.10.090.055R	WNM01S.080.10.090.055L	WNM-01S	8	10 x 30	90	55

SUPER FINISH LONG LIFE

L=90 mm H=65 mm

Catalogue number R	Catalogue number L	Type	D mm	dxa mm	L mm	H mm
WNM01S.050.10.090.065R	WNM01S.050.10.090.065L	WNM-01S	5	10 x 20	90	65
WNM01S.055.10.090.065R	WNM01S.055.10.090.065L	WNM-01S	5,5	10 x 20	90	65
WNM01S.060.10.090.065R	WNM01S.060.10.090.065L	WNM-01S	6	10 x 20	90	65
WNM01S.070.10.090.065R	WNM01S.070.10.090.065L	WNM-01S	7	10 x 20	90	65
WNM01S.080.10.090.065R	WNM01S.080.10.090.065L	WNM-01S	8	10 x 30	90	65

Type	WPL-01	WPL-01S	WPM-01S
Series	☆☆☆ PROFESSIONAL DRILLS	☆☆☆☆ SUPER FINISH	☆☆☆☆☆ SUPER FINISH LONG LIFE
Drill			
Material	☆☆☆ Wood and glued wood ☆☆ MDF, HDF and similar materials ☆ Laminated board * Board covered with foil, paper and veneer	☆☆☆☆ Wood and glued wood ☆☆☆☆ MDF, HDF and similar materials ☆☆☆☆ Laminated board ☆☆☆☆ Board covered with foil, paper and veneer	☆☆☆☆☆ Wood and glued wood ☆☆☆☆☆ MDF, HDF and similar materials ☆☆☆☆☆ Laminated board ☆☆☆☆☆ Board covered with foil, paper and veneer
Geometry			
Description	Professional through drills with HM tip, type WPL-01.Standard brazed HM drills, the most economical solution, designed for professional machining of wood and wood based materials. Recommended for wood, glued wood and plywood. If high quality hole finishing is not necessary, they can be used for making holes in chipboard, MDF, HDF and similar.	Through drills with HM tip and SuperFinish geometry, type WPL-01S. Brazed HM drills with SuperFinish geometry is an optimal solution for clean and tear out free drilling in wood and wood based materials as chipboard, laminated board MDF, HDF and similar as well as various type of board covered in paper, foil, veneer etc.	Through monolith HM drills with increased life (LongLife) and SuperFinish geometry, type WPM--01S designed for professional and precise machining of wood and wood based materials as chipboard, laminated board, MDF, HDF and others as well as various type of board covered in paper, foil, veneer etc. for use on multi-spindle drilling machines. It is a group of drills with HM core which significantly increases the working part stiffness, resulting in longer and stable work. Special SuperFinish geometry and manufacturing precision guarantee higher work efficiency and blade life.

Solution: * - not recommended ☆ - acceptable ☆☆ - good ☆☆☆ - very good ☆☆☆☆ - optimal ☆☆☆☆☆ - perfect

Through drills Professional

WPL-01

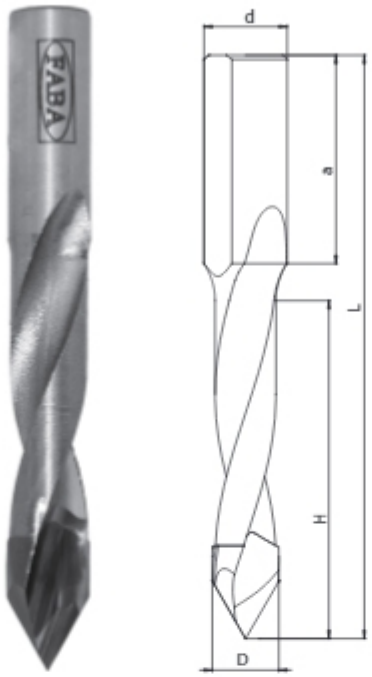

Professional through drills with HM tip, type WPL-01, designed for professional machining of wood and wood based materials such chipboard, MDF and others, for use on multi--spindle drilling machines.
Standard brazed HM drills, recommended for wood, glued wood and plywood.

Type of work: through drilling.

Material: wood and glued wood, plywood, chipboard, MDF, HDF and similar.

PROFESSIONAL DRILLS







7

PROFESSIONAL DRILLS

L=70 mm

H=40 mm

Catalogue number R	Catalogue number L	Type	D mm	d x a mm	L mm	H mm
WPL01.050.10.070.040R	WPL01.050.10.070.040L	WPL-01	5	10 x 25	70	40
WPL01.055.10.070.040R	WPL01.055.10.070.040L	WPL-01	5,5	10 x 25	70	40
WPL01.060.10.070.040R	WPL01.060.10.070.040L	WPL-01	6	10 x 25	70	40
WPL01.065.10.070.040R	WPL01.065.10.070.040L	WPL-01	6,5	10 x 25	70	40
WPL01.070.10.070.040R	WPL01.070.10.070.040L	WPL-01	7	10 x 25	70	40
WPL01.075.10.070.040R	WPL01.075.10.070.040L	WPL-01	7,5	10 x 25	70	40
WPL01.080.10.070.040R	WPL01.080.10.070.040L	WPL-01	8	10 x 25	70	40
WPL01.090.10.070.040R	WPL01.090.10.070.040L	WPL-01	9	10 x 25	70	40
WPL01.100.10.070.040R	WPL01.100.10.070.040L	WPL-01	10	10 x 25	70	40
WPL01.110.10.070.040R	WPL01.110.10.070.040L	WPL-01	11	10 x 25	70	40
WPL01.120.10.070.040R	WPL01.120.10.070.040L	WPL-01	12	10 x 25	70	40

For „+" minimum order: 1) 50 pcs (D<10) 2) 30 pcs (D≥10)

WPL-01S

Through drills with HM tip and SuperFinish geometry, type WPL-01S, designed for professional and precise machining of wood and wood based materials as chipboard, laminated board, MDF, HDF and others as well as various type of board covered in paper, foil, veneer etc. for use on multi-spindle drilling machines.

Type of work: dowel drilling.

Material: wood and glued wood, plywood, chipboard, MDF, HDF and similar, laminated board, board covered in paper, foil, veneer.

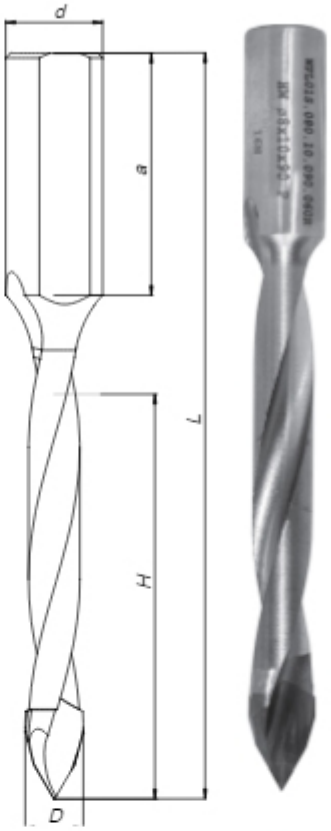







7

H=40 mm

L=70 mm



Catalogue number R	Catalogue number L	Type	D mm	d x a mm	L mm	H mm
WPL01S.050.08.070.040R	WPL01S.050.08.070.040L	WPL-01S	5	8 x 25	70	40
WPL01S.050.10.070.040R	WPL01S.050.10.070.040L	WPL-01S	5	10 x 25	70	40
WPL01S.055.10.070.040R	WPL01S.055.10.070.040L	WPL-01S	5,5	10 x 25	70	40
WPL01S.060.08.070.040R	WPL01S.060.08.070.040L	WPL-01S	6	8 x 25	70	40
WPL01S.060.10.070.040R	WPL01S.060.10.070.040L	WPL-01S	6	10 x 25	70	40
WPL01S.065.10.070.040R	WPL01S.065.10.070.040L	WPL-01S	6,5	10 x 25	70	40
WPL01S.070.08.070.040R	WPL01S.070.08.070.040L	WPL-01S	7	8 x 25	70	40
WPL01S.070.10.070.040R	WPL01S.070.10.070.040L	WPL-01S	7	10 x 25	70	40
WPL01S.075.10.070.040R	WPL01S.075.10.070.040L	WPL-01S	7,5	10 x 25	70	40
WPL01S.080.08.070.040R	WPL01S.080.08.070.040L	WPL-01S	8	8 x 25	70	40
WPL01S.080.10.070.040R	WPL01S.080.10.070.040L	WPL-01S	8	10 x 25	70	40
WPL01S.090.10.070.040R	WPL01S.090.10.070.040L	WPL-01S	9	10 x 26	70	40
WPL01S.100.10.070.040R	WPL01S.100.10.070.040L	WPL-01S	10	10 x 25	70	40
WPL01S.110.10.070.040R	WPL01S.110.10.070.040L	WPL-01S	11	10 x 26	70	40
WPL01S.120.10.070.040R	WPL01S.120.10.070.040L	WPL-01S	12	10 x 25	70	40

SUPER FINISH

L=77 mm H=50 mm

Catalogue number R	Catalogue number L	Type	D mm	d x a mm	L mm	H mm
WPL01S.050.10.077.050R	WPL01S.050.10.077.050L	WPL-01S	5	10 x 20	77	50
WPL01S.055.10.077.050R	WPL01S.055.10.077.050L	WPL-01S	5,5	10 x 20	77	50
WPL01S.060.10.077.050R	WPL01S.060.10.077.050L	WPL-01S	6	10 x 20	77	50
WPL01S.070.10.077.050R	WPL01S.070.10.077.050L	WPL-01S	7	10 x 20	77	50
WPL01S.080.10.077.050R	WPL01S.080.10.077.050L	WPL-01S	8	10 x 20	77	50
WPL01S.090.10.077.050R	WPL01S.090.10.077.050L	WPL-01S	9	10 x 20	77	50
WPL01S.100.10.077.050R	WPL01S.100.10.077.050L	WPL-01S	10	10 x 20	77	50
WPL01S.120.10.077.050R	WPL01S.120.10.077.050L	WPL-01S	12	10 x 20	77	50

SUPER FINISH

L=90 mm H=60 mm

Catalogue number R	Catalogue number L	Type	D mm	d x a mm	L mm	H mm
WPL01S.050.10.090.060R	WPL01S.050.10.090.060L	WPL-01S	5	10 x 25	90	60
WPL01S.060.10.090.060R	WPL01S.060.10.090.060L	WPL-01S	6	10 x 25	90	60
WPL01S.070.10.090.060R	WPL01S.070.10.090.060L	WPL-01S	7	10 x 25	90	60
WPL01S.080.10.090.060R	WPL01S.080.10.090.060L	WPL-01S	8	10 x 25	90	60
WPL01S.090.10.090.060R	WPL01S.090.10.090.060L	WPL-01S	9	10 x 25	90	60
WPL01S.100.10.090.060R	WPL01S.100.10.090.060L	WPL-01S	10	10 x 25	90	60
WPL01S.120.10.090.060R	WPL01S.120.10.090.060L	WPL-01S	12	10 x 25	90	60

SUPER FINISH

L=90 mm H=65 mm

Catalogue number R	Catalogue number L	Type	D mm	d x a mm	L mm	H mm
WPL01S.050.10.090.065R	WPL01S.050.10.090.065L	WPL-01S	5	10 x 20	90	65
WPL01S.060.10.090.065R	WPL01S.060.10.090.065L	WPL-01S	6	10 x 20	90	65
WPL01S.070.10.090.065R	WPL01S.070.10.090.065L	WPL-01S	7	10 x 20	90	65
WPL01S.080.10.090.065R	WPL01S.080.10.090.065L	WPL-01S	8	10 x 20	90	65
WPL01S.090.10.090.065R	WPL01S.090.10.090.065L	WPL-01S	9	10 x 20	90	65
WPL01S.100.10.090.065R	WPL01S.100.10.090.065L	WPL-01S	10	10 x 20	90	65
WPL01S.120.10.090.065R	WPL01S.120.10.090.065L	WPL-01S	12	10 x 20	90	65

For „+" minimum order 10 pcs

WPM-01S

Through monolith HM drills with increased life, type WPM--01S. SuperFinish and LongLife are drills with full carbide core (the whole working part is a carbide monolith) and SuperFinish geometry. A perfect solution for clean and tear out free drilling in wood and wood based materials as chipboard, laminated board, MDF, HDF and similar as well as various type of board covered in paper, foil, veneer etc.

Type of work: dowel drilling.

Material: wood and glued wood, plywood, chipboard, MDF, HDF and similar, laminated board, board covered in paper, foil, veneer.







H=28 mm / H=35 mm — L=70 mm

SUPER FINISH LONG LIFE

Catalogue number R	Catalogue number L	Type	D mm	dxa mm	L mm	H mm
WPM01S.030.10.070.028R	WPM01S.030.10.070.028L	WPM-01S	3	10 x 39	70	28
WPM01S.030.10.070.035R	WPM01S.030.10.070.035L	WPM-01S	3	10 x 30	70	35
WPM01S.040.10.070.035R	WPM01S.040.10.070.035L	WPM-01S	4	10 x 30	70	35
WPM01S.045.10.070.035R	WPM01S.045.10.070.035L	WPM-01S	4,5	10 x 30	70	35
WPM01S.050.10.070.035R	WPM01S.050.10.070.035L	WPM-01S	5	10 x 30	70	35
WPM01S.055.10.070.035R	WPM01S.055.10.070.035L	WPM-01S	5,5	10 x 30	70	35
WPM01S.060.10.070.035R	WPM01S.060.10.070.035L	WPM-01S	6	10 x 30	70	35
WPM01S.065.10.070.035R	WPM01S.065.10.070.035L	WPM-01S	6,5	10 x 30	70	35
WPM01S.070.10.070.035R	WPM01S.070.10.070.035L	WPM-01S	7	10 x 30	70	35
WPM01S.075.10.070.035R	WPM01S.075.10.070.035L	WPM-01S	7,5	10 x 30	70	35
WPM01S.080.10.070.035R	WPM01S.080.10.070.035L	WPM-01S	8	10 x 30	70	35

H=45 mm — L=70 mm

SUPER FINISH LONG LIFE

Catalogue number R	Catalogue number L	Type	D mm	dxa mm	L mm	H mm
WPM01S.030.10.070.045R	WPM01S.030.10.070.045L	WPM-01S	3	10 x 20	70	45
WPM01S.040.10.070.045R	WPM01S.040.10.070.045L	WPM-01S	4	10 x 20	70	45
WPM01S.045.10.070.045R	WPM01S.045.10.070.045L	WPM-01S	4,5	10 x 20	70	45
WPM01S.050.10.070.045R	WPM01S.050.10.070.045L	WPM-01S	5	10 x 20	70	45
WPM01S.055.10.070.045R	WPM01S.055.10.070.045L	WPM-01S	5,5	10 x 20	70	45
WPM01S.060.10.070.045R	WPM01S.060.10.070.045L	WPM-01S	6	10 x 20	70	45
WPM01S.070.10.070.045R	WPM01S.070.10.070.045L	WPM-01S	7	10 x 20	70	45
WPM01S.080.10.070.045R	WPM01S.080.10.070.045L	WPM-01S	8	10 x 20	70	45

Cutter heads with exchangeable inserts

TW-301 right

Cylinder boring bits with HM tip, type **TW-301** (right) designed for making holes for box hinges in wood and wood-based materials as chipboard, laminated board, MDF and others.

Type of work: dowel drilling.

Material: wood and glued wood, chipboard, MDF and similar materials.

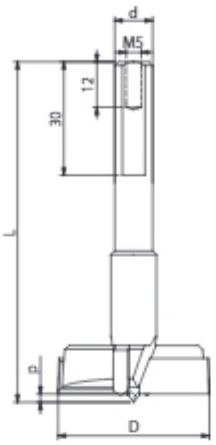

Catalogue number	Type	D mm	L mm	d mm	p mm		n_{max}	
W0100080	TW-301	15	57	8	1,5	R	9000	•
W0100001	TW-301	15	57	10	1,5	R	9000	•
W0100067	TW-301	15	70	10	1,5	R	9000	•
W0100307	TW-301	15	90	10	1,5	R	9000	+
W0100002	TW-301	16	57	10	1,5	R	9000	•
W0100003	TW-301	17	57	10	1,5	R	9000	+
W0100004	TW-301	18	57	10	1,5	R	9000	•
W0100005	TW-301	19	57	10	1,5	R	9000	•
W0100081	TW-301	20	57	8	1,5	R	9000	•
W0100006	TW-301	20	57	10	1,5	R	9000	•
W0100082	TW-301	20	70	10	1,5	R	9000	•
W0100250	TW-301	20	90	10	1,5	R	9000	+
W0100007	TW-301	22	57	10	1,5	R	9000	•
W0100008	TW-301	24	57	10	1,5	R	9000	•
W0100058	TW-301	25	57	8	1,5	R	9000	+
W0100009	TW-301	25	57	10	1,5	R	9000	•
W0100063	TW-301	25	70	10	1,5	R	9000	•
W0100064	TW-301	25	90	10	1,5	R	9000	+
W0100010	TW-301	26	57	10	1,5	R	9000	•
W0100011	TW-301	30	57	10	1,5	R	9000	•
W0100012	TW-301	34	57	10	1,5	R	9000	•
W0100212	TW-301	35	57	8	1,5	R	9000	•
W0100013	TW-301	35	57	10	1,5	R	9000	•
W0100062	TW-301	35	70	10	1,5	R	9000	•
W0100233	TW-301	35	90	10	1,5	R	9000	+
W0100014	TW-301	40	57	10	2,2	R	9000	•
W0100015	TW-301	45	57	10	2,2	R	9000	•
W0100016	TW-301	50	57	10	2,2	R	6000	•
W0100047	TW-301	50	70	10	2,2	R	6000	•
W0100282	TW-301	50	90	10	2,2	R	6000	+
W0100018	TW-301	55	57	10	2,2	R	6000	•
W0100017	TW-301	60	57	10	2,2	R	6000	•

TW-302 left

Cylinder boring bits with HM tip, type **TW-302** (left) designed for making holes for box hinges in wood and wood-based materials as chipboard, laminated board, MDF and others.

Type of work: dowel drilling.

Material: glued wood, chipboard, MDF and similar materials.

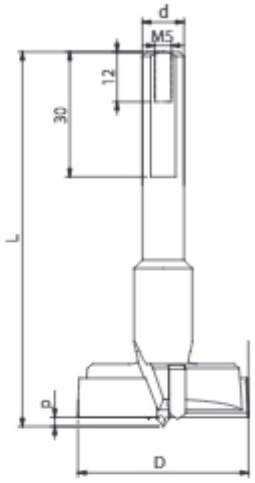





Catalogue number	Type	D mm	L mm	d mm	P mm		n_{max}	
W0200001	TW-302	15	57	10	1,5	L	9000	•
W0200054	TW-302	15	70	10	1,5	L	9000	•
W0200002	TW-302	16	57	10	1,5	L	9000	+
W0200004	TW-302	18	57	10	1,5	L	9000	•
W0200006	TW-302	20	57	10	1,5	L	9000	•
W0200059	TW-302	20	70	10	1,5	L	9000	•
W0200009	TW-302	25	57	10	1,5	L	9000	+
W0200052	TW-302	25	70	10	1,5	L	9000	•
W0200053	TW-302	25	90	10	1,5	L	9000	+
W0200010	TW-302	26	57	10	1,5	L	9000	•
W0200011	TW-302	30	57	10	1,5	L	9000	+
W0200012	TW-302	34	57	10	1,5	L	9000	+
W0200013	TW-302	35	57	10	1,5	L	9000	•
W0200051	TW-302	35	70	10	1,5	L	9000	•
W0200086	TW-302	40	90	10	1,5	L	9000	+

TW-301

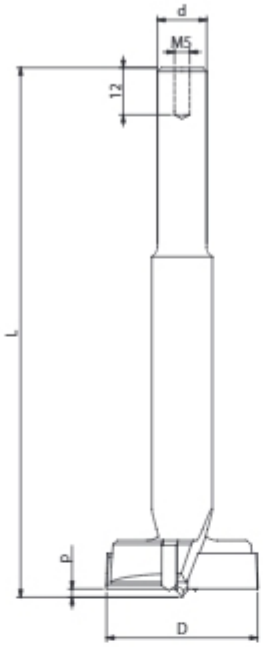

Cylinder boring bits with HM tip, type **TW-301** (right) designed for making holes for box hinges in wood and wood-based materials as chipboard, laminated board, MDF and others.
Boring bits with shank other than d=10 mm are made as standard without the flat part.

Type of work: dowel drilling.

Material: glued wood, chipboard, MDF and similar materials.

Catalogue number	Type	D mm	L mm	d mm	p mm		n_{max}	
W0100388	TW-301	25	140	13	1,5	R	9000	+
W0100147	TW-301	50	140	16	2,2	R	6000	+

We offer the flat part on the shank on customer's request.

TW-301A

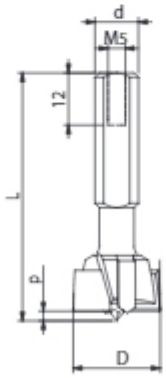

Cylinder boring bits with HM tip and decreased pilot (centering point) height, type **TW-301A** (right) designed for making holes for box hinges in wood and wood-based materials as chipboard, laminated board, MDF and others. Special boring bit construction – decreased pilot height eliminates the risk of ripping the material on the other side of the board, with small material thickness.

Type of work: dowel drilling.

Material: glued wood, chipboard, MDF and similar materials.

Catalogue number	Type	D mm	L mm	d mm	p mm		n_{max}	
W0100336	TW-301A	15	57	10	1	R	9000	•
W0100098	TW-301A	15	70	10	1	R	9000	•

TW-302

Cylinder boring bits with HM tip, type **TW-302** (left) designed for making holes for box hinges in wood and wood-based materials as chipboard, laminated board, MDF and others.
Drills with shank other than d=10 mm are made as standard without the flat part.

Type of work: dowel drilling.

Material: glued wood, chipboard, MDF and similar materials.

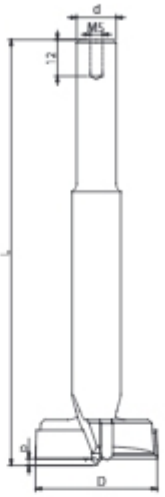





Catalogue number	Type	D mm	L mm	d mm	P mm		n_{max}	
W0200140	TW-302	40	140	13	2,2	L	9000	+

We offer the flat part on the shank on customer's request.

TW-302A

Cylinder boring bits with HM tip and decreased pilot (centering point) height, type **TW-302A** (left) designed for making holes for box hinges in wood and wood-based materials as chipboard, laminated board, MDF and others. Special boring bit construction – decreased pilot height eliminates the risk of ripping the material on the other side of the board, with small material thickness.

Type of work: dowel drilling.

Material: glued wood, chipboard, MDF and similar materials.

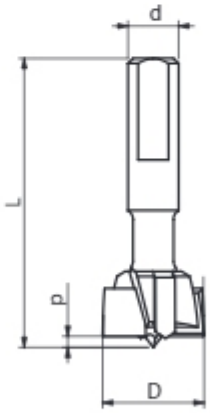





Catalogue number	Type	D mm	L mm	d mm	P mm		n_{max}	
W0200336	TW-302A	15	57	10	1	L	9000	•
W0200098	TW-302A	15	70	10	1	L	9000	•

TW-301C
TW-302C

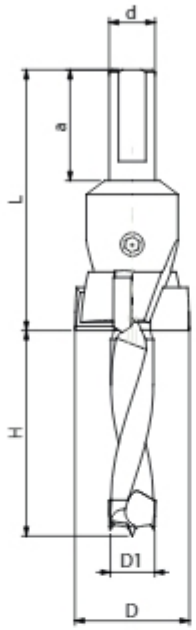

Cylinder boring bits with pilot drill, type **TW-301C** (right) and **TW-302C** (left) designed for making holes for box hinges in wood and wood-based materials as chipboard, laminated board, MDF and others. Special boring bit construction allows for making high quality combined holes in one operation.

Cylinder boring bits with pilot drill are produced only on individual customer's request. We can manufacture, as a component, a pilot drill:

- dowel or through type,
- monolith or with HM tip.

Drills with shank other than d=10 mm are made as standard without the flat part.

Type of work: dowel and through drilling (depending on the component).

Material: glued wood, chipboard, MDF and similar materials.





Catalogue number	Type	D mm	D_1 mm	L mm	d mm	H mm	a		
W0100426	TW-301C	25	10	57	10	45	25	R	+
W0100267	TW-301C	30	7	70	10	30	30	R	+

We offer the flat part on the shank on customer's request.

FTS-30

Cylinder boring cutter heads with exchangeable HM knives, type **FTS-30** designed for making holes for box hinges in wood and wood-based materials as chipboard, laminated board, MDF and others.

Type of work: dowel drilling.

Material: glued wood, chipboard, MDF and similar materials.

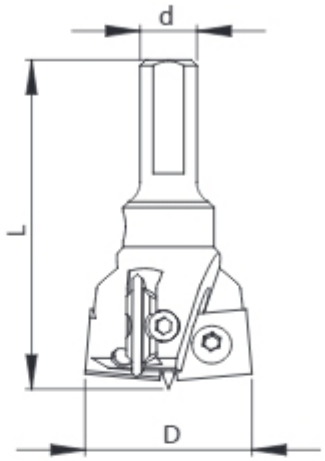

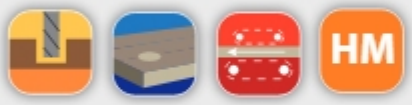

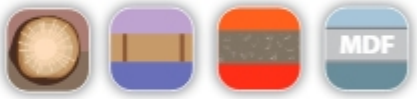

Catalogue number	Type	D mm	L mm	d mm		
FTS.30P2501.01	FTS-30	25	58	10	R	+
FTS.30L2501.01	FTS-30	25	58	10	L	+
FTS.30P2501.02	FTS-30	25	70	10	R	+
FTS.30L2501.02	FTS-30	25	70	10	L	+
FTS.30P2601.01	FTS-30	26	58	10	R	+
FTS.30L2601.01	FTS-30	26	58	10	L	+
FTS.30P2601.02	FTS-30	26	70	10	R	+
FTS.30L2601.02	FTS-30	26	70	10	L	+
FTS.30P3001.01	FTS-30	30	58	10	R	+
FTS.30L3001.01	FTS-30	30	58	10	L	+
FTS.30P3001.02	FTS-30	30	70	10	R	+
FTS.30L3001.02	FTS-30	30	70	10	L	+
FTS.30P3501.01	FTS-30	35	58	10	R	+
FTS.30L3501.01	FTS-30	35	58	10	L	+
FTS.30P3501.02	FTS-30	35	70	10	R	+
FTS.30L3501.02	FTS-30	35	70	10	L	+

Spare parts for cutter heads FTS-30

Cat. nr	Name	Dimensions	Quantity		
	Knife	Bx13,2x2	2		+
N0000726	Spurs	18x6x3,5	2		+
WHAI01602	Pilot	Ø3x33,5	1		+

Cat. nr	Name	Dimensions	Quantity		
WHAS00004	Screw	M4x6	2		•
WHAS00063	Screw	M3,5x6	2		+
WHAW00008	Push screw	M6x6	1		•
WHAS00026	Locating screw	M5x10	1		+

Drill holders

OST-01

Conical drill holder.

For conical drill holders we use push screws M6 x 6 according to DIN 914 standard.

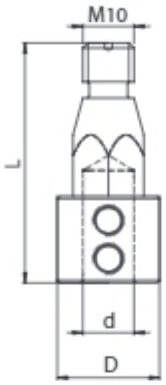

Catalogue number	Type	D mm	d mm	L mm		
U0001001	OST-01	20	10	47	R	•
U0001002	OST-01	20	10	47	L	•

OWA-01

Cylindrical drill holder.

For cylindrical drill holders we use push screws M6 x 6 according to DIN 914 standard.

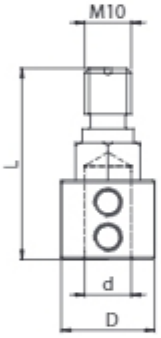

Catalogue number	Type	D mm	d mm	L mm		
U0001003	OWA-01	20	10	41	R	•
U0001004	OWA-01	20	10	41	L	•

OSZ-01

Quick-release drill holder.

For quick-release drill holders we use push screws M6 x 6 according to DIN 553 standard.

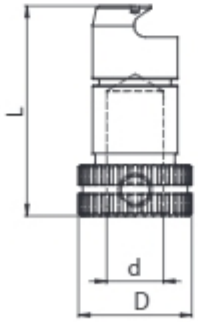

Catalogue number	Type	D mm	d mm	L mm	
U0001005	OSZ-01	20	10	37	•

PG-01

Countersink for drills.

PG-01 countersink is used with drills with brazed HM tips:
- WN-03,
- WN-06,
- WN-07.

The countersink can be mounted on the working part of a drill with double helix line.

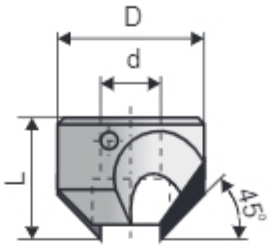

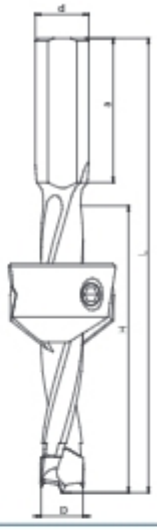

Catalogue number	Type	D mm	d mm	L mm		
K1000001	PG-01	14	4	12	R	+
K1000002	PG-01	14	4	12	L	+
K1000003	PG-01	14	5	12	R	+
K1000004	PG-01	14	5	12	L	+
K1000005	PG-01	16	6	14	R	+
K1000006	PG-01	16	6	14	L	+
K1000007	PG-01	16	7	14	R	+
K1000008	PG-01	16	7	14	L	+
K1000009	PG-01	16	8	16	R	+
K1000010	PG-01	16	8	16	L	+
K1000011	PG-01	20	10	18	R	+
K1000012	PG-01	20	10	18	L	+
K1000013	PG-01	20	12	18	R	+
K1000014	PG-01	20	12	18	L	+

PG-02

Countersink for drills.

PG-02 countersink is used with drills with brazed HM tips:
- WN-01,
- WN-02,
- WN-04,
- WP-01,
- WP-03,
- WP-06.

The countersink can be mounted on the shank of a drill. It is necessary to use a cylindrical shank with the flat part.

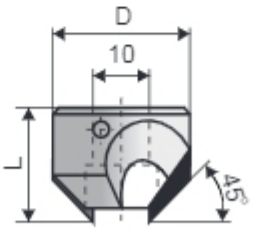



Catalogue number	Type	D mm	d mm	L mm		
K4000001	PG-02	20	4÷10	15	R	+
K4000002	PG-02	20	4÷10	15	L	+
K4000003	PG-02	22	11÷12	16	R	+
K4000004	PG-02	22	11÷12	16	L	+

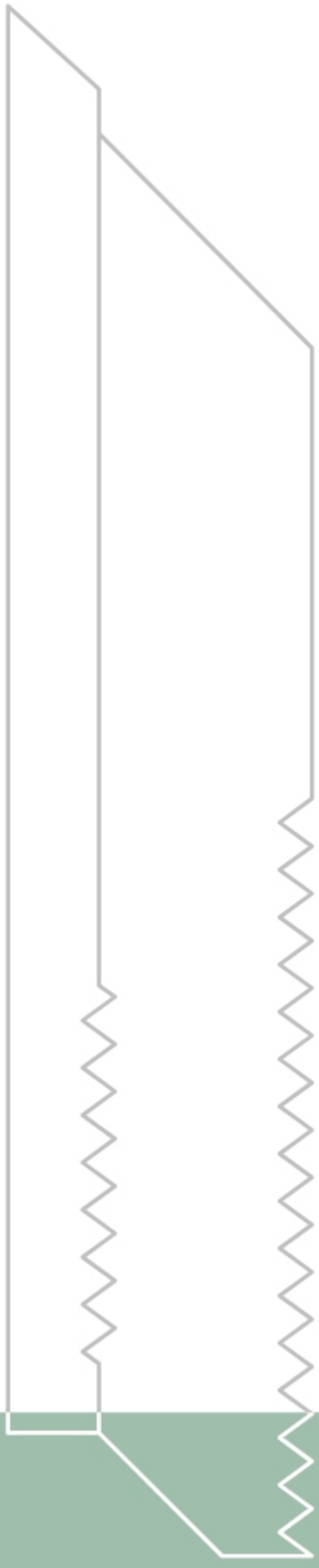



8. Knives, spare parts

Knives, spare parts

Cutting knives from high speed steel (HSS) designed for professional machining of solid soft wood, cutting knives from carbide (HM) designed for professional machining of solid soft and hard wood, glued wood and other wood-based materials. Knives 1100-4H have been improved with high performance coating HP or HX. Properly selected coating, significantly increases (even several times) life of the tool. Knives with HP and HX coating are designed for cutting dry hardwood at temperature up to 200°C (HP) and for cutting wet softwood at temperature up to 300°C (HX). They are used for machining flat surfaces, grooves, rebates and specialist surface and edge profiling

Knives are made from the highest quality high speed cutting steel and carbide in special heat treatment and profiling technology, properly selected for the type of work, parameters and conditions prevailing during the machining, in order to guarantee proper work in cooperation with other tools both in standard and extreme conditions. Knives are offered also in the version combining high speed cutting steel with carbide as in the case of knives 1100-4.

Knives are designed for cutter heads with or without shear angle and optimized chip flow. Very precise tool production and balancing allows for rotation speed up to 24 000 r.p.m.

All types of cutting knives are manufactured on modern CNC machines of world-renowned producers, which guarantee high accuracy and precision of the produced tools. The construction and production remains in accordance with all points of safety standard EN/PN-847-1 concerning tools for mechanical woodworking.

Knives and spare parts chapter includes only examples of knives with basic dimensions. On request, we can suggest and manufacture proper knive for the required type of tool, profile, work, material as well as parameters and conditions during machining. The production time of knives or catalogue components indicated with "+" as well as special ones made on client's request in most cases does not take more than 10-15 working days.

Orders should include:

- tool outer diameter (D) or diameters range,
- HM tip depth (h),
- knife length (B),
- knife height (L),
- knife thickness (b),
- profile depth (G_p),
- type of machined material,
- number of teeth (z) or spindle rotation speed and feed speed.

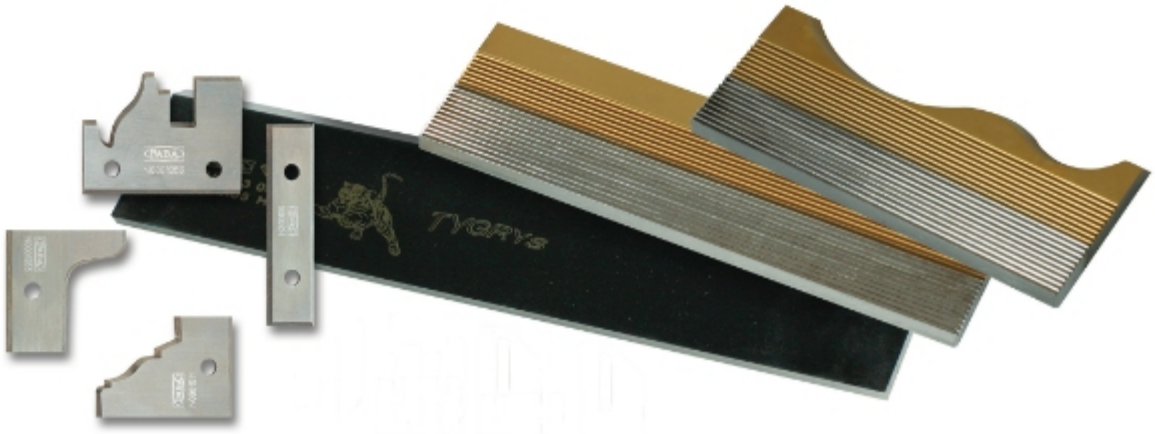

Contents

8.	KNIVES, SPARE PARTS	
	Pictograms	8.3
8.1	Knives for cutter heads	8.4
8.2	Exchangeable inserts	8.9
8.3	Knives for treenails	8.12
8.4	Knives for debarking	8.14
8.5	Knives and inserts	8.15
8.6	Clamping wedges, screws	8.16
8.7	Reduction sleeves	8.19
8.8	Spacer rings	8.20

Pictograms

- solid dry softwood
- solid dry hardwood
- solid wet softwood
- solid wet hardwood
- chipboard
- glued wood
- MDF
- plastics
- high-speed cutting steel
- high-speed cutting steel 18% wolfram
- carbide
- HP coating
- HX coating
- flat surfaces
- grooving
- profiling
- debarking

* available / stock product
\+ production time 9–15 working days.
Minimum order for knives and inserts is agreed individually.

Knives for cutter heads

GP

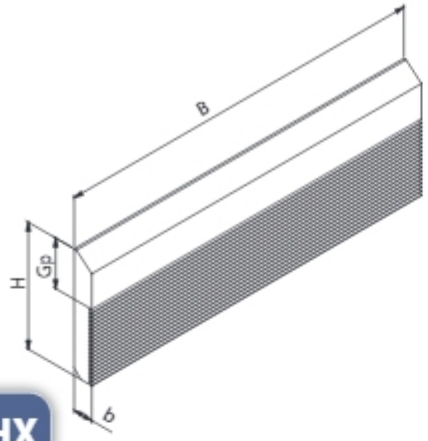



Cutting knife, type **GP-01** or **GP-03** with one cutting edge, designed for professional machining of solid wood. The knife is used for cutting flat surfaces or profiling. Height is regulated by precise serration. The knife is offered also with HP or HX coating.

Type of work: cutting flat surfaces, profiling.

Material:
- HSS solid wood
- HP solid, dry wood, plastics
- HX solid, wet wood, plastics

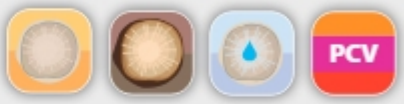

GP-01

D = mm b = mm H = mm Gp $_{max}$ = mm	122 8 40 8		122 8 50 15		122 8 60 25	
B mm	Catalogue number HSS		Catalogue number HSS		Catalogue number HSS	
40			N2050012	•	N2050022	•
50			N2050013	+	N2050023	+
60	N20500004	+	N2050014	•	N2050024	•
80			N2050015	•	N2050025	•
100			N2050016	•	N2050026	•
120			N2050017	•	N2050027	+
150			N2050018	•	N2050028	•
180			N2050019	•	N2050029	+
200			N2050020	+	N2050030	+
320			N2050519	•		

Profiles in knives GP-01 are made only on client's request according to individual pricing.

GP-03

D = mm b = mm H = mm	122 5 40		122 5 40		122 5 40	
B mm	Catalogue number HSS		Catalogue number HP		Catalogue number HX	
60	N2050186	+	N2050186HP	+	N2050186HX	+
80	N2050187	+	N2050187HP	+	N2050187HX	+
100	N2050188	+	N2050188HP	+	N2050188HX	+
130	N2050189	+	N2050189HP	+	N2050189HX	+
150	N2050190	+	N2050190HP	+	N2050190HX	+
200	N2050191	+	N2050191HP	+	N2050191HX	+

More informations about knives with HP or HX coating on page 8.8 of the catalogue.

HM tipped knives

Cutting knife with **HM tip** designed for professional machining of solid wood. The knife is used for precise cutting of flat surfaces. Special geometry allows for working together with GP cutter heads. Height regulated with precise serration. Knives thickness 10 mm. Depending on size and depth of the profile mould, the proper height of the carbide tip should be chosen.

Type of work: cutting flat surfaces, profilings.

Material: solid soft and hard wood, glued wood, chipboard, MDF, PCV.



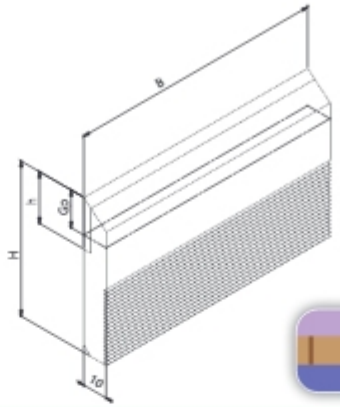



H = mm h = mm Gp_{max} = mm	50 20 15	60 20 15	60 25 19
B mm			
60	+	+	+
80	+	+	+
100	+	+	+
130	+	+	+

HM knives and backing plates

Cutting **knife HM with backing plate** designed for professional machining of solid wood. The knife is used for precise cutting of flat surfaces and profiling. Special geometry allows for working together with GP-01 and GPL-01 cutter heads. Height regulated with precise serration. Knives thickness 3,2 mm. The set includes backing plate which guarantees better support of the HM tip.

Type of work: cutting flat surfaces, profiling.

Material: solid soft and hard wood, glued wood, chipboard, MDF, PCV.



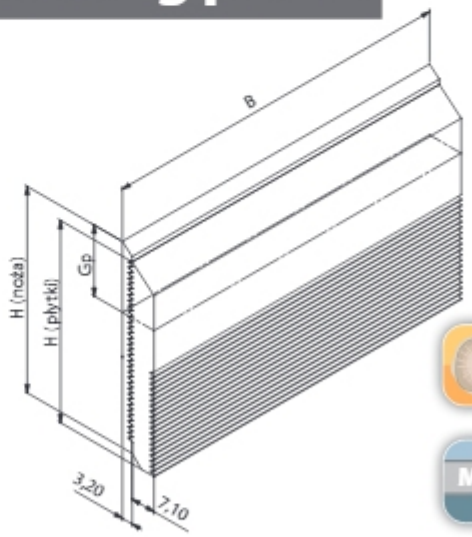



	Knife size H x b (Gp_{max}) mm		Support knife size H x b mm	
B mm				
60	50 x 3,2 (15)	+	47 x 7,1	+
60	60 x 3,2 (20)	+	57 x 7,1	+
100	50 x 3,2 (15)	+	47 x 7,1	+
100	60 x 3,2 (20)	+	57 x 7,1	+
150	50 x 3,2 (15)	+	47 x 7,1	+
150	60 x 3,2 (20)	+	57 x 7,1	+

Knives for cutter heads

1100-4

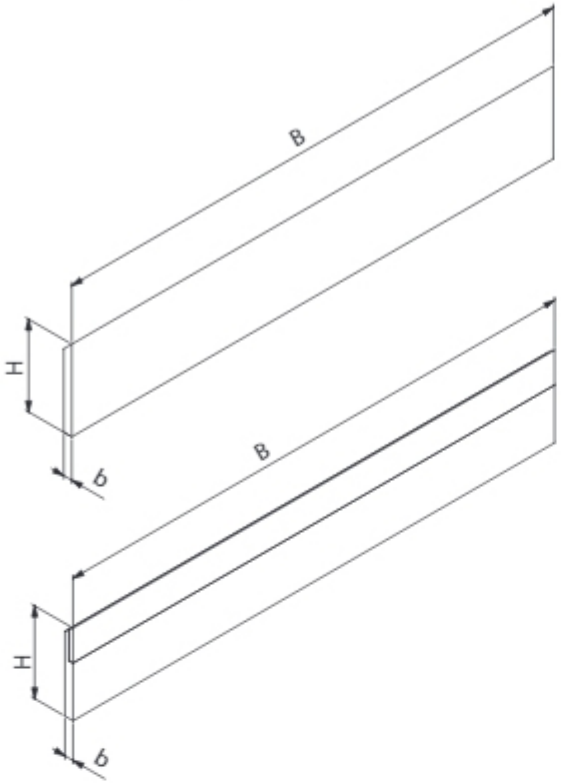

Precise cutting knife, type **1100-4** with one cutting edge, designed for professional machining of solid wood. The knife is used for cutting flat surfaces. Special geometry allows for working together with 1100-4 and 1100-5 cutter heads.

Type of work: cutting flat surfaces

Material:
HSS solid softwood
HM solid hardwood

b H	3 30		3 35		3 30	
B mm	Catalogue number HSS		Catalogue number HSS		Catalogue number HM	
60	N2040101	+	N2040201	+	N2040101W	•
80	N2040102	•	N2040202	+	N2040102W	•
100	N2040103	•	N2040203	•	N2040103W	•
130	N2040104	•	N2040204	•	N2040104W	•
150	N2040105	•	N2040205	•	N2040105W	•
160	N2040106	•	N2040206	+	N2040106W	•
180	N2040107	•	N2040207	+	N2040107W	•
200	N2040141	•			N2040141W	+
230	N2040108	•	N2040208	•	N2040108W	•
270	N2040109	•	N2040209	+	N2040109W	+
300	N2040110	+	N2040210	+	N2040110W	+
310	N2040137	•				
350	N2040111	+	N2040211	+	N2040111W	+
410	N2040112	•	N2040212	•	N2040112W	•
510	N2040114	•	N2040214	•	N2040114W	+
610	N2040116	•	N2040216	•	N2040116W	+
640	N2040118	•	N2040218	•		
710	N2040119	+				
810	N2040120	•	N2040220	•		

Knives 1100-4 with length not given in the chart we offer on client's request according to individual pricing.

1100-4 H

Precise cutting knife, type **1100-4H** and coated knife type TYGRYS with one cutting edge, designed for professional machining of solid wood. The knife is used for precise cutting of flat surfaces. Special geometry allows for working together with 1100-4H and 1100-5H cutter heads. The knife is offered as HSS steel or HSS 18% wolfram version, as well as with HP and HX coating increasing life of the knife several times.

Type of work: cutting flat surfaces.

Material:
- HSS solid softwood
- HSS 18% solid, dry softwood and hardwood
- HP solid, dry wood, plastics
- HX solid, wet wood, plastics

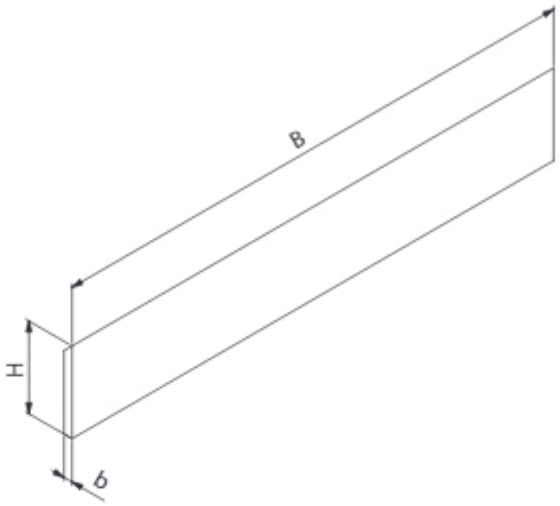

TYGRYs

HSS 18% HSS HP HX

PCV

8

b H	3 30		3 30		3 30		3 30	
B mm	Catalogue number HSS		Catalogue number HSS 18%		Catalogue number HP		Catalogue number HX	
60	N2041101	+	N2041101.18	+	N2081101HP	•	N2081101HX	+
80	N2041102	+	N2041102.18	+	N2081102HP	+	N2081102HX	+
100	N2041103	•	N2041103.18	+	N2081103HP	•	N2081103HX	+
130	N2041104	•	N2041104.18	•	N2081104HP	•	N2081104HX	+
150	N2041105	•	N2041105.18	•	N2081105HP	•	N2081105HX	+
160	N2041106	•	N2041106.18	•	N2081106HP	+	N2081106HX	+
180	N2041107	•	N2041107.18	•	N2081107HP	•	N2081107HX	+
200					N2081141HP	+	N2081141HX	+
230	N2041108	•	N2041108.18	•	N2081108HP	•	N2081108HX	+
270	N2041109	+	N2041109.18	+	N2081109HP	+	N2081109HX	+
300	N2041110	+			N2081110HP	+	N2081110HX	+
310					N2081137HP	+	N2081137HX	+

Knives 1100-4 HSS with length not given in the chart (max 310 mm) we offer on client's request according to individual pricing.

More informations about knives with HP or HX coating on page 8.8 of the catalogue.

SUPER LONGLIFE knives 1100-4 H TYGRYS HP and HX

PERFECT SURFACE QUALITY INCREASED LIFE OF THE KNIFE



1100-4H knives have been improved by adding special HP or HX coating. The coating, properly chosen for the kind of machined material significantly (even several times) increases life of the knife.

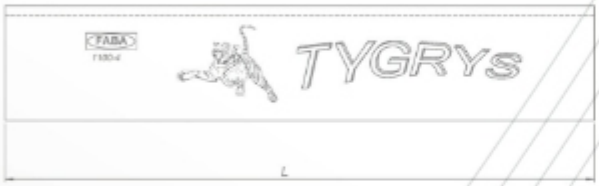

Planer knives **1100-4H** in special version with increased manufacturing precision with coating:

- **HP** are designed for dry and hard wood cutting. Maximum temperature of work in wood up to 200°C.
- **HX** are designed for wet and soft wood cutting. Maximum temperature of work in wood up to 300°C.



We produce knives 35 mm high or with dimensions not given in the catalogue (max. 310 mm) as well as HX coated knives on client's request within 20 working days according to individual pricing.



Two-edge inserts

Cutting blades with two cutting edges designed for professional machining of solid wood and wood-based materials such as chipboard, MDF and others. The blades are used for cutting flat surfaces, grooving and profiling.

Type of work: cutting flat surfaces, grooving.

Material: solid wood, chipboard.

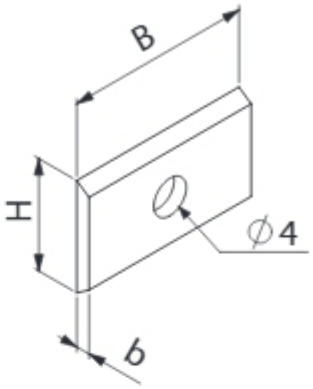

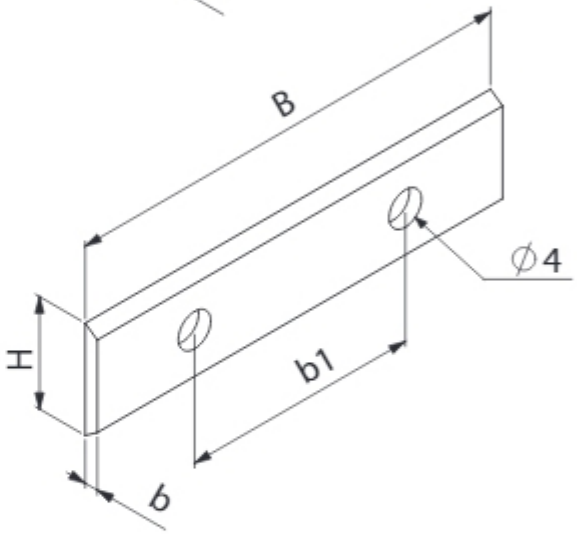

Two-edge S

Inserts made form super hard carbide which guarantees increased durability and abrasion resistance.

Material: chipboard, laminated board, MDF, HDF.





Catalogue number	Type	B x H x b mm	b1 mm	Number of holes	
N0000801		7,5 x 12 x 1,5		1	•
N0000802		9,6 x 12 x 1,5		1	•
N0000803		11,6 x 12 x 1,5		1	•
N0000804		15,0 x 12 x 1,5		1	•
N0000804S	S	15,0 x 12 x 1,5		1	•
N0000829		15,7 x 12 x 1,5		1	+
N0000826		17,0 x 12 x 1,5		1	+
N0000509		19,6 x 12 x 1,5		1	•
N0000805		20,0 x 12 x 1,5		1	•
N0000736	S	20,0 x 12 x 1,5		1	•
N0000806		24,7 x 12 x 1,5-1		1	•
N0000807		24,7 x 12 x 1,5-2	14	2	•

Catalogue number	Type	B x H x b mm	b1 mm	Number of holes	
N0000808		30,0 x 12 x 1,5	14	2	•
N0000835	S	30,0 x 12 x 1,5	14	2	•
N0000809		40,0 x 12 x 1,5	26	2	•
N0000823S	S	40,0 x 12 x 1,5	26	2	•
N0000810		50,0 x 12 x 1,5	26	2	•
N0000837	S	50,0 x 12 x 1,5	26	2	•
N0000516		59,5 x 12 x 1,5	26	2	•
N0000811		60,0 x 12 x 1,5	26	2	•
N0000838	S	60,0 x 12 x 1,5	26	2	•
N0000636		79,6x 13 x 2,2	60	2	+
N0000861		80,0 x 13 x 2,2	60	2	•
N0000843		100,0 x 13 x 2,2	60	2	+

Four-edge inserts

Cutting blades with four cutting edges designed for professional machining of solid wood and wood-based materials such as chipboard, MDF and others. The blades are used for cutting flat surfaces and grooving.

Type of work: cutting flat surfaces, grooving.

Material: solid wood, chipboard.

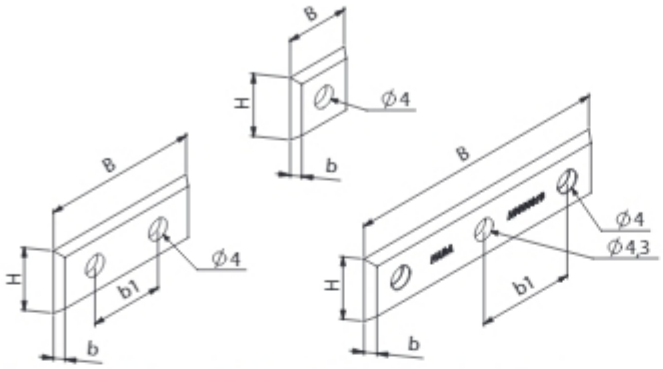





Catalogue number	Type	B x H x b mm	b1 mm	Number of holes	
N0000813		12 x 12 x 1,5		1	•
N0000854S		12 x 12 x 1,5		1	•
N0000828		17 x 17 x 2,0		1	•
N0000814		29,5 x 12 x 1,5	14	2	•

Catalogue number	Type	B x H x b mm	b1 mm	Number of holes	
N0000815		39,5 x 12 x 1,5	26	2	+
N0000816		49,5 x 12 x 1,5	26	2	•
N0000812		50 x 12 x 1,7	18,5	3	•

Four-edge R / Spur knives

Four-edge inserts R used in cutter heads type G309 and G509. The inserts are perfect for finishing. Special geometry guarantees excellent surface quality.

Spur knives used for tenoning cutter heads as well as traditional and spiral ones. Designed for machining solid hard and soft wood and glued wood.

Type of work: cutting flat surfaces, grooving.

Material: solid wood, chipboard, MDF.

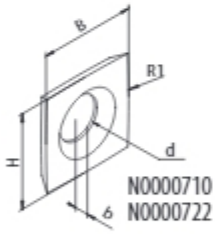

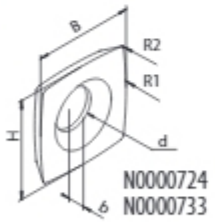

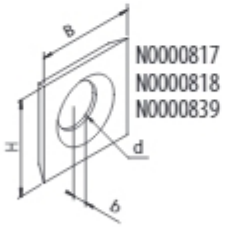

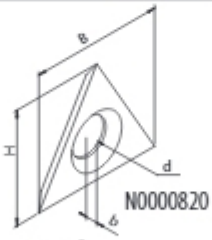

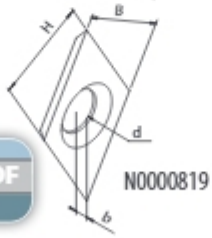

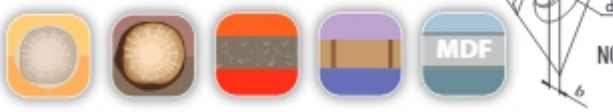



Catalogue number	B x H x b mm	R1/R2 mm		d mm	
N0000710	14 x 14 x 2,0	150	□	6,5	•
N0000722	15 x 15 x 2,5	50	□	6,2	+
N0000724	15 x 15 x 2,5	50/0,6	□	6,2	+
N0000733	15 x15 x 2,5	150/0,5	□	6,2	•
N0000777	15 x 15 x 2,5	115	□	6,2	•

Catalogue number	B x H x b mm		d mm	
N0000817	14 x 14 x 1,2	□	8,3	•
N0000818	14 x 14 x 2,0	□	6,5	•
N0000819	14 x 14 x 2,0	◇	6,5	•
N0000839	14,3 x 14,3 x 2,5	□	6,5	•
N0000820	22 x 19 x 2,0	△	6,5	•

FKB-45°

Knives type **FKB-45** are used in specialist cutter heads for edge beveling of the machined elements. Edge beveling is possible within the range of 1–3 mm x 45. The knife is made entirely from HM.

Material: solid wood, soft and hard, glued wood.

Catalogue number	B x H x b mm		
N0000870	16 x 22 x 5	45°	•



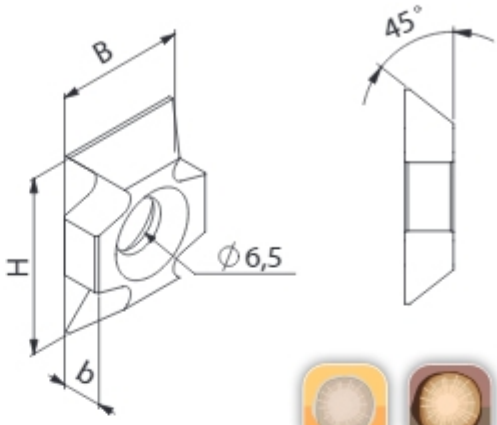



FKB-R

Knives type **FKB-R** are used in specialist cutter heads for edge rounding of the machined elements. Edge rounding is possible within the range of 1–3 mm. The knife is made entirely from HM.

Material: solid wood, soft and hard, glued wood.

Catalogue number	B x H x b mm	R mm	
N0000871	16 x 22 x 5	1,0	+
N0000872	16 x 22 x 5	1,5	•
N0000873	16 x 22 x 5	2,0	•
N0000874	16 x 22 x 5	2,5	•
N0000875	16 x 22 x 5	3,0	•



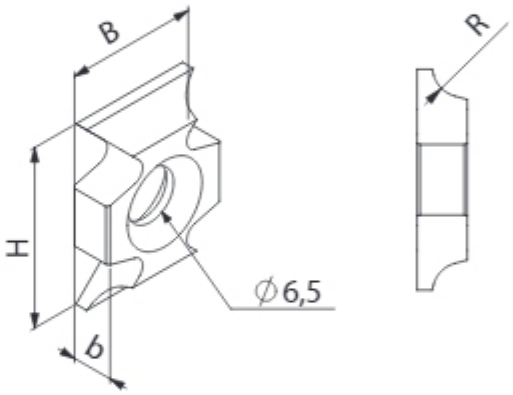



Grooving knife

Grooving knives are used for making grooves e.g. for silicone. The range of available width 3–5 mm. Maximum groove depth 10 mm.

Material: solid wood, soft and hard, glued wood.

Catalogue number	H x B x b mm	b mm	
N0000880	24,5 x 13 x 3,0	3	+
N0000881	24,5 x 13 x 4,0	4	•
N0000882	24,5 x 13 x 5,0	5	+



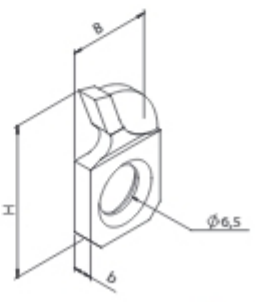



NOB-01A

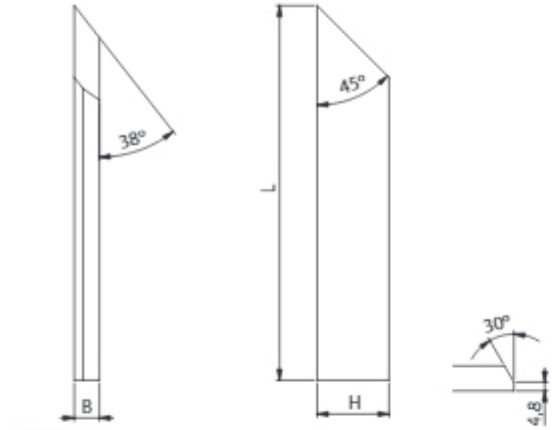

Drawing shows left knife.

Cutting knife, type **NOB-01A** designed for solid wood roughing. The knife is used for pre-cutting. Additional profile edge improves surface quality and lowers energy consumption.

Type of work: cutting flat surfaces.

Material: solid hardwood.

Catalogue number	L mm	H mm	B mm			
N2100593P	140	20	10	HSS	P	+
N2100593L	140	20	10	HSS	L	+
N2100416P	140	33	10	HSS	P	+
N2100416L	140	33	10	HSS	L	•
N2100536P	200	20	10	HSS	P	+
N2100536L	200	20	10	HSS	L	+

NOB-01B

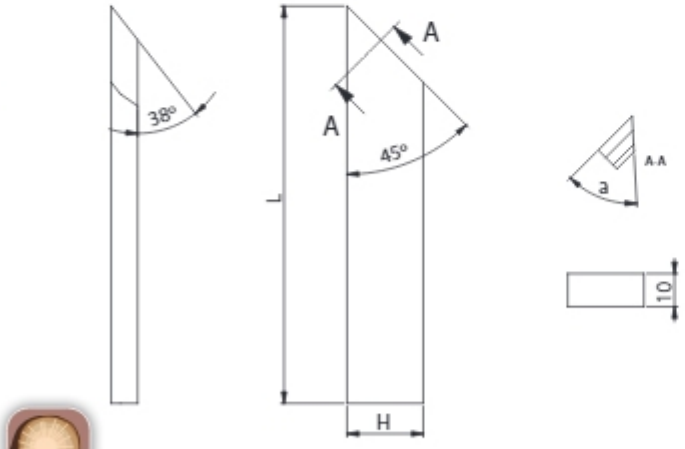

Drawing shows left knife.

Cutting knife, type **NOB-01B** designed for solid wood roughing. The knife is used for pre-cutting. Special geometry increases performance and machining efficiency.

Type of work: cutting flat surfaces.

Material: solid hardwood.

Catalogue number	L mm	H mm	B mm	α			
N2100319P	200	20	10	40°	HSS	P	+
N2100319L	200	20	10	40°	HSS	L	•
N2100088P	200	20	10	35°	HSS	P	+
N2100088L	200	20	10	35°	HSS	L	+

NOB-02A

Cutting knife, type **NOB-02A** designed for solid wood roughing. The knife is used for pre-cutting. Special geometry increases performance and machining efficiency. The knife is equipped with a special slot enabling height regulation.

Type of work: cutting flat surfaces.

Material: solid hardwood.

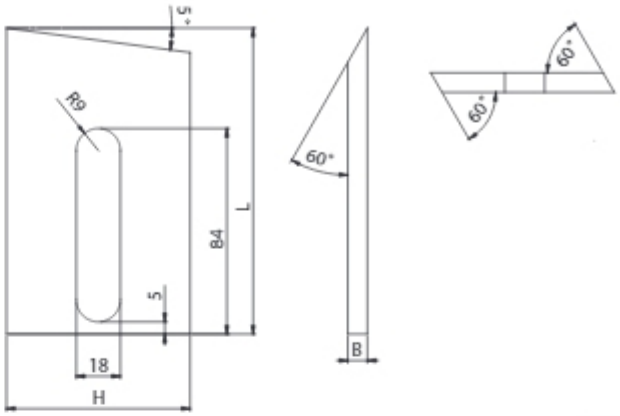

Drawing shows left knife.

Catalogue number	L mm	H mm	B mm			
N2100006P	125	75	5	HSS	P	+
N2100006L	125	75	5	HSS	L	•
N2100412P	125	75	8	HSS	P	+
N2100412L	125	75	8	HSS	L	+

NOB-02B

Cutting knife, type **NOB-02B** designed for pre-cutting. Special geometry increases performance and machining efficiency. The knife is equipped with a special slot enabling height regulation and easy installation.

Type of work: cutting flat surfaces.

Material: solid hardwood.

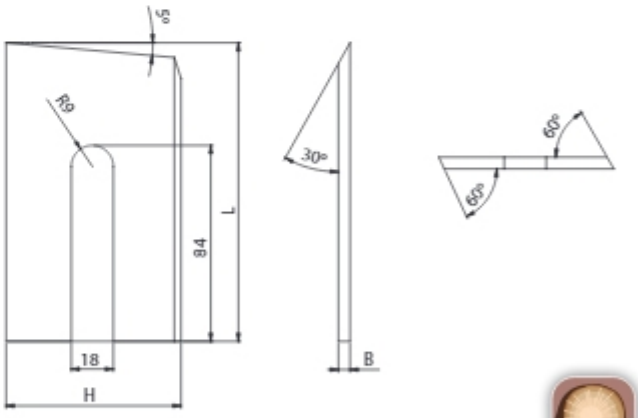

Drawing shows left knife.

Catalogue number	L mm	H mm	B mm			
N2100438P	125	75	5	HSS	P	+
N2100438L	125	75	5	HSS	L	•
N2100540P	135	75	5	HSS	P	+
N2100540L	135	75	5	HSS	L	+

Knives NOB-02 with length not given in the chart we offer on client's request according to individual pricing.

Knives for debarking

NNK-01

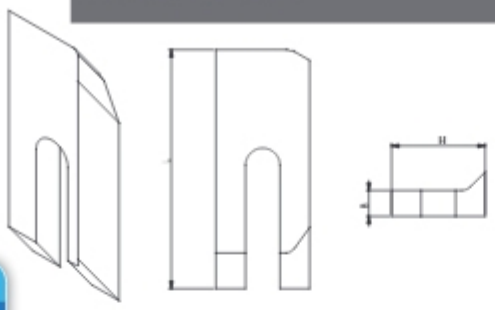

Drawing shows right knife.

Cutting knife, type **NNK-01** designed for pre-cutting during debarking. Additional profile edge improves surface quality and lowers energy consumption. The knife is equipped with a special slot enabling height regulation and easy installation.

Type of work: debarking.

Material: solid wet wood

HSS

Catalogue number	L mm	H mm	B mm			
N2100834P	97	38	18	HSS	P	+
N2100834L	97	38	18	HSS	L	+
N2100190P	98	38	17	HSS	P	+
N2100190L	98	38	17	HSS	L	+

NNK-02

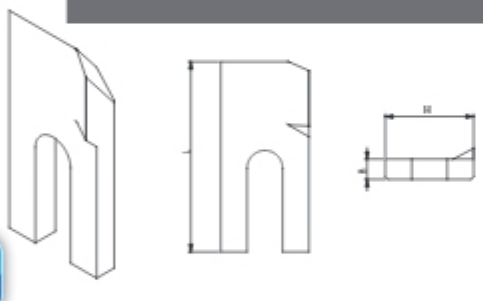

Drawing shows left knife.

Cutting knife, type **NNK-02** designed for pre-cutting during debarking. Additional profile edge improves surface quality and lowers energy consumption. The knife is equipped with a special slot enabling height regulation.

Type of work: debarking.

Material: solid wet wood

HSS

Catalogue number	L mm	H mm	B mm			
N2100750P	75	35	12,5	HSS	P	+
N2100750L	75	35	12,5	HSS	L	+

NNK-03

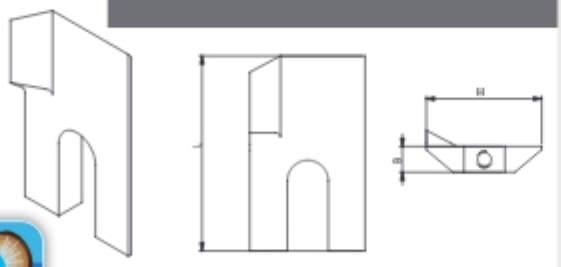

Drawing shows right knife.

Cutting knife, type **NNK-02** designed for pre-cutting during debarking. Additional profile edge improves surface quality and lowers energy consumption. The knife is equipped with a special slot enabling height regulation and additional positioning system.

Type of work: debarking

Material: solid wet wood

HSS

Catalogue number	L mm	H mm	B mm			
N2100232	71	42	15,3	HSS	P	+
N2100233	71	42	15,3	HSS	L	+

Knives and inserts

Cutting HM and HSS knives with properly chosen number of cutting edges, designed for professional machining of solid wood and wood-based materials. The knives are used for precise cutting of flat surfaces and profiling. Special geometry allows for working with chosen cutter heads. Properly chosen for the type of material as well as parameters and conditions during work.

Knives and inserts made on client's individual request.

With the order the following information should be given:
- tool outer diameter (D) or diameter range,
- HM tip depth (h),
- knife length (H),
- knife thickness (b),
- profile depth (Gp),
- type of machined material,
- number of teeth (z) or spindle rotation speed and feed speed.

Type of work: cutting flat surfaces, grooving, rebating, edge and surface profiling.

Material:
HSS solid softwood
HM solid hardwood

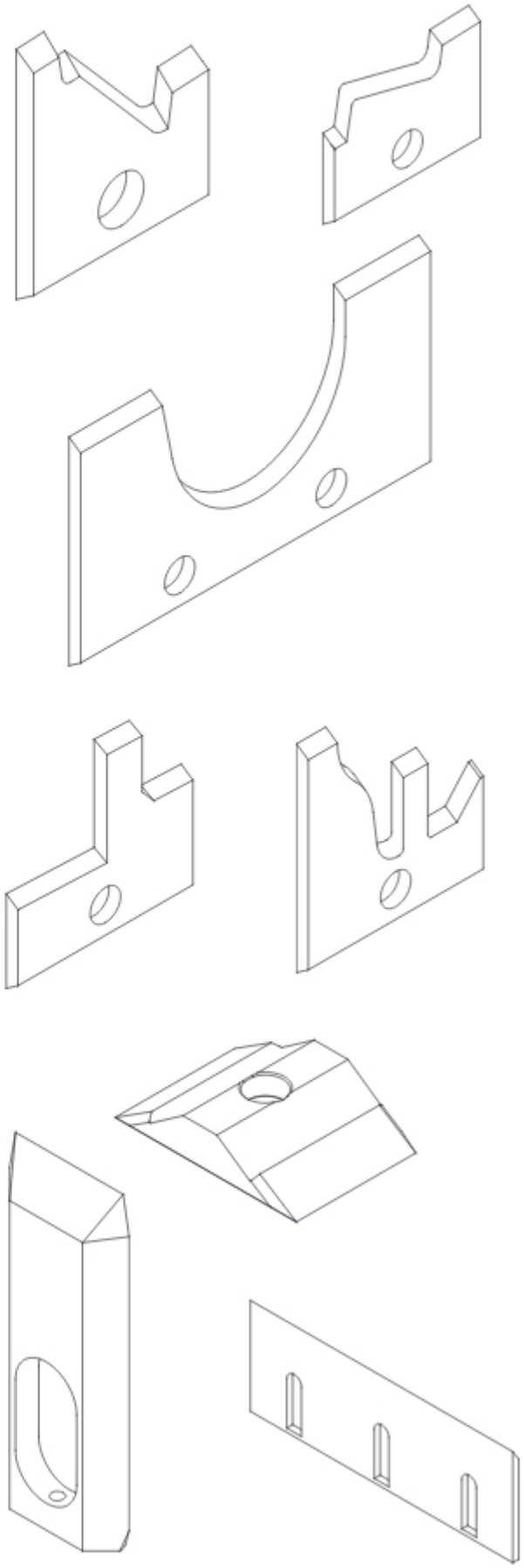

HSS HM

KST-01



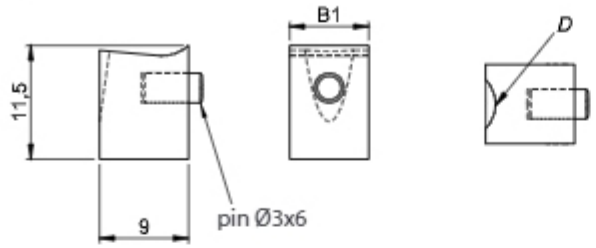

Clamping wedge, type **KST-01** designed for mounting cutting knives in the cutter head body slot. Includes safety pin.

Type of work: straight and profile cutter heads.

Catalogue number	D mm	B1 mm	B (knife) mm	
WHAKA0024	7	7	9,6	+
WHAKA0025	7	8,0	9,6	+
WHAKA0026	10	10	11,6	+
WHAKA0082	10	12	15,7	+
WHAKA0030	10	14	17	+
WHAKA0034	10	17	20	•
WHAKA0037	10	22	25	+
WHAKA0040	10	27	30	•
WHAKA0043	10	47	50	•
WHAKA0044	10	57	60	•
WHAKA0046	10	77	80	•

KST-02

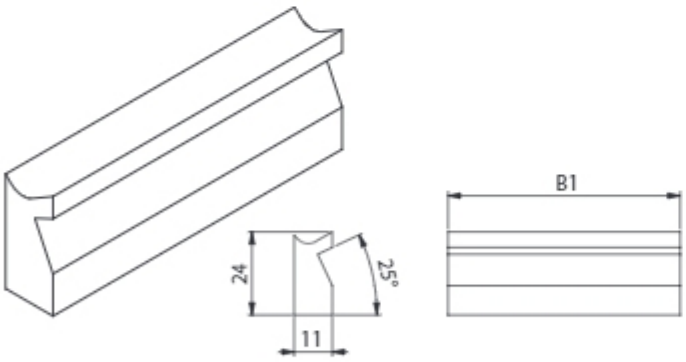

Clamping wedge, type **KST-02** designed for mounting cutting knives in the cutter head body slot. Works with cutter heads type 1100-4 and 1100-4H.

Type of work: cutter heads 1100-4 and 1100-4H.

Catalogue number	B1 mm	B (knife) mm	
WHAK00002	57	60	+
WHAK00003	77	80	+
WHAK00004	97	100	+
WHAK00095	117	120	+
WHAK00096	127	130	+
WHAK00085	147	150	+
WHAK00016	177	180	+
WHAK00098	227	230	+

KST-03

Clamping wedge, type **KST-03** designed for mounting cutting knives in the cutter head body slot. Works with cutter heads type GP-01 and GP-01 H. The wedge is used for precise mounting of knives with thicknesses of 8 and 10 mm.

Type of work: cutter heads GP-01 and GP-01 H.

Catalogue number	B1 mm	B (knife) mm	
WHAK00101	40	8	+
WHAK00122	40	10	+
WHAK00102	50	8	+
WHAK00123	50	10	+
WHAK00103	60	8	+
WHAK00124	60	10	+
WHAK00105	80	8	+
WHAK00125	80	10	+
WHAK00107	100	8	+
WHAK00126	100	10	+
WHAK00109	120	8	+
WHAK00112	150	8	+
WHAK00128	150	10	+
WHAK00115	180	8	+
WHAK00117	200	8	+
WHAK00130	200	10	+

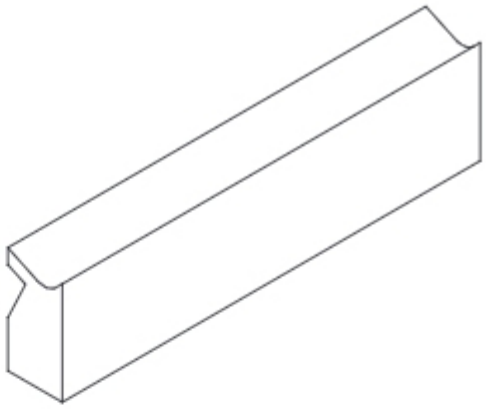

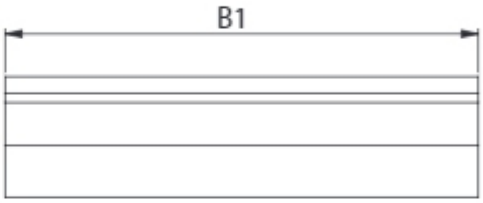

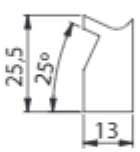

for knive B = 8 mm

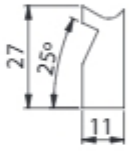

for knive B = 10 mm

SC-01

Clamping screws, cylindrical type **SC-01** designed for mounting sets of cutter heads and cutters.

Catalogue number	Standard	M6xL mm	
WHAS00116	PN 82302	M6x17	+
WHAS00102	PN 82302	M6x36	+
WHAS00068	PN 82302	M6x46	+
WHAS00069	PN 82302	M6x50	+
WHAS00037	PN 82302	M6x58	+
WHAS00100	PN 82302	M6x60	+
WHAS00085	PN 82302	M6x25	+
WHAS00053	PN 82302	M6x68	+
WHAS00061	PN 82302	M6x73	+
WHAS00093	PN 82302	M6x85	+
WHAS00091	PN 82302	M6x88	+
WHAS00092	PN 82302	M6x61	+
WHAS00040	PN 82302	M6x98	+
WHAS00030	PN 82302	M6x100	+
WHAS00099	PN 82302	M6x108	+

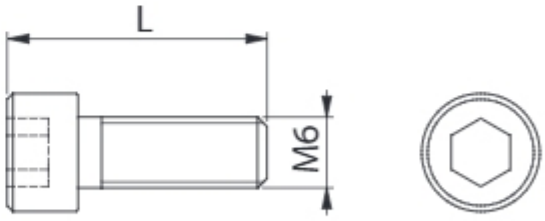

SM-01

Clamping screws, type **SM-01** designed for precise mounting of cutting tools elements.

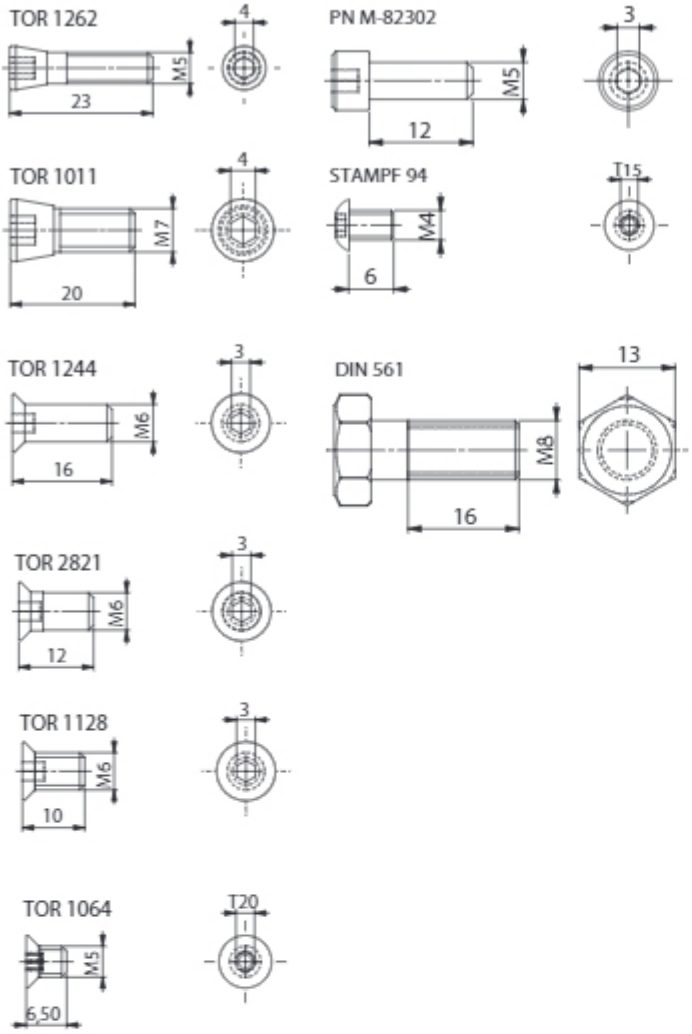

Catalogue number	Standard	Dimensions	
WHAS00004	STAMPF 94	M4 x 6	•
WHAS00024	TOR 7020	M4 x 6	+
WHAS00008	TOR 1064	M5 x 6,5	•
WHAS00009	TOR1924	M5 x 7	•
WHAS00015	TOR 1065	M5 x 10	•
WHAS00026	DIN 551	M5 x 10	+
WHAS00023	PN82302	M5 x 12	+
WHAS00007	TOR 1262	M5 x 23	•
WHAS00006	TOR 1128	M6 x 10	•
WHAS00012	TOR 2821	M6 x 11,8	•
WHAS00010	TOR 1244	M6 x 16	•
WHAS00002	PN 82302	M6 x 22	•
WHAS00011	TOR 1011	M7 x 20	•
WHAS00003	TOR 5046	M8 x 12	•
WHAS00001	DIN 561	M8 x 16	•

WM-01

Clamping screws, type **WM-01** designed for precise mounting of cutting tools elements.

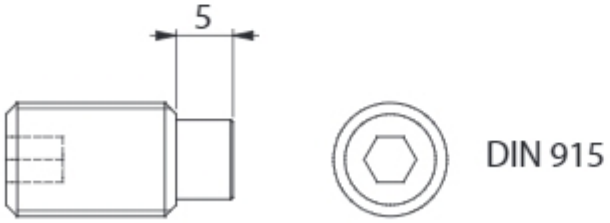

Catalogue number	Standard	Dimensions	
WHAW00001	DIN 915	M4 x 6	•
WHAW00009	DIN 914	M5 x 5	•
WHAW00002	DIN 915	M5 x 12	•
WHAW00008	DIN 914	M6 x 6	•
WHAW00021	DIN 915	M6 x 8	•
WHAW00003	DIN 915	M6 x 10	•
WHAW00004	DIN 915	M6 x 16	•
WHAW00005	DIN 915	M8 x 16	•
WHAW00006	DIN 915	M10 x 16	+
WHAW00007	DIN 915	M10 x 20	•
WHAW00012	DIN 915	M10 x 1 x 20	+

TRK

Reduction sleeve with flange, type **TRK**, designed for reducing bore diameter.

Type of work: cutter heads and cutters with bore.



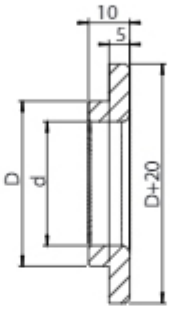

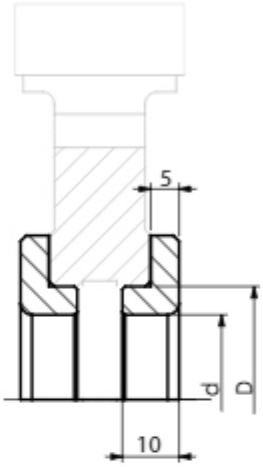

Catalogue number		
WHAT00045	40 / 35 x 10	•
WHAT05247	40 / 32 x 10	•
WHAT00003	40 / 30 x 10	•
WHAT05248	40 / 25 x 10	•
WHAT00002	35 / 30 x 10	•
WHAT00001	30 / 25 x 10	•
WHAT05253	30 / 22 x 10	•
WHAT00375	30 / 20 x 10	•

TR

Reduction sleeve, type **TR**, designed for reducing bore diameter of single tools and sets

Type of work: cutter heads and cutters with bore, sets of cutters and cutter heads.

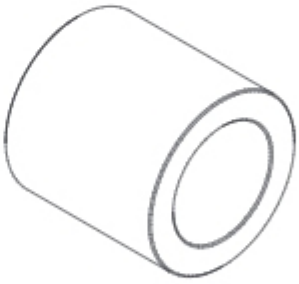

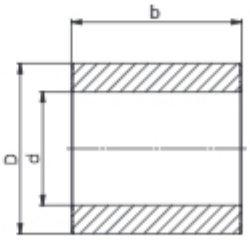

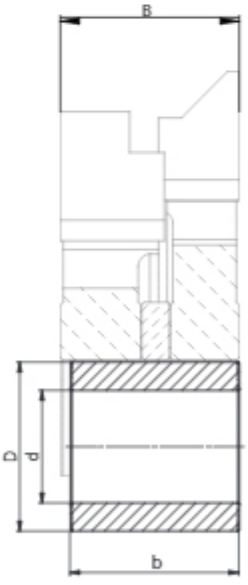

b mm / D/d mm	7	10	15
40 / 35	WHAT05233 •	WHAT00295 •	WHAT00896 •
40 / 32	WHAT05234 •	WHAT00144 •	WHAT05236 •
40 / 30	WHAT01022 •	WHAT00148 •	WHAT00593 •
40 / 25	WHAT01787 •	WHAT00389 •	WHAT00611 •
30 / 25	WHAT05235 •	WHAT00100 •	WHAT00101 •

b mm / D/d mm	20	25	30	35	40	50	65	75
40 / 35	WHAT00714 •	WHAT00205 •	WHAT00196 •	WHAT03025 •	WHAT00197 •	WHAT00198 •	WHAT00698 •	WHAT00705 •
40 / 32	WHAT00327 •	WHAT03346 •	WHAT05237 •	WHAT00989 •	WHAT05240 •	WHAT05241 •	WHAT05242 •	WHAT05245 •
40 / 30	WHAT00572 •	WHAT00150 •	WHAT00212 •	WHAT00323 •	WHAT00357 •	WHAT00832 •	WHAT01192 •	WHAT00518 •
40 / 25	WHAT00242 •	WHAT00298 •	WHAT00243 •	WHAT05238 •	WHAT04535 •	WHAT00422 •	WHAT05243 •	WHAT05244 •
30 / 25	WHAT00102 •	WHAT00334 •	WHAT00005 •	WHAT00681 •	WHAT00042 •	WHAT00545 •	WHAT03020 •	WHAT05246 •

TB-01

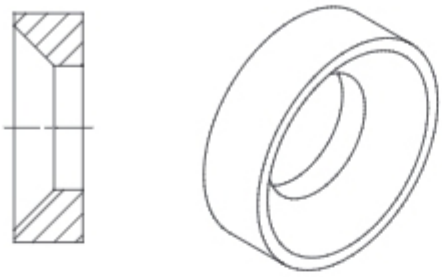

Positioning sleeves, type **TB-01** designed for profile cutter heads. Used for precise mounting of cutting blades.

Type of work: profile cutter heads.

Catalogue number	Dimensions	
WHAT00044	12 x 6,5 x 3,6	+
WHAT03285	12 x 6,5 x 2,8	+
WHAT01605	12 x 6,5 x 2,3	+
WHAT00456	12 x 6,5 x 1,7	+
WHAT00358	12 x 6,5 x 2,5	+

PD-01

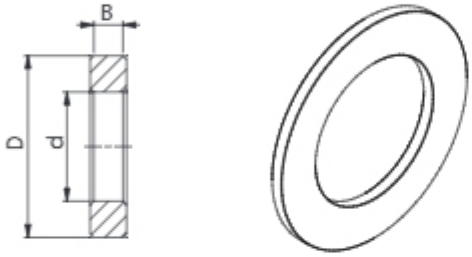

PD-01 Spacer ring made from hard steel, designed for tool positioning and regulating width of sets of tools. Width regulation involves adding or removing spacers of given thickness. Used for sets of cutters and cutter heads assembled without screws.

Designed for: sets of cutters or cutter heads - not screwed together.

D mm / d mm	50 / 30	60 / 40	70 / 50	80 / 60
B mm				
0,1	WHAP00214 •	WHAP00060 •	WHAP00027 •	WHAP00035 •
0,2	WHAP00215 •	WHAP00077 •	WHAP00028 •	WHAP00036 •
0,5	WHAP00142 •	WHAP00076 •	WHAP00029 •	WHAP00037 •
1	WHAP00006 •	WHAP00017 •	WHAP00030 •	WHAP00038 •
2	WHAP00007 •	WHAP00018 •	WHAP00031 •	WHAP00039 •

D mm / d mm	50 / 30	60 / 40	70 / 50	80 / 60
B mm				
2,5	WHAP01210 •	WHAP01649 •	WHAP00437 •	WHAP01612 •
3	WHAP00141 •	WHAP08150 •	WHAP00032 •	WHAP00040 •
4	WHAP08149 •	WHAP02731 •	WHAP06546 •	WHAP03164 •
5	WHAP00008 •	WHAP00019 •	WHAP00033 •	WHAP00041 •
10	WHAP00009 •	WHAP00020 •	WHAP00034 •	WHAP00042 •

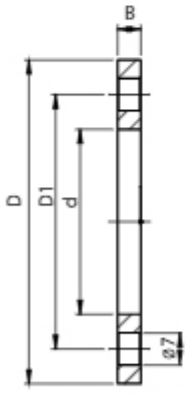

PD-01 with pinholes

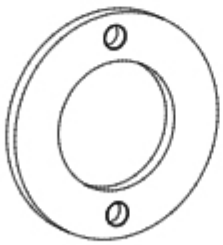

PD-01 Spacer ring made from hard steel, with pinholes, designed for tool positioning and regulating width of sets of tools. Used for sets of cutters and cutter heads assembled with screws. Width regulation involves adding or removing spacers of given thickness.

Designed for: sets of cutters or cutter heads - screwed together.

D mm / d mm / D1 mm	60 / 30 / 45	70 / 40 / 55	80 / 50 / 65
B mm			
0,1	WHAP07722 •	WHAP06708 •	WHAP08134 •
0,2	WHAP05012 •	WHAP01900 •	WHAP08133 •
0,5	WHAP05013 •	WHAP05005 •	WHAP05000 •
1	WHAP05014 •	WHAP05006 •	WHAP05001 •
2	WHAP05015 •	WHAP05007 •	WHAP05002 •

D mm / d mm / D1 mm	60 / 30 / 45	70 / 40 / 55	80 / 50 / 65
B mm			
2,5	WHAP08156 •	WHAP08151 •	WHAP08153 •
3	WHAP08157 •	WHAP06921 •	WHAP08154 •
4	WHAP08158 •	WHAP08152 •	WHAP08155 •
5	WHAP05016 •	WHAP05008 •	WHAP05003 •
10	WHAP05017 •	WHAP05009 •	WHAP05004 •

Spacer rings with pinholes for hydro sleeves on page 9.24.

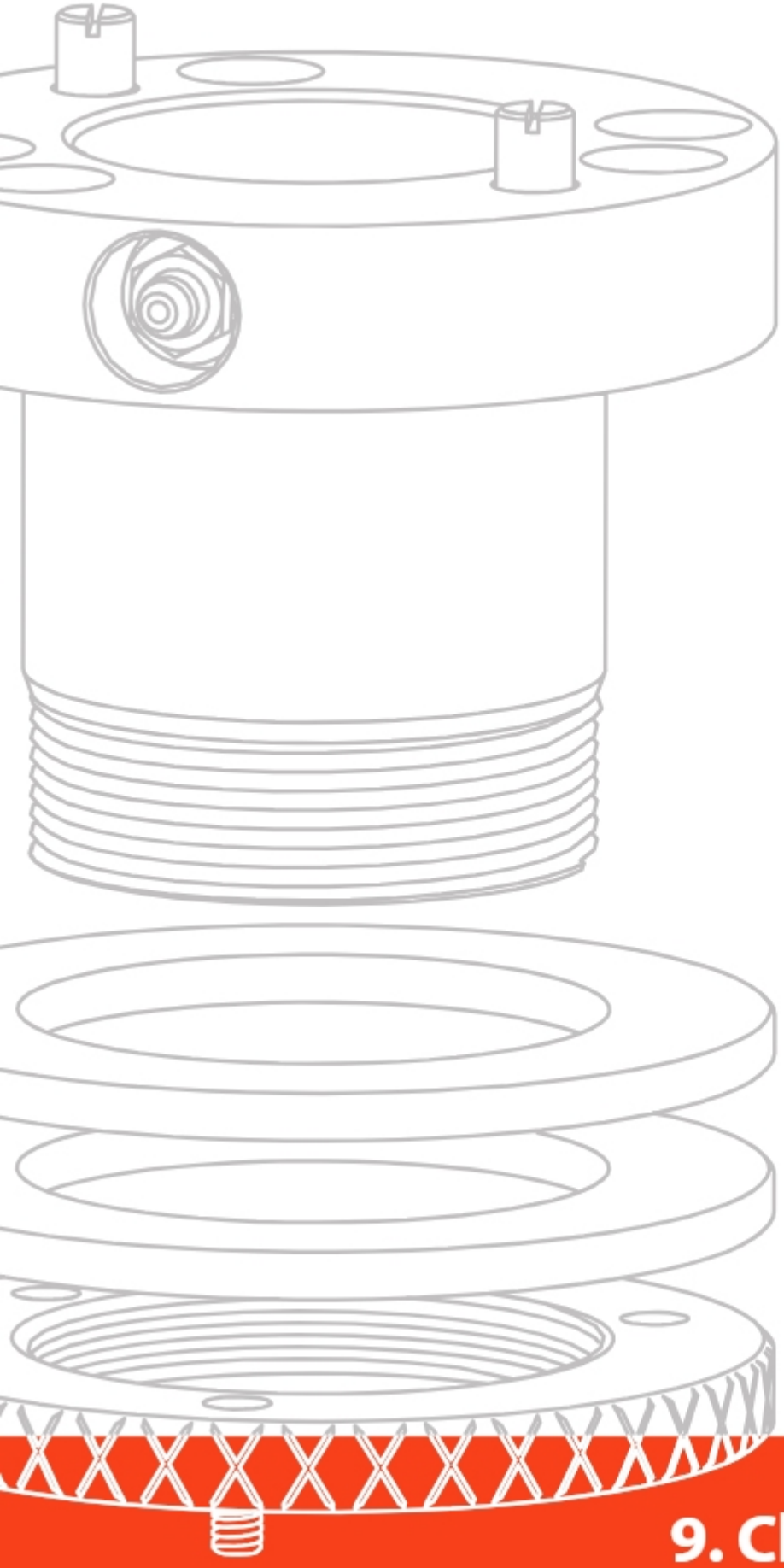

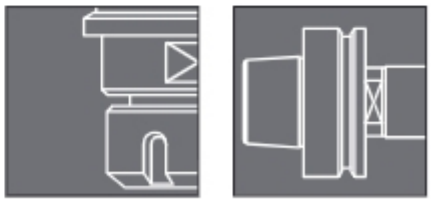

9. Clamping systems

Clamping systems

Clamping system produced in the form of collet chucks, clamping arbors, hydro sleeves and special sleeves. Clamping elements are designed for precise locating of tools with cylindrical and axial bore.

Clampings elements are made from the highest quality steel in special heat treatment technology, properly selected for the type of tools working with a sleeve or shank as well as parameters and conditions prevailing during the machining, in order to guarantee stiffness of the system and proper work of tools, both in standard and extreme conditions.

All types of clamping elements are manufactured on modern CNC machines of world-renowned producers, which guarantee high accuracy and precision of the produced tools. The construction and production remains in accordance with all points of safety standard EN/PN-847-1 concerning tools for.

The *Clamping systems* chapter includes only example types of collet chucks, arbors and hydro sleeves with basic dimensions. On special request, we can suggest, design and produce also tools with ISO, HSK and hydro clamping as monolith, where clamping is an integral part of the cutter. The whole system can't be dismantled which allows for precise sharpening and balancing of the tool. Time of production of a chosen clamping system marked with "+" as well as systems on client's special request usually doesn't exceed 10-15 working days.



Contents

9. CLAMPING SYSTEMS

Pictograms 9.3

9.1 Collet chucks 9.4

9.2 Hydro chucks 9.6

9.3 Clamping arbors 9.8

9.4 Precision collets 9.11

9.5 Bolts for collet chucks and grips ISO, Tornado and accesories 9.12

9.6 Hydro sleeves 9.13

9.7 Spare and extra parts to hydro sleeves 9.23

9.8 Sleeves for GO windows 9.26

9.9 Special sleeves 9.27

Pictograms


hydro clamping


HSK 85 WS clamping



CNC centre


pressure generated with a pump


pressure generated with a key

HSK 50F
HSK 63F

Collet chuck type **HSK 50F** and **HSK 63F** designed for mounting shank tools with cylindrical grip. The collet chuck is equipped with precise conical hollow grip according to DIN 69893. The diameters range of shank tools is from 6 to 25 mm regulated with precision collets. Automatic loosening and tightening by turning the nut. Increased concentricity and tightening force thanks to special nut.

Type of work: CNC machines equipped with automatic tool magazine with feeder.

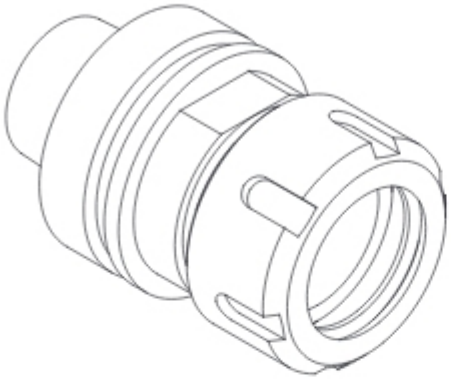

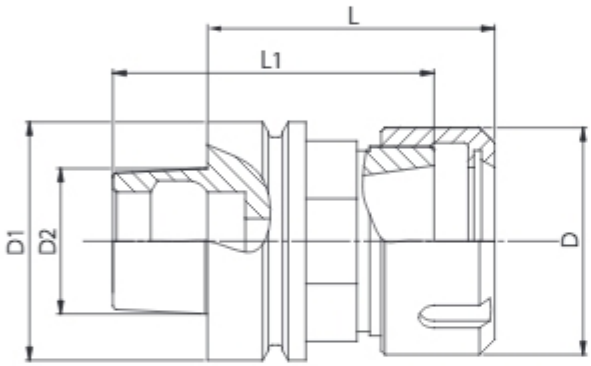

CNC

Catalogue number	Type	Collet type	D	D1	L	L1	D2	
TCNC.1001P	HSK 50	ER 32	50	50	72,5	50	30	+
TCNC.1001L	HSK 50	ER 32	50	50	72,5	50	30	+
TCNC.1002P	HSK 50	ER 40	63	50	76,5	62	30	+
TCNC.1002L	HSK 50	ER 40	63	50	76,5	62	30	+
TCNC.1003P	HSK 63	ER 32	50	63	72,5	50	38	+
TCNC.1003L	HSK 63	ER 32	50	63	72,5	50	38	+
TCNC.1004P	HSK 63	ER 40	63	63	76,5	62	38	+
TCNC.1004L	HSK 63	ER 40	63	63	76,5	62	38	+

List of precision collets on page 9.11.

ISO 30

Collet chuck type **ISO 30** designed for mounting shank tools with cylindrical grip. The collet chuck is equipped with precise conical hollow grip according to DIN 69871. without necks and cuts. The diameters range of shank tools is from 6 to 25 mm regulated with precision collets. Automatic loosening and tightening by turning the nut. Increased concentricity and tightening force thanks to special nut. Reduced vibration level during work.

Type of work: CNC machines.

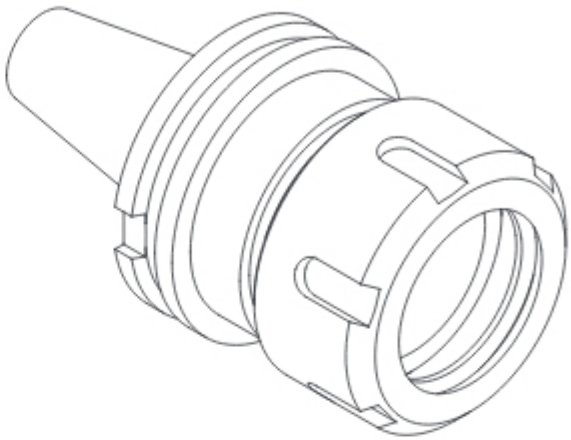

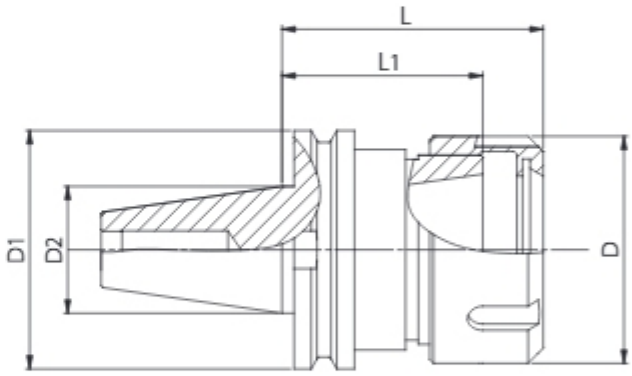

CNC

Catalogue number	Type	Collet type	D	D1	L	L1	D2	
TCNC.1005P	ISO 30	ER 32	50	50	48,5	36	31,75	•
TCNC.1005L	ISO 30	ER 32	50	50	48,5	36	31,75	+
TCNC.1006P	ISO 30	ER 40	63	50	58,5	42	31,75	•
TCNC.1006L	ISO 30	ER 40	63	50	58,5	42	31,75	+

Collet chucks are offered without mounting bolts.
List of mounting bolts on page 9.12.

List of precision collets on page 9.11.

HSK 63F HYDRO

Collet chuck type **HSK 50F** and **HSK 63F** designed for mounting shank tools with cylindrical grip. The collet chuck is equipped with precise conical hollow grip according to DIN 69893. The diameters range of shank tools is from 6 to 25 mm regulated with precision collets. Automatic loosening and tightening by turning the nut. Increased concentricity and tightening force thanks to special nut.

Type of work: CNC machines equipped with automatic tool magazine with feeder.



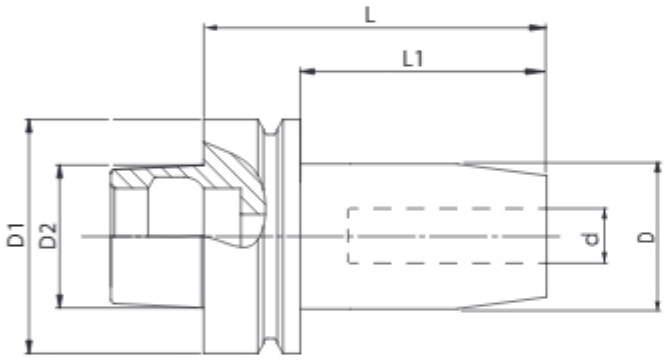

Catalogue number	Type	d	D	L	L1	D1	D2	
TCNH.1001	HSK 63F Hydro	10	30	90	65	63	38	+
TCNH.1002	HSK 63F Hydro	12	32	85	65	63	38	+
TCNH.1003	HSK 63F Hydro	16	38	95	69	63	38	+
TCNH.1004	HSK 63F Hydro	20	42	95	69	63	38	+
TCNH.1005	HSK 63F Hydro	25	52	120	94	63	38	+

ISO 30 HYDRO

Collet chuck type **ISO 30** designed for mounting shank tools with cylindrical grip. The collet chuck is equipped with precise conical hollow grip according to DIN 69871. without necks and cuts. The diameters range of shank tools is from 6 to 25 mm regulated with precision collets. Automatic loosening and tightening by turning the nut. Increased concentricity and tightening force thanks to special nut. Reduced vibration level during work.

Type of work: CNC machines.



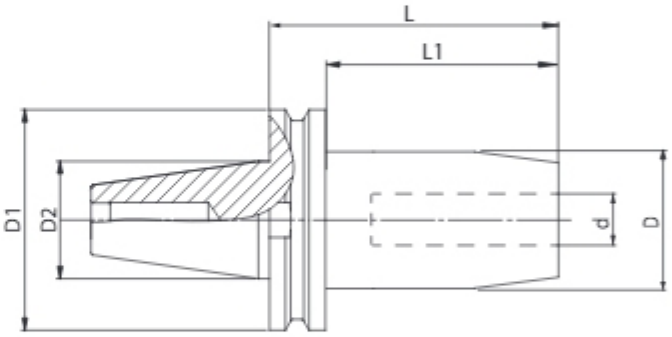

Catalogue number	Type	d	D	L	L1	D1	D2	
TCNH.1006	ISO 30 Hydro	10	30	95	75,9	50	31,75	+
TCNH.1007	ISO 30 Hydro	12	32	95	75,9	50	31,75	+
TCNH.1008	ISO 30 Hydro	16	42	100	80,9	50	31,75	+
TCNH.1009	ISO 30 Hydro	20	42	100	80,9	50	31,75	+
TCNH.1010	ISO 30 Hydro	25	52	110	90,9	50	31,75	+

Collet chucks are offered without mounting bolts.

List of mounting bolts on page 9.12.

HSK 63F

Clamping arbor, type **HSK 63F** designed for mounting tools and sets of tools with axial hole. The arbor is equipped with precise conical hollow grip according to DIN 69893 and protection against rotation of the tools on the pilot part. Reduced vibration level thanks to precise balancing.

Type of work: CNC machines equipped with automatic tool magazine with feeder.

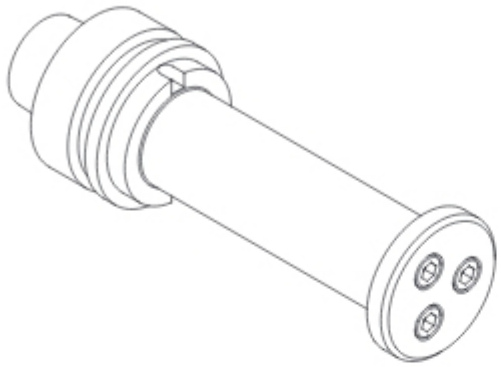

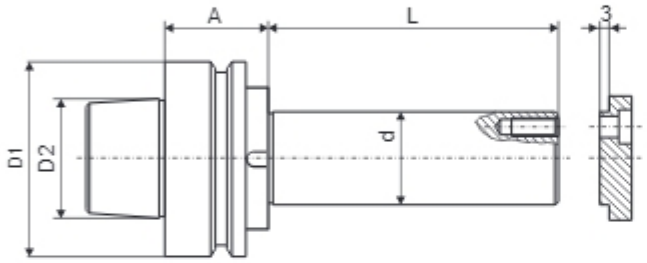

CNC

9

Catalogue number	Type	d mm	D1 mm	L	A	D2	
TCNC.1011	HSK 63	30	63	70	33	38	•
TCNC.1012	HSK 63	30	63	93	33	38	•
TCNC.1013	HSK 63	30	63	93	42	38	+
TCNC.1014	HSK 63	30	63	103	33	38	•
TCNC.1015	HSK 63	30	63	103	42	38	•
TCNC.1016	HSK 63	40	63	93	33	38	•
TCNC.1017	HSK 63	40	63	93	42	38	+
TCNC.1018	HSK 63	40	63	103	33	38	+
TCNC.1019	HSK 63	40	63	103	42	38	+
TCNC.1020	HSK 63	40	63	123	33	38	+
TCNC.1021	HSK 63	40	63	123	42	38	+

Tools should be selected according to dimension recommendation (tool diameter) and weight recommendation according to producer's suggestions.

HSK 85

Clamping arbor, type **HSK 85** designed for mounting tools and sets of tools with axial hole. The arbor is equipped with precise conical grip HSK 85. Reduced vibration level thanks to precise balancing. Equipped with protection against rotation of the tools on the pilot part. Works together with saw blades, cutter heads cutters and sets of cutter heads and cutters.

Type of work: CNC machines with HSK 85 clamping.

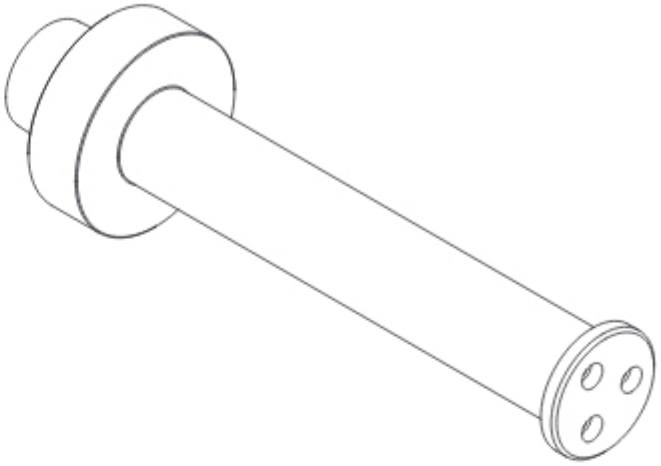

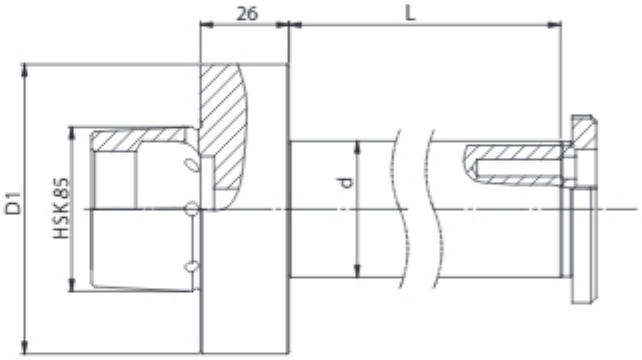

Catalogue number	Type	d mm	D1 mm	L	
TCNC.1109	HSK 85	30	85	60	+
TCNC.1110	HSK 85	30	85	90	+
TCNC.1112	HSK 85	30	85	130	+
TCNC.1079	HSK 85	40	85	60	•
TCNC.1078	HSK 85	40	85	90	•
TCNC.1107	HSK 85	40	85	100	+
TCNC.1050	HSK 85	40	85	130	•
TCNC.1108	HSK 85	40	85	150	+
TCNC.1086	HSK 85	40	85	180	+
TCNC.1120	HSK 85	50	85	60	+
TCNC.1119	HSK 85	50	85	90	+
TCNC.1121	HSK 85	50	85	100	+
TCNC.1122	HSK 85	50	85	130	+
TCNC.1123	HSK 85	50	85	150	+
TCNC.1124	HSK 85	50	85	180	+

Tools should be selected according to dimension recommendation (tool diameter) and weight recommendation according to producer's suggestions.

ISO 30

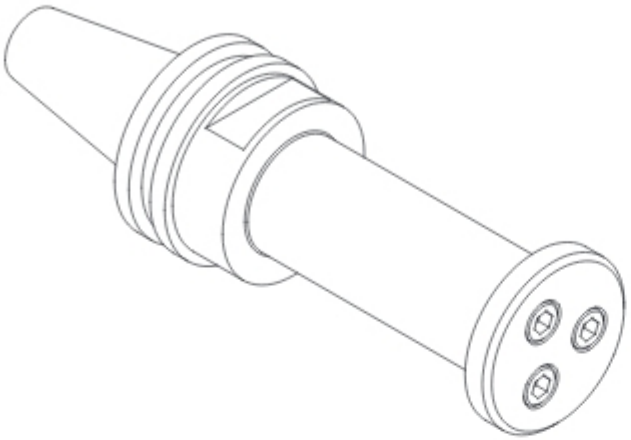

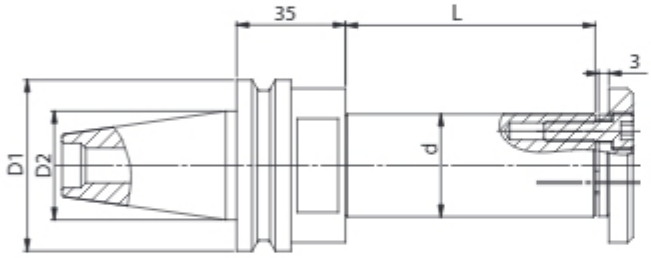

Clamping arbor, type **ISO 30** designed for mounting tools and sets of tools with axial hole. The arbor is equipped with precise conical grip according to DIN 69871 without necks and cuts. Works together with saw blades, cutter heads cutters and sets of cutter heads and cutters.

Type of work: CNC machines.

CNC

Catalogue number	Type	d mm	D1 mm	L	D2 mm	
TCNC.1022	ISO 30	30	50	73	30	+
TCNC.1023	ISO 30	30	50	93	30	+
TCNC.1024	ISO 30	30	50	103	30	+
TCNC.1025	ISO 30	30	50	123	30	+
TCNC.1026	ISO 30	40	50	73	38	+
TCNC.1027	ISO 30	40	50	93	38	+
TCNC.1028	ISO 30	40	50	103	38	+

Tools should be selected according to dimension recommendation (tool diameter) and weight recommendation according to producer's suggestions.

Collet chucks are offered without mounting bolts.
List of mounting bolts on page 9.12.

Precision collet

Precision collet with increased manufacturing accuracy (0,008 mm), type ER designed for clamping systems. Produced according to DIN ISO 15488-B (DIN 6499-B). Equipped with double-slot clamping system increasing mounting concentricity. Automatically tightened and loosened.

Type of work: collet chucks type HSK 50F, HSK 63F and ISO 30 with a nut.

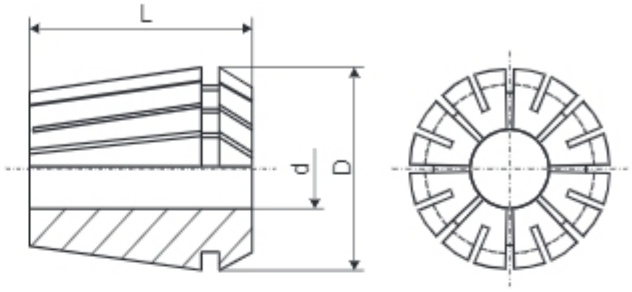

Catalogue number	Type	D	L	d	
U0010001	ER 32	33	40	4	+
U0010002				5	+
U0010003				6	+
U0010004				8	+
U0010005				10	+
U0010006				12	+
U0010007				14	+
U0010008				16	+
U0010009				18	+
U0010010				20	+
U0010012	ER 40	41	46	4	+
U0010013				5	+
U0010014				6	+
U0010015				8	+
U0010016				10	+
U0010017				12	+
U0010018				14	+
U0010019				16	+
U0010020				18	+
U0010021				20	+
U0010022				25	+

Precision collet pressure range = d - 1mm.

Bolts for collet chucks and grips ISO

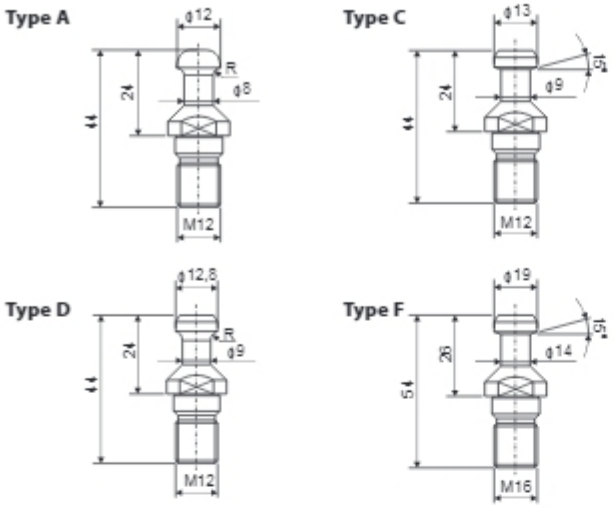

Type A - TCNC.1043 - **Machine**:
Biesse ab Bj. 09/1992, Masterwood (HSD)

Type C - TCNC.1045 - **Machine**:
IMA, Maka, Reichenbacher, Weeke, Busellato

Type D - TCNC.1046 - **Machine**:
CMS

Type F - TCNC.1051 - **Machine**:
IMA, Maka, Reichenbacher, Stegherr

Tornado

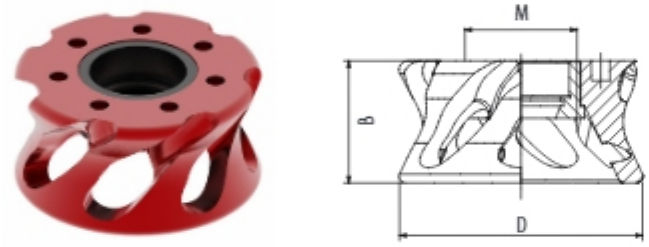

Tornado is a spiral chip flow system. It works with HSK 50F, HSK 63F and ISO 30 collet chucks and guarantees effective chip flow, excellent working precision and noise reduction of the whole system.
The body is made from light and strong materials.
Replaces a standard nut.
Recommended for milling and nesting.

Catalogue number	Type	Sleeve type	D mm	B mm	M		
U0020001	Tornado	ER 32	98	44	40x1,5	P	•
U0020002	Tornado	ER 40	98	47	50x1,5	P	•
U0020004	Tornado	ER 32	98	44	40x1,5	L	+
U0020005	Tornado	ER 40	98	47	50x1,5	L	+

Accesories



Stand for assembling and disassembling tools in holders - guarantees safe, easy and stable nut loosening and tightening.
Hook knife - for nut tightening.
Torque wrench - allows for fixing proper torque during tool installation in order to avoid destroying elements and prevent loose assembly.

Catalogue number	Type	Socket type	Sleeve type	D mm (sleeve nuts)	
WHAI02728	Stand for assembling and disassembling tools in holders	ISO 30, HSK 50	-	-	+
WHAI02729	Stand for assembling and disassembling tools in holders	ISO 40, HSK 63	-	-	+
WHAI02730	Stand for assembling and disassembling tools in holders	HSK 85	-	-	+
WHAI2986	Fixing wrench		ER 32	50	•
WHAI2721	Fixing wrench		ER 40	63	•
WHAI02733	Torque wrench head, 1/2 inch groove		ER 32	50	+
WHAI02734	Torque wrench head, 1/2 inch groove		ER 40	63	+
WHAI02802	Torque wrench (60 Nm - 300 Nm)		-	-	+

Hydro sleeve type TK

Hydro sleeve, type **TK** (key regulated) is designed for multiple mounting of tools with a bore. Clamping the sleeve on the spindle takes place instantly, by turning the hexagonal key a few times.
TK hydro sleeve guarantees easy change of a tool mounted on the sleeve, fixed to the sleeve's flange with 3 bolts. Serial positioning of tools. Hydro sleeves, type TK is a closed hydro system, permanently tightened, filled and ready to use. Pressure generated with regulation screw and key.

L_{max} = 160 mm
$L1_{max}$ = 135 mm



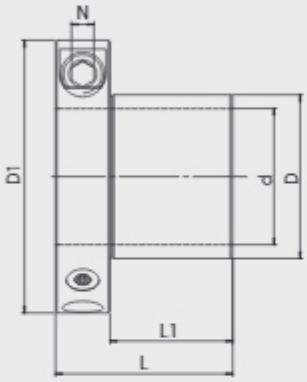

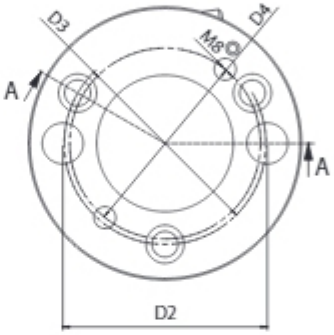

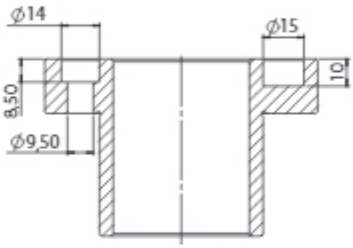

Catalogue number	Type	D mm	d mm	L mm	L1 mm	D1 mm	D2 mm	D3 mm	D4 mm	N mm	
TK-50/40-75	TK	50	40	75	55	100	65	64	70	8	+
TK-60/40-55	TK	60	40	55	35	100	75	74	70	8	•
TK-60/40-75	TK	60	40	75	55	100	75	74	70	8	•
TK-60/40-95	TK	60	40	95	75	106	75	74	70	8	•
TK-60/40-115	TK	60	40	115	95	106	75	74	70	8	•
TK-60/40-140	TK	60	40	140	115	112	75	74	70	10	+
TK-60/50-55	TK	60	50	55	35	100	75	74	70	8	•
TK-60/50-75	TK	60	50	75	55	100	75	74	70	8	•
TK-60/50-95	TK	60	50	95	75	106	75	74	70	8	•
TK-60/50-115	TK	60	50	115	95	106	75	74	70	8	•
TK-60/50-140	TK	60	50	140	115	112	75	74	70	10	+

Catalogue number	Type	D mm	d	L mm	L1 mm	D1 mm	D2 mm	D3 mm	D4 mm	N mm	
TK-50/1-1/2-95	TK	50	1 1/2"	95	75	106	65	64	70	8	+
TK-60/1-13/16-75	TK	60	1 13/16"	75	55	100	75	74	70	8	+
TK-65/2-1/8-95	TK	65	2 1/8"	95	75	106	80	80	75	8	+

Hydro sleeve includes 3 fixing bolts M8x30 DIN 912.

More information on hydro systems on pages 3.52 and 5.23.

Spare and extra parts, including locking collar and fixing bolts on page 9.23.

Hydro sleeve type TKG



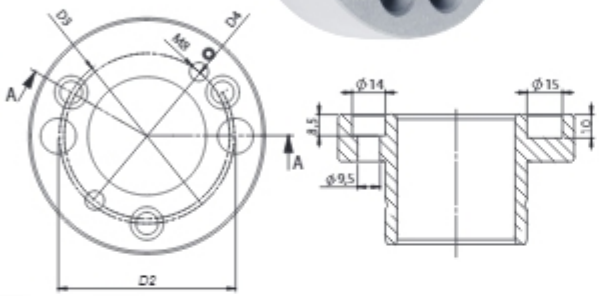

Hydro sleeve, type **TKG** (key regulated, with a thread) is designed for multiple mounting of tools with a bore. Clamping the sleeve on the spindle takes place instantly, by turning the hexagonal key a few times.

TKG hydro sleeve guarantees easy change of a tool mounted on the sleeve and protected with a ring nut with 3 protection screws.

Serial positioning of tools. Hydro sleeves, type TK is a closed hydro system, permanently tightened, filled and ready to use. Pressure generated with regulation screw and key.

L_{max} = 160 mm
$L1_{max}$ = 135 mm

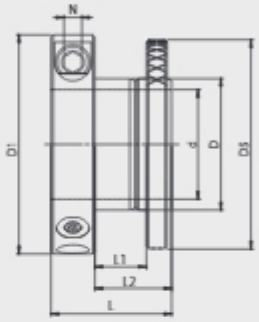

Catalogue number	Type	D mm	d mm	L mm	L1 mm	L2 mm	D1 mm	D2 mm	D3 mm	D4 mm	D5 mm	N mm	
TKG-50/40-75	TKG	50	40	75	40	55	100	65	64	70	85	8	+
TKG-60/40-75	TKG	60	40	75	40	55	100	75	74	70	95	8	+
TKG-60/40-95	TKG	60	40	95	60	75	106	75	74	70	95	8	+
TKG-60/40-115	TKG	60	40	115	80	95	106	75	74	70	95	8	+
TKG-60/40-140	TKG	60	40	140	100	115	112	75	74	70	95	10	+
TKG-60/50-75	TKG	60	50	75	40	55	100	75	74	70	95	8	+
TKG-60/50-95	TKG	60	50	95	60	75	106	75	74	70	95	8	+
TKG-60/50-115	TKG	60	50	115	80	95	106	75	74	70	95	8	+
TKG-60/50-140	TKG	60	50	140	100	115	112	75	74	70	95	10	+

Catalogue number	Type	D mm	d	L mm	L1 mm	L2 mm	D1 mm	D2 mm	D3 mm	D4 mm	D5 mm	N mm	
TKG-50/1-1/2-95	TKG	50	1 1/2"	95	60	75	106	65	64	70	85	8	+
TKG-50/1-1/2-140	TKG	50	1 1/2"	140	105	120	106	65	64	70	85	8	+
TKG-60/1-13/16-75	TKG	60	1 13/16"	75	40	55	100	75	74	70	95	8	+
TKG-60/1-13/16-115	TKG	60	1 13/16"	115	80	95	106	75	74	70	95	8	+
TKG-60/1-13/16-140	TKG	60	1 13/16"	140	105	115	112	75	74	70	95	10	+
TKG-65/1-13/16-95	TKG	65	1 13/16"	95	60	75	106	80	80	75	100	8	+
TKG-65/2-1/8-95	TKG	65	2 1/8"	95	60	75	106	80	80	75	100	8	+

Hydro sleeve includes ring nut and 3 protection screws M6x10.

Spare and extra parts on page 9.23.

More information on hydro systems on pages 3.52 and 5.23.

Hydro sleeve type TH

Hydro sleeve, type **TH** (pump regulated) is designed for multiple mounting of tools with a bore.
TH hydro sleeve guarantees easy change of a tool mounted on the sleeve, fixed to the sleeve's flange with 3 bolts.
Serial positioning of tools. Pressure generated with high--pressure grease pump. Works also with longer pilot parts.

L_{max} = 260 mm
$L1_{max}$ = 240 mm

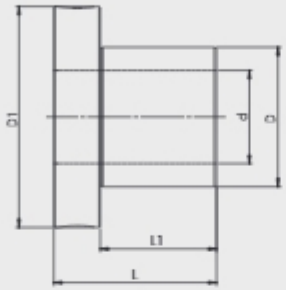



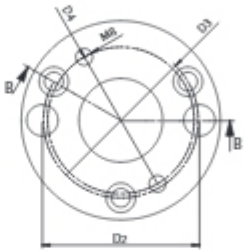

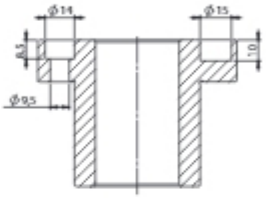

Catalogue number	Type	D mm	d mm	L mm	L1 mm	D1 mm	D2 mm	D3 mm	D4 mm	
TH-59,96/45-55	TH	59,96	45	55	35	95	75	74	70	+
TH-59,96/45-75	TH	59,96	45	75	55	95	75	74	70	+
TH-59,96/45-95	TH	59,96	45	95	75	95	75	74	70	+
TH-59,96/50-55	TH	59,96	50	55	35	95	75	74	70	+
TH-59,96/50-75	TH	59,96	50	75	55	95	75	74	70	+
TH-59,96/50-95	TH	59,96	50	95	75	95	75	74	70	+
TH-60/40-55	TH	60	40	55	35	95	75	74	70	•
TH-60/40-75	TH	60	40	75	55	95	75	74	70	•
TH-60/40-95	TH	60	40	95	75	95	75	74	70	•
TH-60/40-115	TH	60	40	115	95	95	75	74	70	+
TH-60/40-165	TH	60	40	165	145	95	75	74	70	+
TH-60/45-55	TH	60	45	55	35	95	75	74	70	•
TH-60/45-75	TH	60	45	75	55	95	75	74	70	•
TH-60/45-95	TH	60	45	95	75	95	75	74	70	+
TH-60/50-55	TH	60	50	55	35	95	75	74	70	•
TH-60/50-75	TH	60	50	75	55	95	75	74	70	•
TH-60/50-95	TH	60	50	95	75	95	75	74	70	•
TH-60/50-115	TH	60	50	115	95	95	75	74	70	•
TH-60/50-140	TH	60	50	140	120	95	75	74	70	•
TH-60/50-190	TH	60	50	190	170	95	75	74	70	•
TH-60/50-230	TH	60	50	230	210	95	75	74	70	+
TH-70/60-55	TH	70	60	55	35	105	85	86	85	+
TH-70/60-75	TH	70	60	75	55	105	85	86	85	•
TH-70/60-230	TH	70	60	230	210	105	85	86	85	+

Hydro sleeve includes 3 fixing bolts M8x30 DIN 912.

More information on hydro systems on pages 3.52 and 5.23.

Spare and extra parts, including safety collar and fixing bolts on page 9.23.

Hydro sleeve type TH



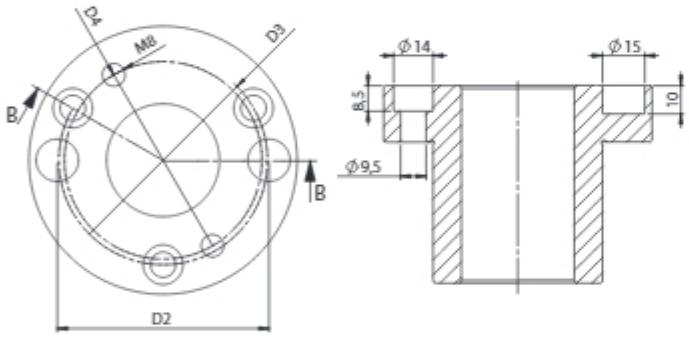

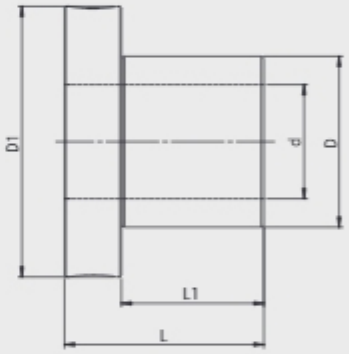

9

Catalogue number	Type	D mm	d	L mm	L1 mm	D1 mm	D2 mm	D3 mm	D4 mm	
TH-50/1-1/2-95*	TH	50	1 1/2"	95	60	85	65	64	-	+
TH-60/1-13/16-75	TH	60	1 13/16"	75	55	95	75	74	70	+
TH-65/1-13/16-95	TH	65	1 13/16"	95	75	100	80	80	75	+
TH-65/1-13/16-140	TH	65	1 13/16"	140	120	100	80	80	75	+

Hydro sleeve includes 3 fixing bolts M8x30 DIN 912.

* No safety pins possible.

Spare and extra parts, including safety collar and fixing bolts on page 9.23.

More information on hydro systems on pages 3.52 and 5.23.

Hydro sleeve typ THG

Hydro sleeve, type **THG** (pump regulated, with a thread) is designed for multiple mounting of tools with a bore.
THG hydro sleeve guarantees easy change of a tool mounted on the sleeve and protected with a ring nut with 3 protection screws.
Serial positioning of tools. Pressure generated with high--pressure grease pump. Works also with longer pilot parts.

L_{max} = 260 mm
$L1_{max}$ = 225 mm

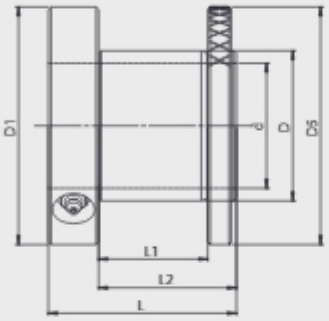



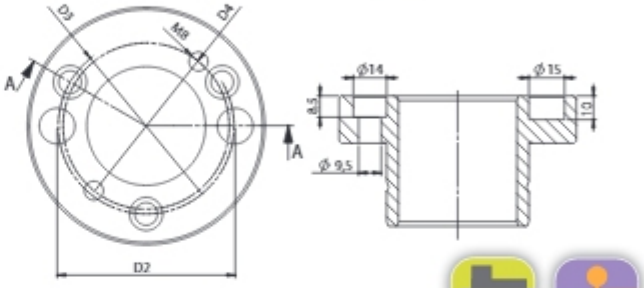

Catalogue number	Type	D mm	d mm	L mm	L1 mm	L2 mm	D1 mm	D2 mm	D3 mm	D4 mm	D5 mm	
THG-50/40-75*	THG	50	40	75	40	55	85	65	64	-	85	+
THG-50/40-115*	THG	50	40	115	80	95	85	65	64	-	85	+
THG-59,96/45-75	THG	59,96	45	75	40	55	95	75	74	70	95	+
THG-59,96/45-95	THG	59,96	45	95	60	75	95	75	74	70	95	+
THG-59,96/45-115	THG	59,96	45	115	80	95	95	75	74	70	95	+
THG-59,96/45-140	THG	59,96	45	140	105	120	95	75	74	70	95	+
THG-59,96/45-190	THG	59,96	45	190	155	170	95	75	74	70	95	+
THG-59,96/50-75	THG	59,96	50	75	40	55	95	75	74	70	95	+
THG-59,96/50-95	THG	59,96	50	95	60	75	95	75	74	70	95	+
THG-59,96/50-115	THG	59,96	50	115	80	95	95	75	74	70	95	+
THG-59,96/50-140	THG	59,96	50	140	105	120	95	75	74	70	95	+
THG-59,96/50-190	THG	59,96	50	190	155	170	95	75	74	70	95	+
THG-60/40-75	THG	60	40	75	40	55	95	75	74	70	95	•
THG-60/40-95	THG	60	40	95	60	75	95	75	74	70	95	•
THG-60/40-115	THG	60	40	115	80	95	95	75	74	70	95	•
THG-60/40-140	THG	60	40	140	105	120	95	75	74	70	95	+
THG-60/40-190	THG	60	40	190	155	170	95	75	74	70	95	+
THG-60/40-220	THG	60	40	220	185	200	95	75	74	70	95	+
THG-60/45-75	THG	60	45	75	40	55	95	75	74	70	95	•
THG-60/45-95	THG	60	45	95	60	75	95	75	74	70	95	•
THG-60/45-115	THG	60	45	115	80	95	95	75	74	70	95	•
THG-60/45-140	THG	60	45	140	105	120	95	75	74	70	95	+
THG-60/45-190	THG	60	45	190	155	170	95	75	74	70	95	+

Hydro sleeve includes ring nut and 3 protection screws M6x10.

* No safety pins possible.

Spare and extra parts on page 9.23.

More information on hydro systems on pages 3.52 and 5.23.

Hydro sleeve type THG

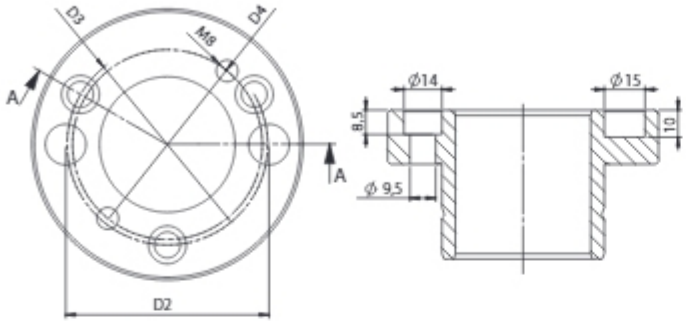

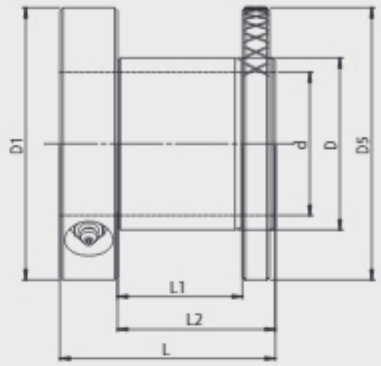

Catalogue number	Type	D mm	d mm	L mm	L1 mm	L2 mm	D1 mm	D2 mm	D3 mm	D4 mm	D5 mm	
THG-60/50-75	THG	60	50	75	40	55	95	75	74	70	95	•
THG-60/50-95	THG	60	50	95	60	75	95	75	74	70	95	•
THG-60/50-115	THG	60	50	115	80	95	95	75	74	70	95	•
THG-60/50-140	THG	60	50	140	105	120	95	75	74	70	95	+
THG-60/50-190	THG	60	50	190	155	170	95	75	74	70	95	+
THG-60/50-240	THG	60	50	240	205	220	95	75	74	70	95	+
THG-70/60-75	THG	70	60	75	40	55	105	85	86	85	105	+
THG-70/60-140	THG	70	60	140	105	120	105	85	86	85	105	+
THG-70/60-190	THG	70	60	190	155	170	105	85	86	85	105	+

Catalogue number	Type	D mm	d	L mm	L1 mm	L2 mm	D1 mm	D2 mm	D3 mm	D4 mm	D5 mm	
THG-50/1-1/2-95*	THG	50	1 1/2"	95	60	75	85	65	64	-	85	+
THG-50/1-1/2-140*	THG	50	1 1/2"	140	105	120	85	65	64	-	85	+
THG-50/1-1/2-190*	THG	50	1 1/2"	190	155	170	85	65	64	-	85	+
THG-60/1-13/16-75	THG	60	1 13/16"	75	40	55	95	75	74	70	95	+
THG-60/1-13/16-115	THG	60	1 13/16"	115	80	95	95	75	74	70	95	+
THG-60/1-13/16-190	THG	60	1 13/16"	190	155	170	95	75	74	70	95	+
THG-65/1-13/16-95	THG	65	1 13/16"	95	60	75	100	80	80	75	100	+
THG-65/1-13/16-140	THG	65	1 13/16"	140	105	120	100	80	80	75	100	+
THG-65/1-13/16-190	THG	65	1 13/16"	190	155	170	100	80	80	75	100	+
THG-65/2-1/8-95	THG	65	2 1/8"	95	60	75	100	80	80	75	100	+
THG-65/2-1/8-140	THG	65	2 1/8"	140	105	120	100	80	80	75	100	+
THG-65/2-1/8-190	THG	65	2 1/8"	190	155	170	100	80	80	75	100	+

Hydro sleeve includes ring nut and 3 protection screws M6x10.

* No safety pins possible.

Spare and extra parts on page 9.23.

More information on hydro systems on pages 3.52 and 5.23.

Hydro sleeve type TI

Hydro sleeve, type **TI** designed for precise mounting of tools with a bore. Tools are placed on the precise pilot part. Serial positioning of tools. Pressure generated with regulation screw and a key. The sleeve works on hexagonal machine spindle. Pressure system with increased durability and efficiency.

L_{max} = 96 mm



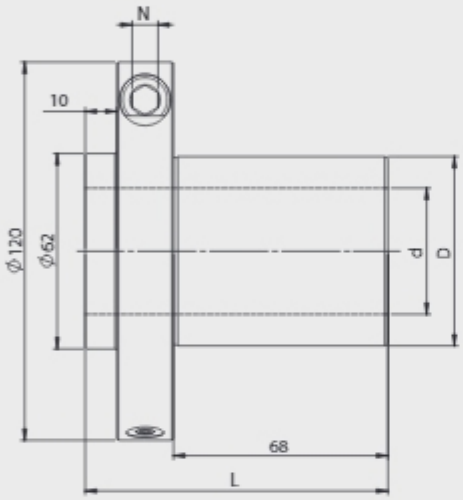

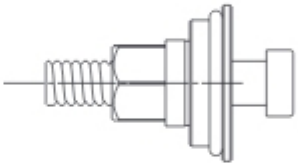

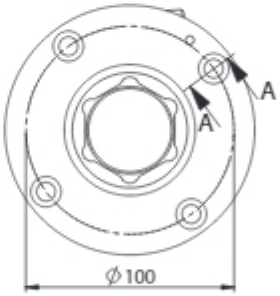

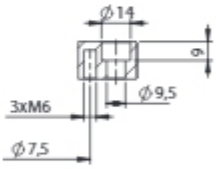

9

Catalogue number	Type	D	d	L	N	
TI-60/40-96	TI	60	40	96	8	•

Spare parts for Hydro Sleev type TI

Cat. nr	Name	Dimensions		
WHAI1111	Spindle protection	49,5 x 79		•
WHAS00187	Screw	M14 x 70		•
WHAP05689	Safety ring	120/60 x 9,5		+
WHAS00186	Screw DIN 912	M8 x 75		+

Cat. nr	Name	Dimensions		
WHAP02768	Spacer ring	120/60 x 1,0		+
WHAP05686	Spacer ring	120/60 x 2,0		+
WHAP05688	Spacer ring	120/60 x 5,0		+
WHAP02889	Spacer ring	120/60 x 10,0		+

Hydro sleeve includes 4 fixing bolts M8x30 DIN 912.

Spare and extra parts on page 9.23.

More information on hydro systems on pages 3.52 and 5.23.

Hydro sleeve type TI2

Hydro sleeve, type **TI2** designed for precise mounting of tools with a bore. Tools are placed on the precise pilot part. Serial positioning of tools. Pressure generated with regulation screw and a key. The sleeve works on hexagonal machine spindle. Pressure system with increased durability and efficiency.

L_{max} = 92 mm





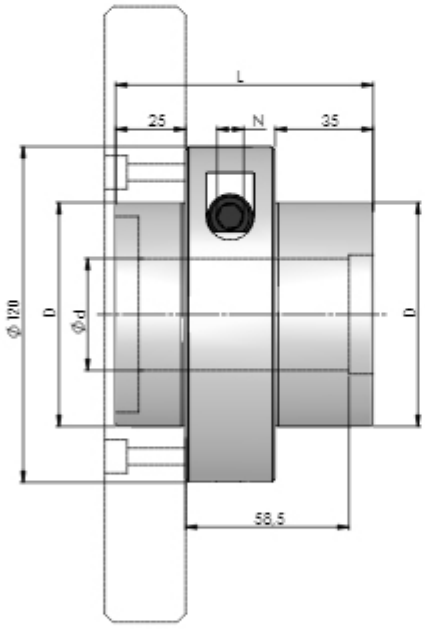

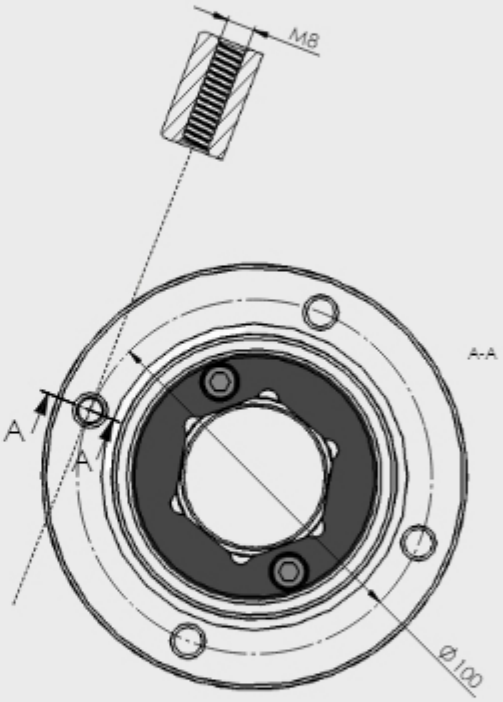

9

Catalogue number	Type	D	d	L	N	
TI2-80/40-92	TI2	80	40	92	8	•

Spare parts for Hydro Sleev type TI2

Cat. nr	Name	Dimensions		
WHAI2341	Spindle protection	54,9 x 84		•
WHAI1458A	Spacer ring	70x8,5/42		+
WHAS00187	Screw	M14 x 70		•

Hydro sleeve includes 4 fixing bolts M8x45 DIN 912.

Spare and extra parts on page 9.23.

More information on hydro systems on pages 3.52 and 5.23.

Hydro sleeve type TI3

Hydro sleeve, type **TI3** designed for precise mounting of tools with a bore. Tools are placed on the precise pilot part. Serial positioning of tools. Pressure generated with regulation screw and a key. The sleeve works on hexagonal machine spindle. Pressure system with increased durability and efficiency.

L_{max} = 92 mm

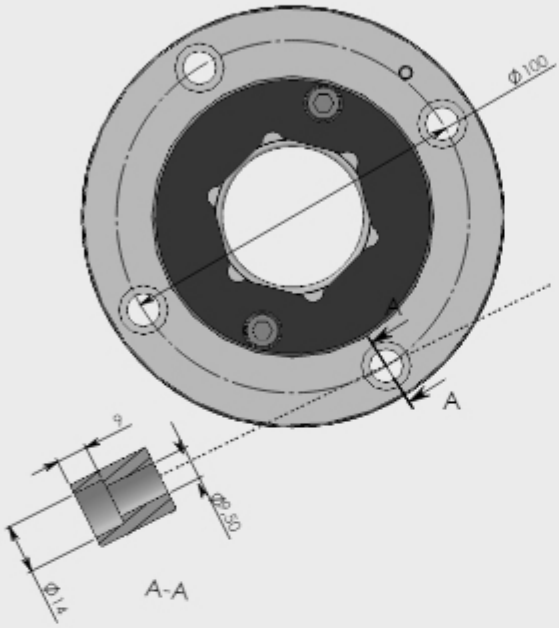

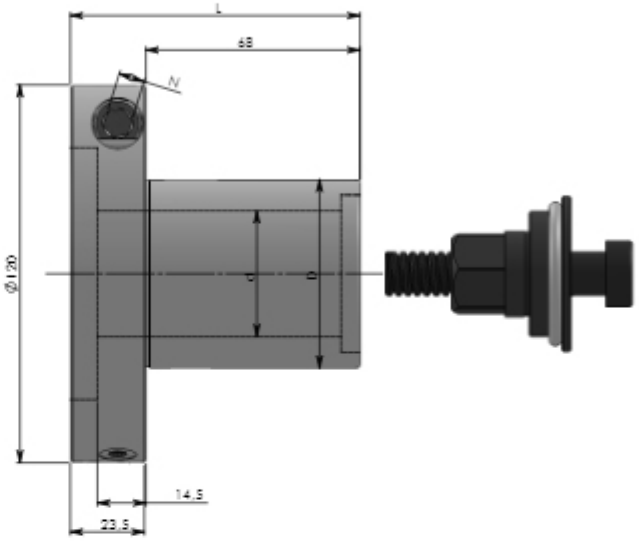

9

Catalogue number	Type	D	d	L	N	
TI3 -60/40-92	TI3	60	40	92	8	+

Spare parts for Hydro Sleev type TI

Cat. nr	Name	Dimensions		
WHAI1111	Spindle protection	49,5 x 79		•
WHAS00187	Screw	M14 x 70		•
WHAP05689	Safety ring	120/60 x 9,5		•
WHAS00186	Screw DIN 912	M8 x 75		+

Hydro sleeve includes 4 fixing bolts M8x30 DIN 912.

Spare and extra parts on page 9.23.

Cat. nr	Name	Dimensions		
WHAP02768	Spacer ring	120/60 x 1,0		•
WHAP05686	Spacer ring	120/60 x 2,0		•
WHAP05688	Spacer ring	120/60 x 5,0		•
WHAP02889	Spacer ring	120/60 x 10,0		•
WHAI1458	Spindle lock	80/8,5		+

More information on hydro systems on pages 3.52 and 5.23.

Hydro sleeves type THL / THLG





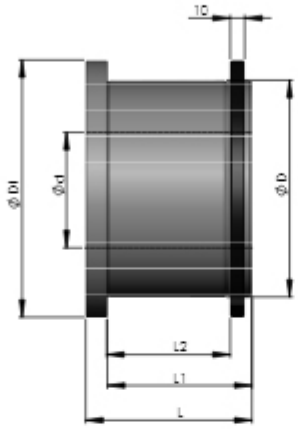

Hydro sleeves, type **THL** and **THLG** (pump operated) are designed for multiple mounting of tools with a bore.

THL hydro sleeve guarantees easy change of a tool mounted on the sleeve, which should be attached to the collar with 3 fixing screws.

THLG hydro sleeve guarantees easy change of a tool mounted on the sleeve, which is protected with a ring nut with 3 protection screws preventing it from spontaneous unlocking.

L_{max} = 260 mm $L1_{max}$ = 230 mm

- Serial positioning of tools
- Pressure generated with high-pressure grease pump.
- Works also with longer pilot parts

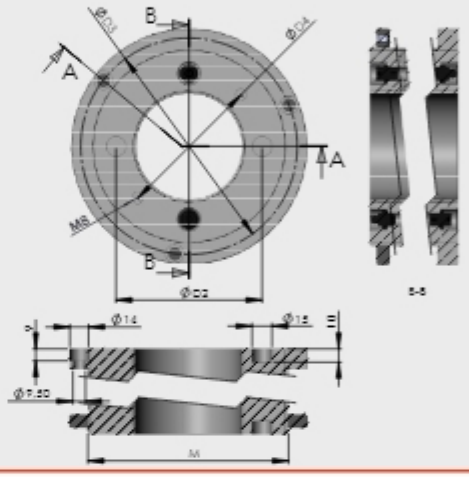

Catalogue number	Type	D mm	d mm	L mm	L1 mm	L2 mm	D1 mm	D2 mm	D3 mm	D4 mm	
THL-100/45-75	THL	100	45	75	60	-	128	-	113	70	+
THL-100/45-95	THL	100	45	95	80	-	128	-	113	70	+
THL-100/50-55	THL	100	50	55	40	-	128	75	113	70	+
THL-100/50-75	THL	100	50	75	60	-	128	75	113	70	+
THL-100/50-95	THL	100	50	95	80	-	128	75	113	70	+
THL-100/50-115	THL	100	50	115	100	-	128	75	113	70	+
THL-100/50-140	THL	100	50	140	125	-	128	75	113	70	+
THL-110/60-115	THL	110	60	115	100	-	138	85	123	80	+
THL-130/70-140	THL	130	70	140	125	-	158	95	143	90	+
THL-130/80-115	THL	130	80	115	100	-	158	105	143	100	+
THL-130/80-140	THL	130	80	140	125	-	158	105	143	100	+

Catalogue number	Type	D mm	d	L mm	L1 mm	L2 mm	D1 mm	D2 mm	D3 mm	D4 mm	
THLG-100/45-75	THLG	100	45	75	60	45	128	-	113	70	+
THLG-100/50-75	THLG	100	50	75	60	45	128	75	113	70	+
THLG-100/50-95	THLG	100	50	95	80	65	128	75	113	70	+
THLG-100/50-115	THLG	100	50	115	100	85	128	75	113	70	+
THLG-100/50-140	THLG	100	50	140	125	110	128	75	113	70	+
THLG-130/80-115	THLG	130	80	115	100	85	158	105	143	100	+
THLG-130/80-140	THLG	130	80	140	125	110	158	105	143	100	+

More information on hydro systems on pages 3.52 and 5.23.

TK, TKG, TH, THG, THL, THLG

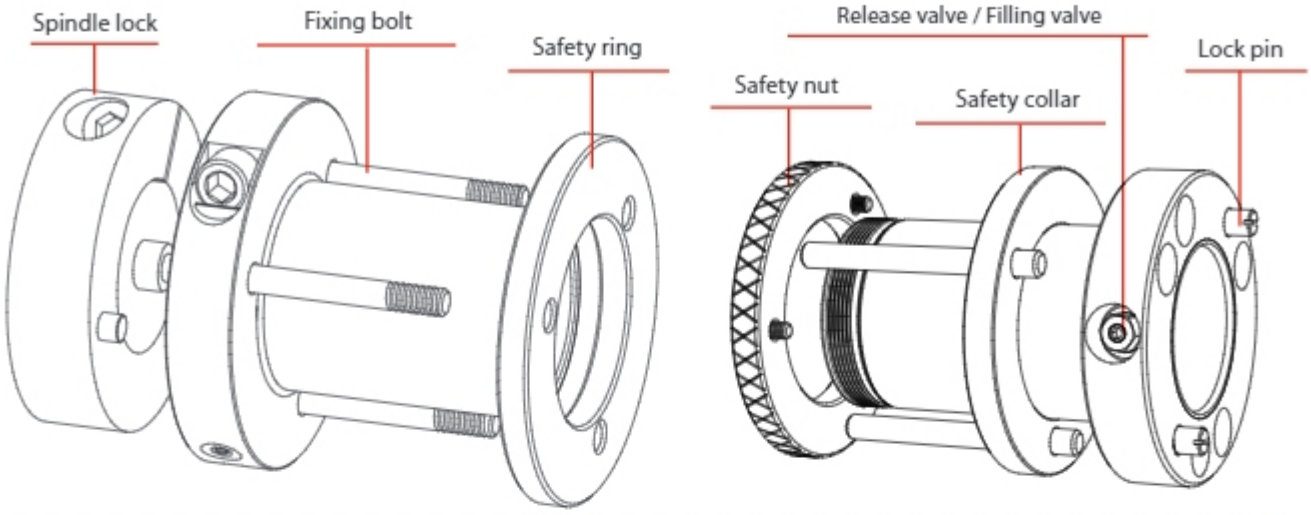

Safety ring

Safety ring used with fixing bolts, designer for hydro sleeves, type TK and TH.

Works with: TK, TH sleeves.

Catalogue number	d mm	D mm	M	
WHAP05685	50	85	8	•
WHAP05061	60	95	8	•
WHAP05683	65	100	8	•
WHAP05684	70	105	8	•



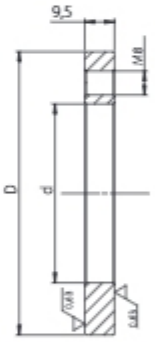

Fixing bolt

Fixing bolts designed for mounting tools on hydro sleeves type TK, TKG, TH, THG.

Works with: TK, TKG, TH, THG sleeves.

Catalogue number	Dimensions	
WHAS00188	M8 x 30	•
WHAS00189	M8 x 45	•
WHAS00190	M8 x 65	•
WHAS00186	M8 x 75	•
WHAS00191	M8 x 85	•
WHAS00192	M8 x 105	•
WHAS00193	M8 x 130	•
WHAS00194	M8 x 155	•
WHAS00016	M8 x 180	•
WHAS00077	M8 x 220	•



Safety nut

Safety nut in a set with 3 bolts M6x10 designed for hydro sleeves type TKG, THG. Designed for protecting the tools mounted on the sleeve from sliding apart.

Works with: TKG, THG sleeves.





Catalogue number	Dimensions	D mm	
WHAI02175	M50 x 1,5	85	+
WHAI02174	M60 x 1,5	95	•
WHAI02176	M65 x 1,5	100	+
WHAI02177	M70 x 1,5	105	+

Cat. number	Name	Dimensions		
WHAW00003	Safety screw	M6 x 10		•

Spacer ring

Spacer ring with improved manufacturing tolerance, designed for hydro sleeves type TK, TKG, TH, THG. Spacers set the tools on the sleeve and fill the empty space after mounting the tools.

Works with: TK, TKG, TH, THG sleeves.





Cat. number	d mm	D mm	B mm	
WHAP05695	50	85	1	•
WHAP05678	50	85	2	•
WHAP05696	50	85	5	•
WHAP05697	50	85	10	•
WHAP01839	60	95	1	•
WHAP03779	60	95	2	•
WHAP03780	60	95	5	•
WHAP04023	60	95	10	•
WHAP05679	65	100	1	•
WHAP05680	65	100	2	•
WHAP05681	65	100	5	•
WHAP05682	65	100	10	•
WHAP01858	70	105	1	•
WHAP01857	70	105	2	•
WHAP01856	70	105	5	•
WHAP01855	70	105	10	•

Safety collar

Safety collar protecting the tools mounted on the sleeve from rotating, designed for hydro tools type TKG and THG, usually used with saw blades.
Safety collar produced on customer's request, for a specific outer sleeve diameter (D) and sleeve length (L1).

Works with: TKG, THG sleeves.

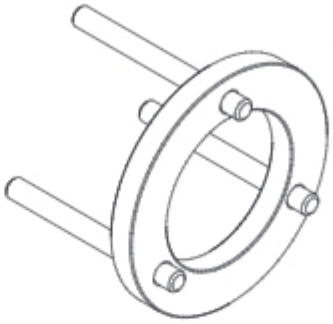

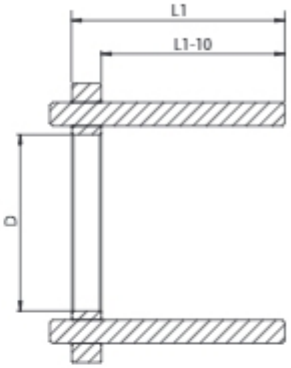

Spindle lock

Spindle lock protecting the hydro sleeves from rotating on the machine spindle, designed for hydro sleeves type TK, TKG, TH, THG and hydro heads type 1100-04 H, 1100-05 H, GP-01 H. Produced for a specific machine spindle diameter (d).

Works with: hydro cutter heads and sleeves.



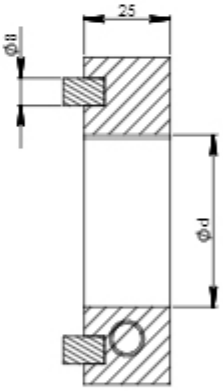

Cat. number	d mm	
ZAB-107	40	•
ZAB-081*	40	+
ZAB-083	45	+
ZAB-082	50	•
ZAB-084	60	+

Cat. number	d	
ZAB-081A	1 1/2"	+
ZAB-083A	1 13/16"	+
ZAB-085	2 1/8"	+

* For sleeve 50/40 only

Accesories

Cat. number	Name		Cat. number	Name	
WHAI1211	Lock pin	•	WHAI00029	High-pressure grease pump	+
WHAI00034	Release valve	•	WHAI01210	Greace pump connector	•
WHAI00033	Filling valve	•	WHAI00377	Grease	•

Sleeve for GO windows

Sleeve for windows, type **GO**, designed for mounting cutter heads and cutters for window profiles or other sets of cutters and cutter heads. The sleeve is equipped with precise pilot part. Special construction prevents the nut from loosening during work. The set includes a sleeve, nut and special spacer ring.

Type of work: CNC machines.

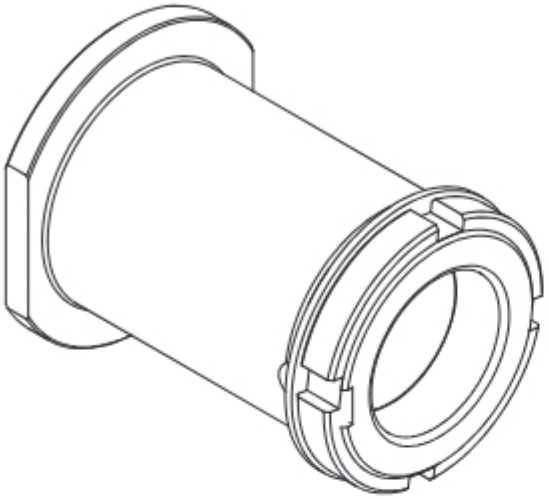

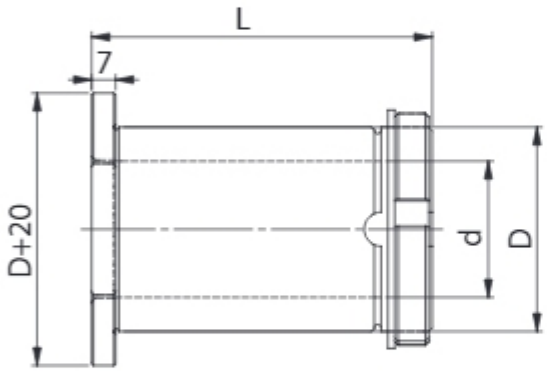

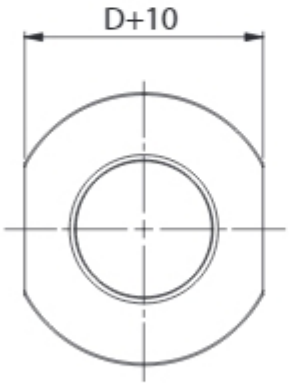

CNC

Catalogue number	Type	D mm	d mm	L mm		
WHAT00006	GO	60	30	45	R	+
WHAT00007	GO	60	30	100	R	+
WHAT00008	GO	60	40	45	R	+
WHAT00009	GO	60	40	100	R	+
WHAT00010	GO	60	50	45	R	+
WHAT00011	GO	60	50	100	R	+

Special sleeves

Special sleeves are designed for mounting cutter heads and brazed cutters. They are equipped with precise pilot part. The sleeves are offered on client's individual request.

Order should include:

- positioning diameter (D) or diameters range,
- bore diameters (d),
- type of tool working with the sleeve,
- type of machined material,
- other information relevant for designing and production process.

Type of work: CNC machines

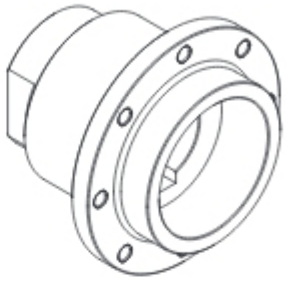

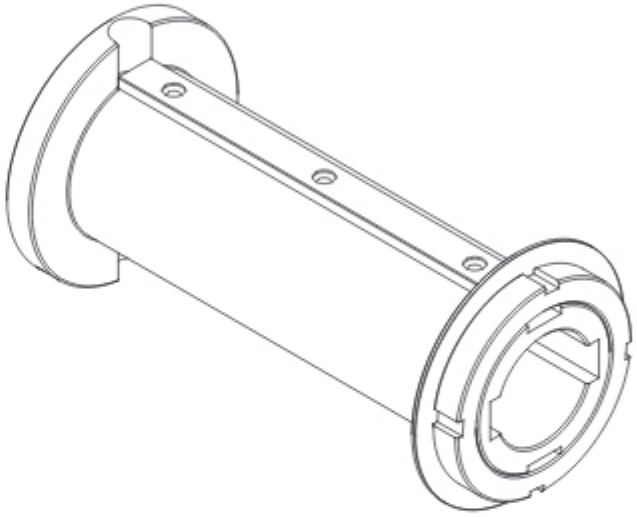

CNC

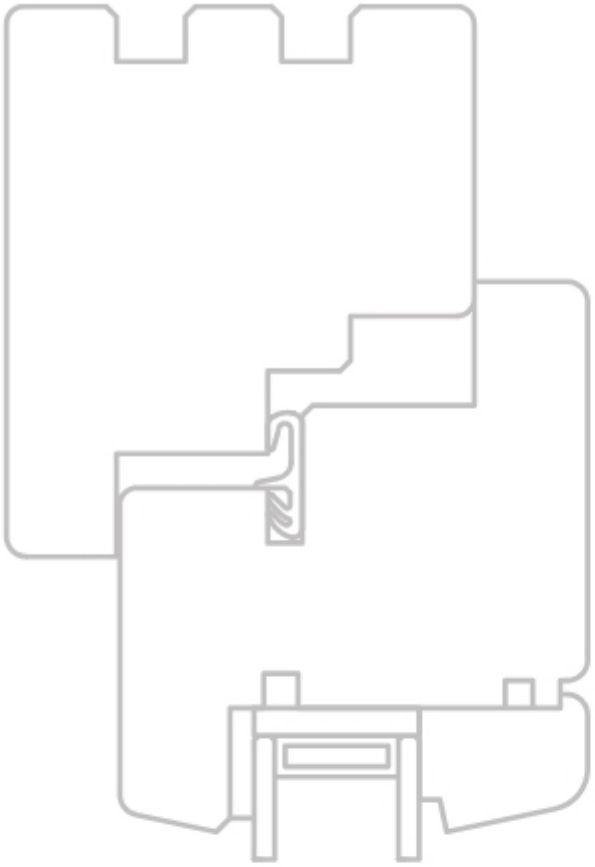

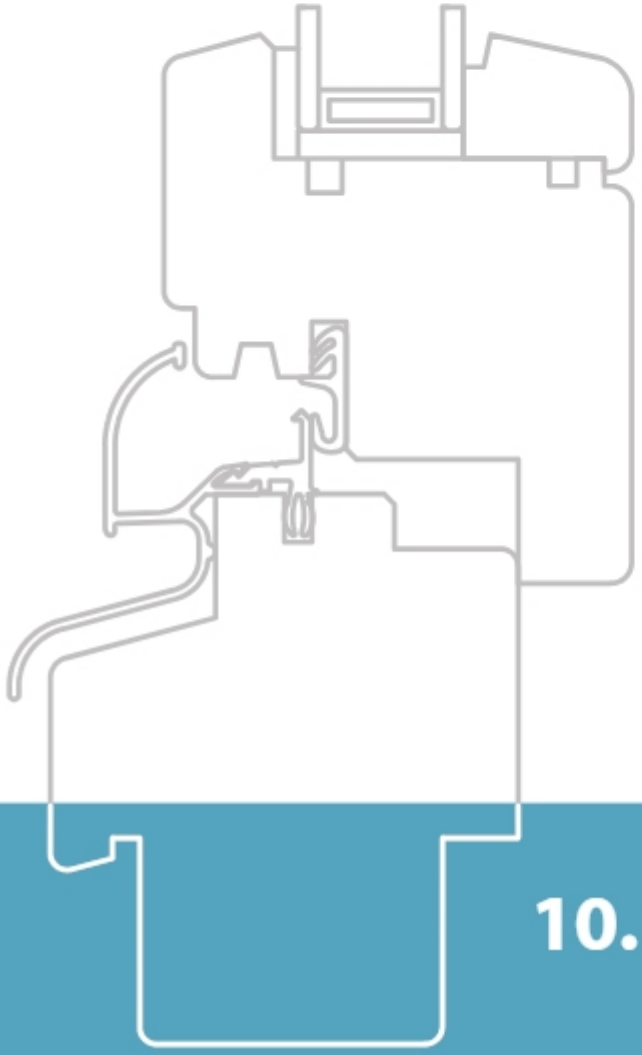



10. Windows and doors

Windows and doors

Set of brazed cutters with high speed steel tips (HSS) designed for professional machining of solid soft wood. Sets of brazed cutters with carbide (HM) tips and cutter heads with exchangeable inserts (HM) designed for professional machining of solid soft and hard wood, glued wood and other wood-based materials and plastics. They are used for machining flat surfaces and edge profiling to obtain a given window and door profile. We offer mainly sets as cutter heads with exchangeable inserts.

Single tools and sets are made from the highest quality high speed cutting steel in special heat treatment technology, which has been properly selected for the type of work, parameters and conditions prevailing during the machining, in order to guarantee proper work of the tool, both in standard and extreme conditions.

The tools are designed and manufactured with or without shear angle and optimized chip flow, mounted on sleeves or HSK shanks, designed for professional, very presice machining of solid wood and other wood-based materials. The HSK clamping construction guarantees reduced runout tolerance. Thanks to using HSK system allowing also for production of arch windows, we obtain high precision and very high quality of the machined surface. The tools work in automatic production process on CNC machines.

All types of tools are manufactured on modern CNC machines of world-renowned producers, which guarantee high accuracy and precision of the produced tools. The construction and production remains in accordance with all points of safety standard EN/PN-847-1 concerning tools for mechanical woodworking.

The *Windows and doors* chapter includes only example types of brazed cutters, cutter heads and sets with basic dimensions. On special request, we can suggest, design and produce a proper tools for the required type of work, material, parameters and conditions during machining. Time of production of catalogue sets marked with "+" usually does not exceed 10-15 working days. Special windows, made on client's request are produced within 15-18 working days after agreeing all technical and sales details.

Orders should include:

- window type or window section drawing,
- drip cap type,
- machine or work scheme,
- diameters and base distances of tools for tenoning and profilling,
- base surfaces position,
- window sill groove position,
- gasket type,
- floating mullion type,
- machined material type,
- profile drawing with dimensions or profile sample – in case of single sets,
- other information relevant for designing and production process.

Drip cap and seal types can be found on pages 10.32-10.35 of the catalogue.



Contents

10. WINDOWS AND DOORS

Pictograms 10.3

10.1 Sets for window batten 10.4

10.2 Sets for doube-glass windows 10.6

10.3 Universal systems for windows 2U and 3U 10.16

10.4 SCANDINAVIAN type window 10.28

10.5 Sets for windows on HSK shanks 10.31

10.6 Window components 10.32

10.7 Cutters and cutter heads for panel raising 10.36

10.8 Cutters and cutter heads for door tenons 10.38

Pictograms


solid dry softwood


solid dry hardwood


chipboard


glued wood



MDF



carbide



high-speed cutting steel



steel or aluminiuum body


HSK 85 clamping


flat surfaces


rebating


grooving


profiling


mechanical feed


quiet and steady work

- available / stock product
+ production time 9–15 working days.

Window batten cut-off

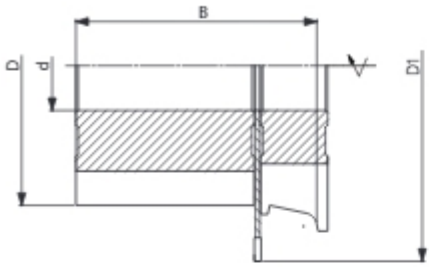

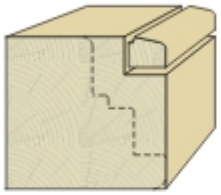

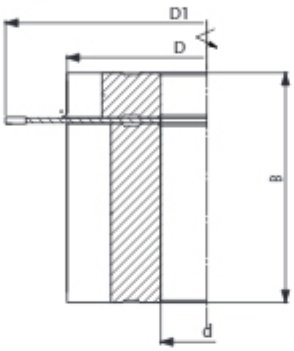



Set of tools with suitable number of cutting teeth, designed for window batten cut-off with profiling and pre-cutting window frame. The set includes profiling tools (HSS or HM) offered as brazed cutters or cutter heads with exchangeable inserts and cutting saw blades (HM). The set is offered on individual request.

Orders should include:
- D – base diameter,
- D1 – cutting saw blade diameter,
- D – bore diameter,
- B – semi-finished product width,
- window batten dimensions.

Type of work: window batten cut-off.

Material:
HSS solid softwood
HM solid hardwood



Window batten recovery

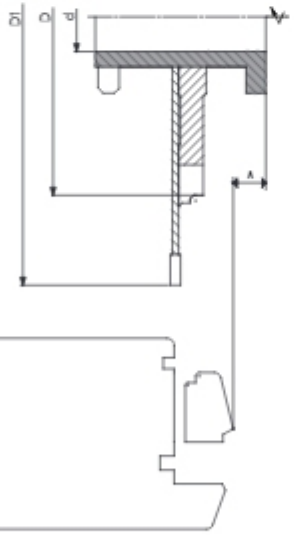

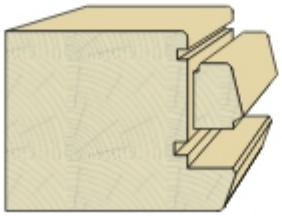

Set of tools with suitable number of cutting teeth, designed for window batten cut-off with profiling. The set is used as additional – cutting off set, when longitudinal, inner profile of window frame is used in one operation with window batten profile. The set includes profiling tools (HSS or HM) offered as brazed cutter or cutter head with exchangeable inserts and cutting saw blades (HM). The set is offered on individual request.

Orders should include:
- D – base diameter,
- D1 – cutting saw blade diameter,
- D – bore diameter,
- B – semi-finished product width,
- A – base – set position,
- window batten dimensions.

Type of work: window batten cut-off.

Material:
HSS solid softwood
HM solid hardwood



Direct cutting

Set of profile tools with suitable number of cutting teeth, designed for professional cutting of solid wood. The set is used for window batten finishing. The set includes profiling tools. The set is offered on individual request as brazed cutters or cutter heads. The set works on four-sided machines.

Orders should include:
- D – base diameter,
- D – bore diameter,
- window batten dimensions.

Type of work: window batten finishing.

Material:
- HSS solid softwood
- HM solid hardwood

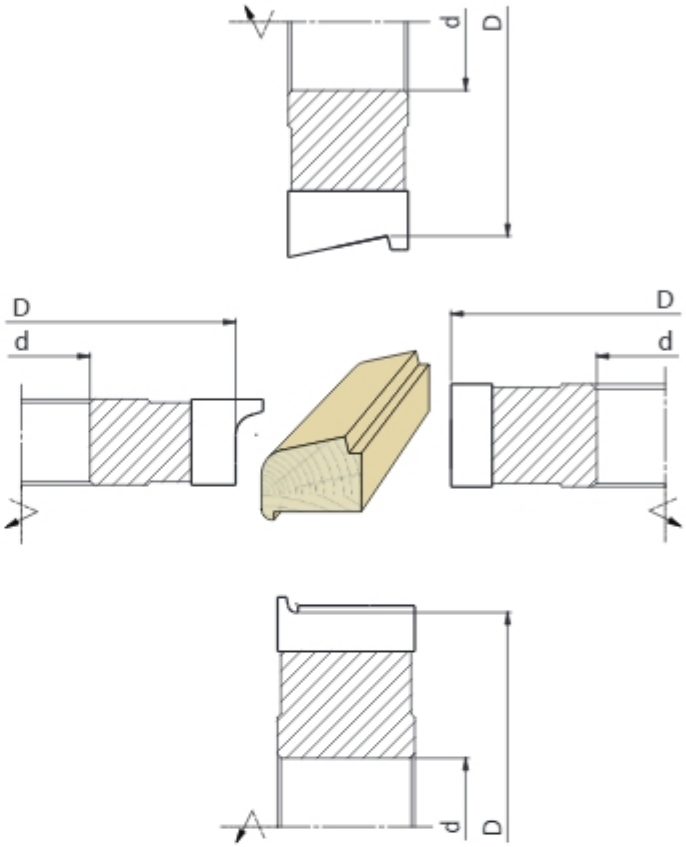

ZFO-02

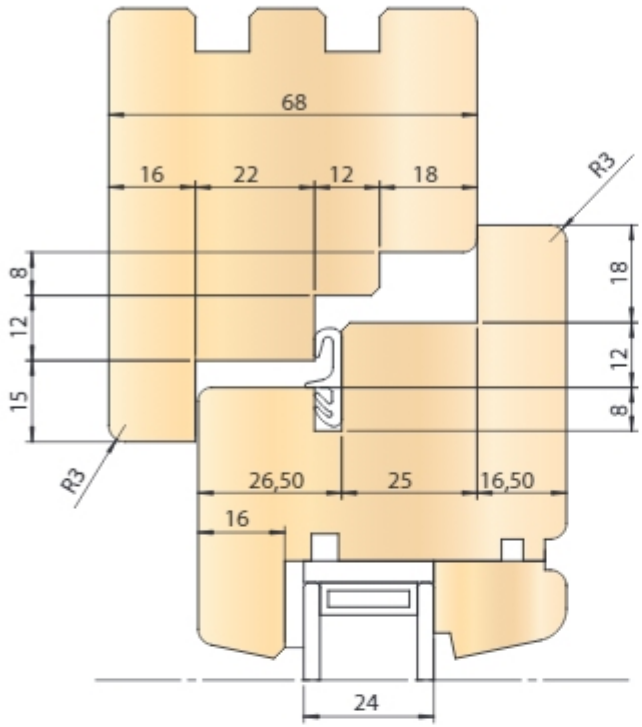

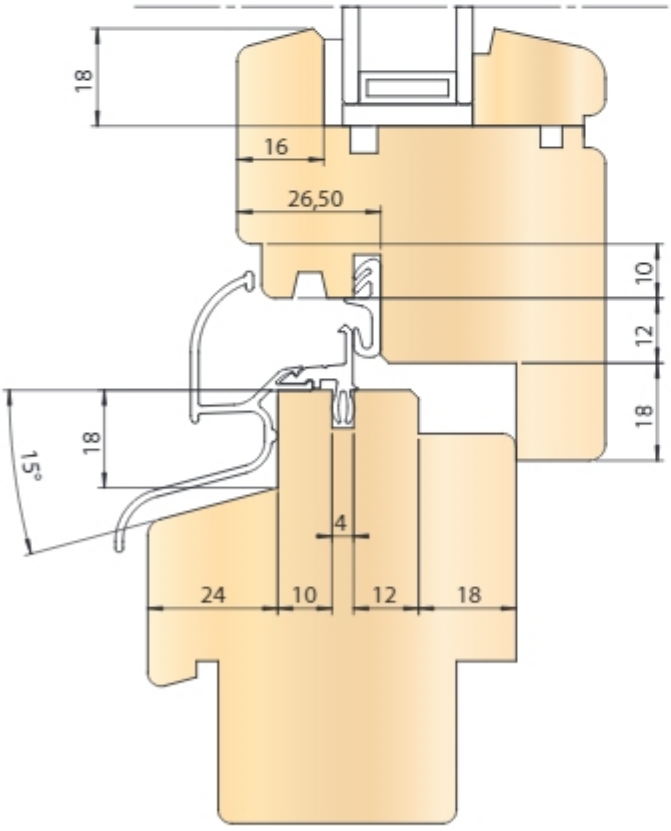

Set of brazed cutters, type **ZFO-02**, with four cutting teeth, designed for production of double-glass, single-sash windows 68 mm wide. The set includes 13 sets mounted on 100 mm long sleeves, without possibility to increase window sash and frame width.

List of sets

Basic set:

1. Internal longitudinal window sash profile made with window batten profile.
2. External longitudinal window sash profile.
3. Internal longitudinal side and top window frame profile.
4. Internal longitudinal bottom window frame profile.
5. Window batten cut-off.
6. Window sash tenon.
7. Window sash mortise.
8. Window frame bottom tenon.
9. Window frame top tenon.
10. Window frame mortise.
11. Drip cap profiling.
12. Window sill groove profile.
13. Floating mullion profile.

Standard sets can be extended with additional optional sets, depending on needs.





ZFO-02.01.00-2

Internal longitudinal window sash profile made in one operation with window batten profile (on a sleeve).

	Catalogue number		D mm	B mm	d_{max} mm	z	
1.	ZFO-02.01.01-2		147	23		4	+
2.	ZFO-02.01.02-2		177	15		4	+
3.	ZFO-02.01.03-2		142,6	31,5		4	+
4.	ZFO-02.01.04-2		177	17,5		4	+
5.	Distance ring	1 pc.		3			+
6.	Distance ring	1 pc.		5			+
7.	Distance ring	1 pc.		6			+
8.	BOX sleeve				50		+

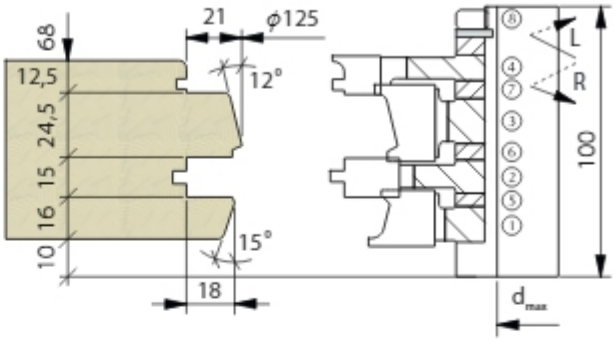

HSS HM

ZFO-02.02.00-2

External longitudinal window sash profile (on a sleeve).
The set consists of 3 HSS brazed cutters.

	Catalogue number		D mm	B mm	d_{max} mm	z	
1.	ZFO-02.02.01-2		201	31,5		4	+
2.	ZFO-02.02.02-2		167	28		4	+
3.	ZFO-02.02.03-2		135	24,5		4	+
4.	Distance ring	2 pcs.		9			+
5.	BOX sleeve				50		+

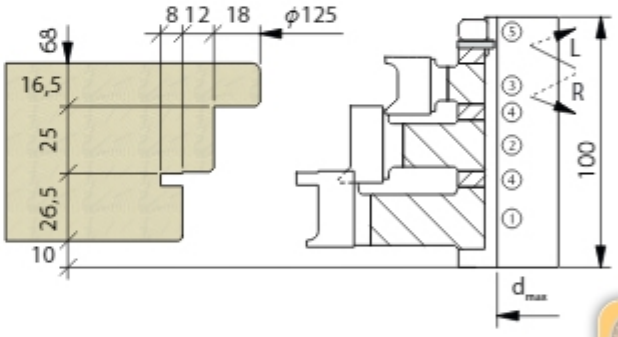

HSS

ZFO-02.02.00-2

External longitudinal window sash profile (on a sleeve).
The set consists of 3 HM brazed cutters.

	Catalogue number		D mm	B mm	d_{max} mm	z	
1.	ZFO-020201Aw01L		195	31,5		4	+
2.	ZFO-020202w01L		167	28		4	+
3.	ZFO-020203w01P		135	24,5		4	+
4.	ZFO-020204w01P		201	5		4	+
5.	Distance ring	1 pc.		3,5			+
6.	Distance ring	1 pc.		9,1			+
7.	BOX sleeve				50		+

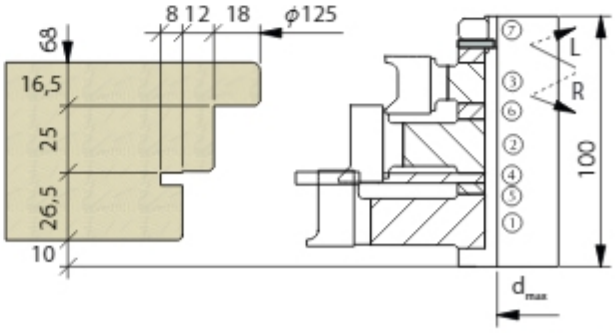

HM

ZFO-02.03.00-2

Internal longitudinal side and top window frame profile (on a sleeve).

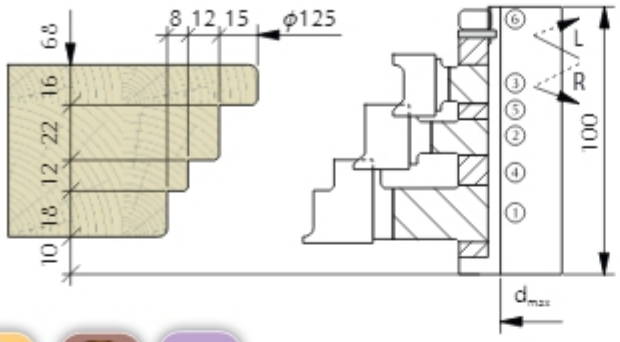

Catalogue number		D mm	B mm	d_{max} mm	z	
1. ZFO-02.03.01-2		205	35		4	+
2. ZFO-02.03.02-2		161	25		4	+
3. ZFO-02.03.03-2		135	24		4	+
4. Distance ring	1 pc.		7			+
5. Distance ring	1 pc.		4			+
6. BOX sleeve				50		+

HSS HM

ZFO-02.04.00-2

Internal longitudinal bottom window frame profile (on a sleeve).

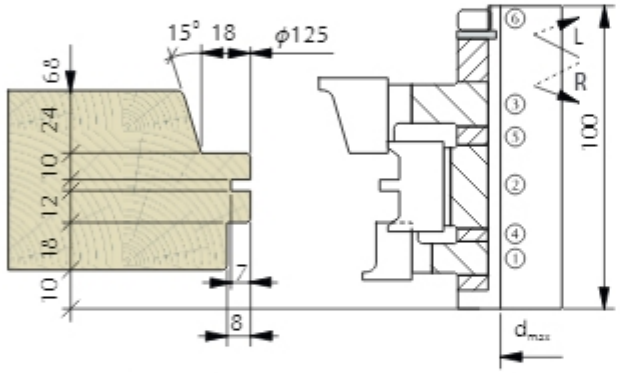

Catalogue number		D mm	B mm	d_{max} mm	z	
1. ZFO-02.04.01-2		151	23		4	+
2. ZFO-02.04.02-2		139	32		4	+
3. ZFO-02.04.03-2		183	29		4	+
4. Distance ring	1 pc.		4			+
5. Distance ring	1 pc.		6			+
6. BOX sleeve				50		+

HSS HM

ZFO-02.05.00-2

Window batten cut-off (on a sleeve).

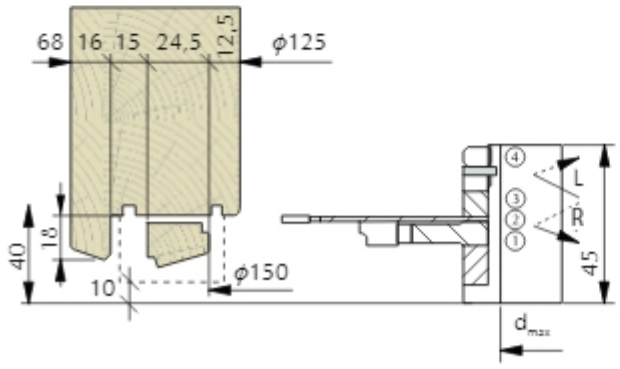

Catalogue number		D mm	B mm	d_{max} mm	z	
1. ZFO-02.05.01-2		156	11,7		4	+
2. PI-402 z=24		210	3		4	+
3. Distance ring	1 pc.		10			+
5. BOX sleeve				50		+

HM

Window sash tenon (on a sleeve).

ZFO-02.06.00-2

	Catalogue number		D mm	B mm	d_{max} mm	z	
1.	ZFO-02.06.01-2		250	10		4	+
2.	ZFO-02.06.02-2		214	10		4	+
3.	ZFO-02.06.03-3		224	22		4	+
4.	Distance ring	1 pc.		10			+
5.	Distance ring	1 pc.		17			+
6.	Distance ring	1 pc.		16			+
7.	BOX sleeve				50		+



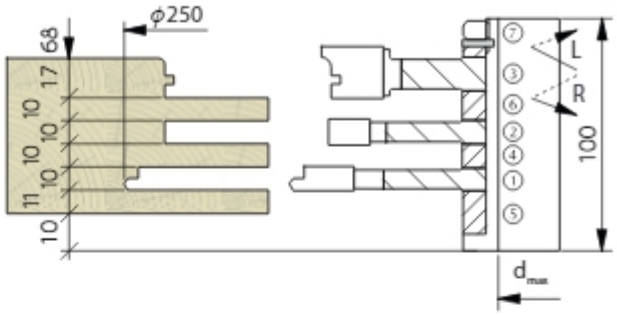



Window sash mortise (on a sleeve).

ZFO-02.07.00-2

	Catalogue number		D mm	B mm	d_{max} mm	z	
1.	ZFO-02.07.01-2		254,4	16		4	+
2.	ZFO-02.07.02-2		214	10		4	+
3.	ZFO-02.07.03-2		214	10		4	+
4.	Distance ring	1 pc.		14			+
5.	Distance ring	1 pc.		10			+
6.	Distance ring	1 pc.		22			+
7.	BOX sleeve				50		+



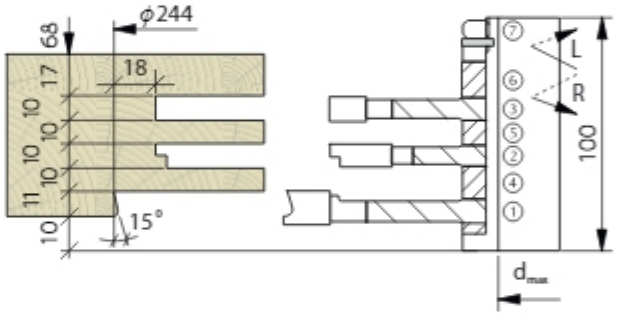



Window frame bottom tenon (on a sleeve).

ZFO-02.08.00-2

	Catalogue number		D mm	B mm	d_{max} mm	z	
1.	ZFO-02.08.01-2		244	23		4	+
2.	ZFO-02.08.02-2		250	10		4	+
3.	ZFO-02.08.03-2		212	21		4	+
4.	Distance ring	2 pcs.		17			+
5.	BOX sleeve				50		+



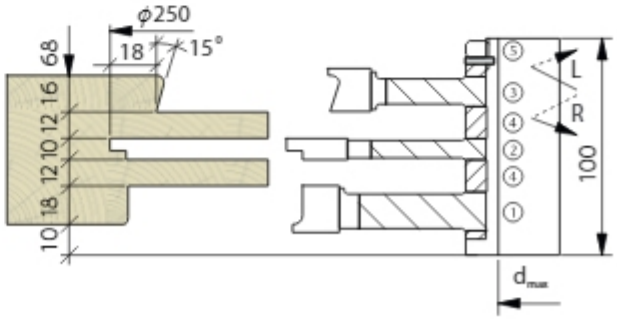



10

ZFO-02.09.00-2

Window frame top tenon (on a sleeve).

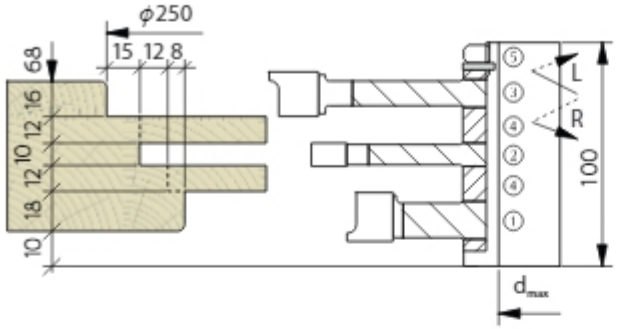

Catalogue number		D mm	B mm	d max mm	z	
1.	ZFO-02.09.01-2	190	23		4	+
2.	ZFO-02.09.02-2	220	10		4	+
3.	ZFO-02.09.03-2	260	21		4	+
4.	Distance ring 2 pcs.		17			+
5.	BOX sleeve			50		+

HSS HM

ZFO-02.10.00-2

Window frame mortise (on a sleeve).

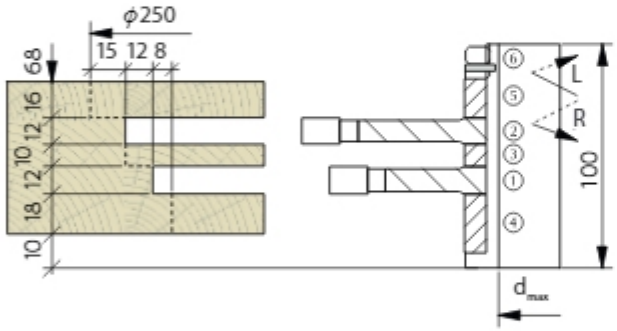

Catalogue number		D mm	B mm	d max mm	z	
1.	ZFO-02.10.01-2	196	12		4	+
2.	ZFO-02.10.02-2	220	12		4	+
3.	Distance ring 1 pc.		10			+
4.	Distance ring 1 pc.		23			+
5.	Distance ring 1 pc.		21			+
6.	BOX sleeve			50		+

HSS HM

ZFO-02.11.00-2

Drip cap profile.

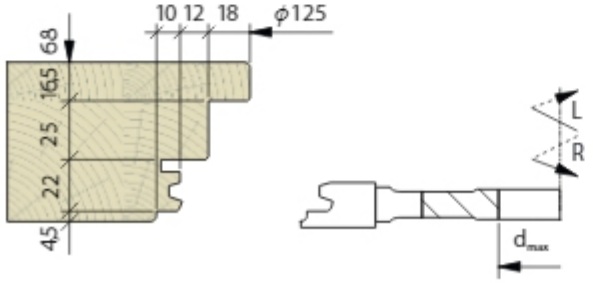

Catalogue number	D mm	B mm	d max mm	z	
1.	ZFO-02.11.01-2	215	22,5	50	4	+

HSS HM

ZFO-02.12.00-2

Window sill groove profile.

	Catalogue number	D mm	B mm	d_{max} mm	z	
1.	ZFO-02.12.01-2	185	16,3/12,3	50	4	+

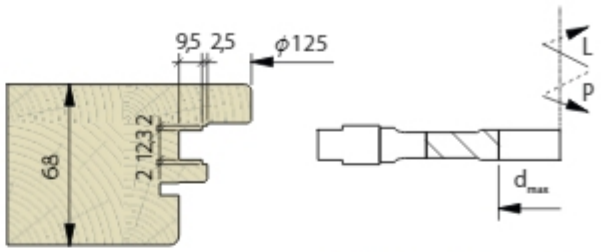





ZFO-02.13.00-2

Internal longitudinal profile of floating mullion (on a sleeve). The set consists of 3 HSS brazed cutters.

	Catalogue number		D mm	B mm	d_{max} mm	z	
1.	ZFO-02.00.13-2		135	29		4	+
2.	ZFO-02.00.13-2		180	33,5		4	+
3.	ZFO-02.00.13-2		195	21,5		4	+
4.	Distance ring	1 pc.		6,4			+
5.	Distance ring	1 pc.		9,1			+
6.	BOX sleeve				50		+

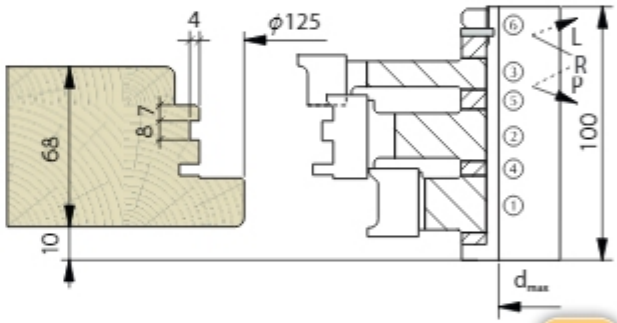





ZFO-02.13.00-2

Internal longitudinal profile of floating mullion (on a sleeve). The set consists of 3 HM brazed cutters.

	Catalogue number		D mm	B mm	d_{max} mm	z	
1.	ZFO-021301w01L		135	29		4	+
2.	ZFO-021302w01P		172	33,5		4	+
3.	ZFO-021303w01P		195	21,5		4	
4.	ZFO-021304w01L		180	5		4	+
5.	Distance ring	1 pc.		3,5			+
6.	Distance ring	1 pc.		9,1			
7.	BOX sleeve				50		+

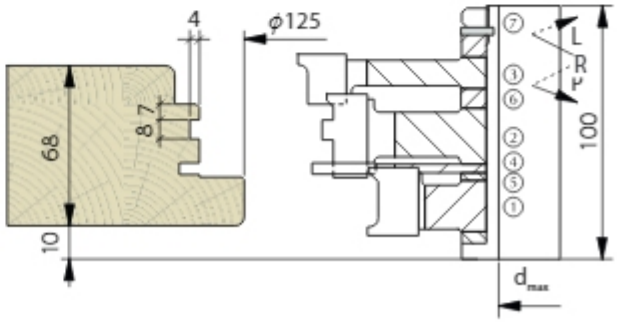





10

GO-01

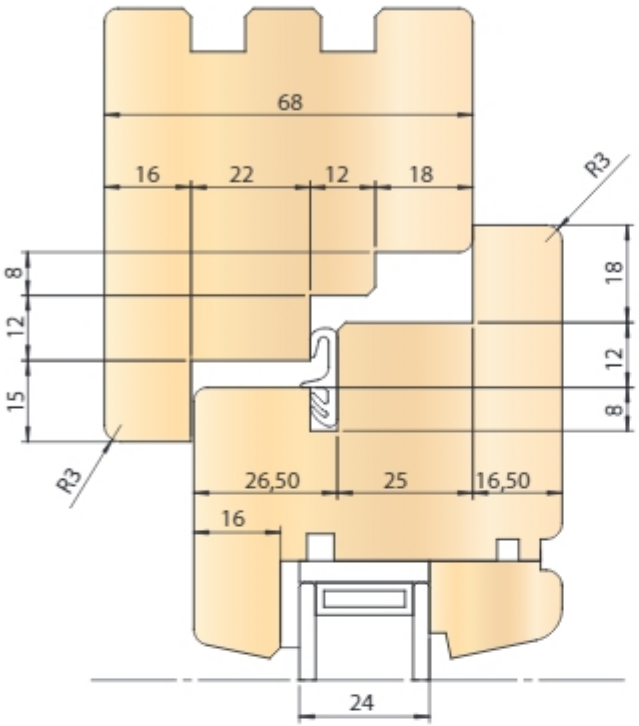

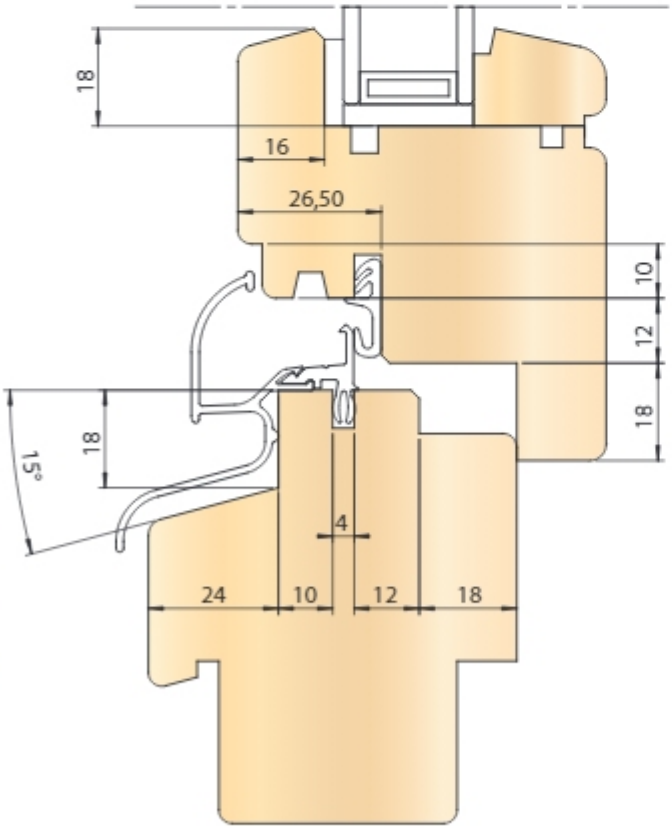

Sets of cutter heads, type **GO-01**, with three cutting teeth for tenoning and two cutting teeth for profiling, designed for professional machining of solid wood. The sets are used for double-glass, single-sash windows 68 mm wide. The set includes 11 basic sets and 5 optional ones, mounted on 100 mm long sleeves.

Type of work: tenoning, internal and external window profiling.

Material: solid hardwood

List of sets

Basic sets (page 10.14):

1. Window frame mortise.
2. Window frame bottom tenon.
3. Window frame top tenon.
4. Window sash tenon.
5. Window sash mortise.
6. Internal longitudinal bottom window frame profile.
7. Internal longitudinal side and top window frame profile.
8. Internal longitudinal window sash profile.
9. External longitudinal window sash profile.
10. Drip cap profiling.
11. Window sill groove profiling.

Optional sets (page 10.15):

12. External longitudinal bottom window frame profile.
13. External longitudinal side and top window frame profile.
14. External longitudinal window sash profile with additional gasket.
15. Floating mullion profile.
16. Window batten profile.

Standard sets can be extended with additional optional sets, depending on needs.





ZFO-02/GO-01 Softline

Sets of brazed cutters, type **ZFO-02 Softline**, with four cutting teeth and sets of cutter heads, type **GO-01 Softline**, with three cutting teeth for tenoning and two cutting teeth for profiling, designed for professional machining of solid wood. The sets are used for double-glass, single-sash windows 68 mm wide. The set includes 11 basic sets and 5 optional ones, mounted on 100 mm long sleeves.

Type of work: tenoning, internal and external window profiling.

Material: solid wood

List of sets

Basic sets (page 10.14):

1. Window frame mortise.
2. Window frame bottom tenon.
3. Window frame top tenon.
4. Window sash tenon.
5. Window sash mortise.
6. Internal longitudinal bottom window frame profile.
7. Internal longitudinal side and top window frame profile.
8. Internal longitudinal window sash profile.
9. External longitudinal window sash profile.
10. Drip cap profiling.
11. Window sill groove profiling.

Optional sets (page 10.15):

12. External longitudinal bottom window frame profile.
13. External longitudinal side and top window frame profile.
14. External longitudinal window sash profile with additional gasket.
15. Floating mullion profile.
16. Window batten profile.

Standard sets can be extended with additional optional sets, depending on needs.

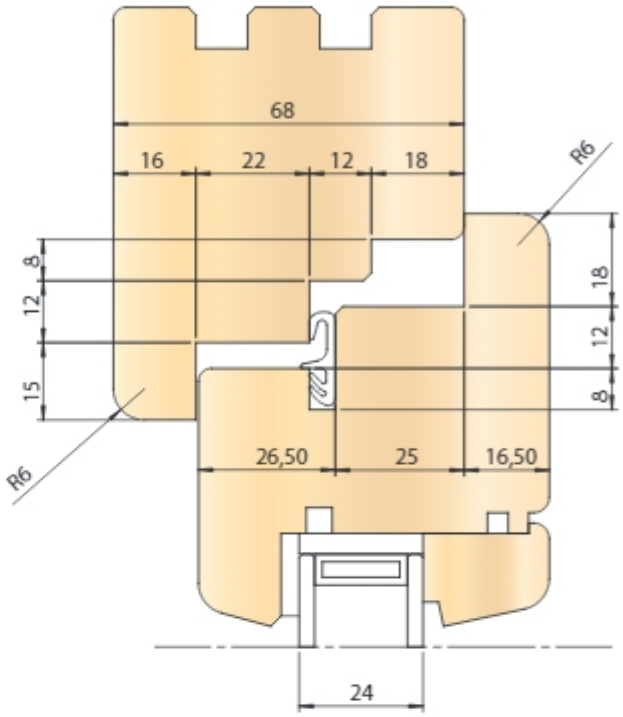

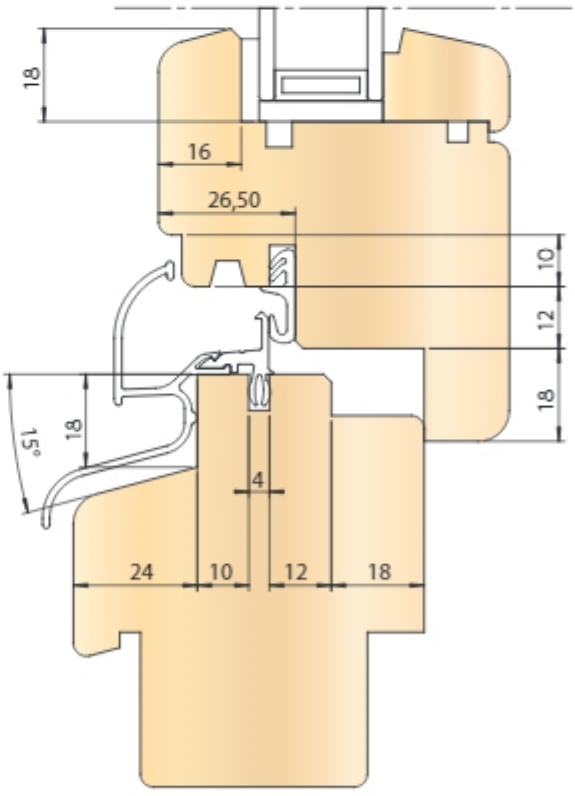





10

Basic set

Basic set for production of double-glass, single-sash windows 68 mm wide for cutter heads GO-01 or GO-01 Softline with number of cutting teeth given in the chart and for brazed cutters ZFO-02 Softline with four cutting teeth (z=4).

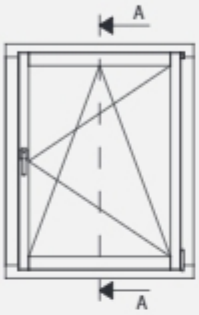

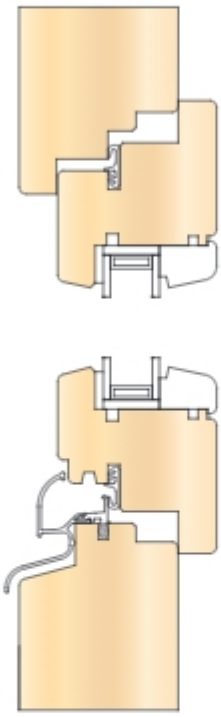

Profile number	Profile	Name	Tool	z
1.	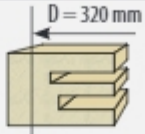	Window frame mortise	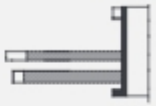	3
2.	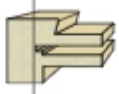	Window frame bottom tenon	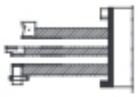	3
3.	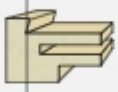	Window frame top tenon	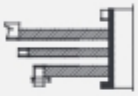	3
4.	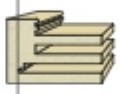	Window sash tenon	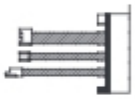	3
5.	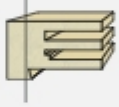	Window sash mortise	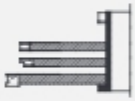	3
6.	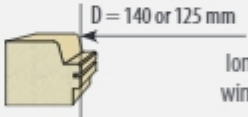	Internal longitudinal bottom window frame profile		2
7.		Internal longitudinal side and top window frame profile	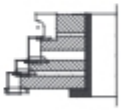	2
8.		Internal longitudinal window sash profile	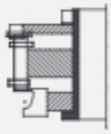	2
9.		External longitudinal window sash profile		2
10.		Drip cap profiling		2
11.		Window sill groove profiling		2

Optionally, it is possible to make window sill groove and drip cap in one operation with external longitudinal window sash profile, as window type GOD or GON.

Additional sets

Additional sets for cutter heads GO-01 or GO-01 Softline with number of cutting teeth given in the chart and for brazed cutters ZFO-02 Softline with four cutting teeth (z=4).

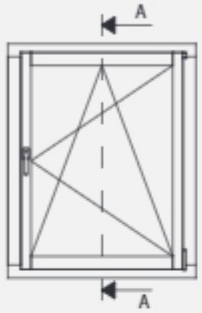

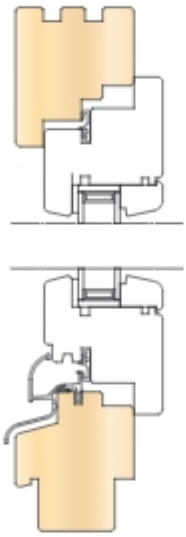

Profile number	Profile	Name	Tool	z
12.	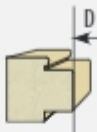	External longitudinal bottom window frame profile	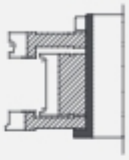	2
13.		External longitudinal side and top window frame profile		2
14.		External longitudinal window sash profile with additional gasket	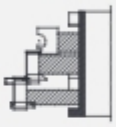	2

Floating mullion

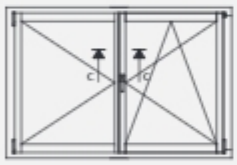

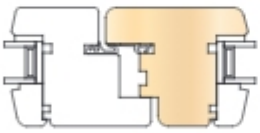

Profile number	Profile	Name	Tool	z
15.		Floating mullion profile		2

Window batten

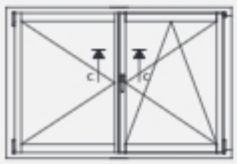

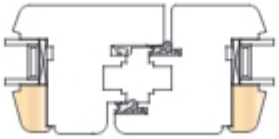

Profile number	Profile	Name	Tool	z
16.		Window batten profile	Types of profiling on page 10.4	

GOD

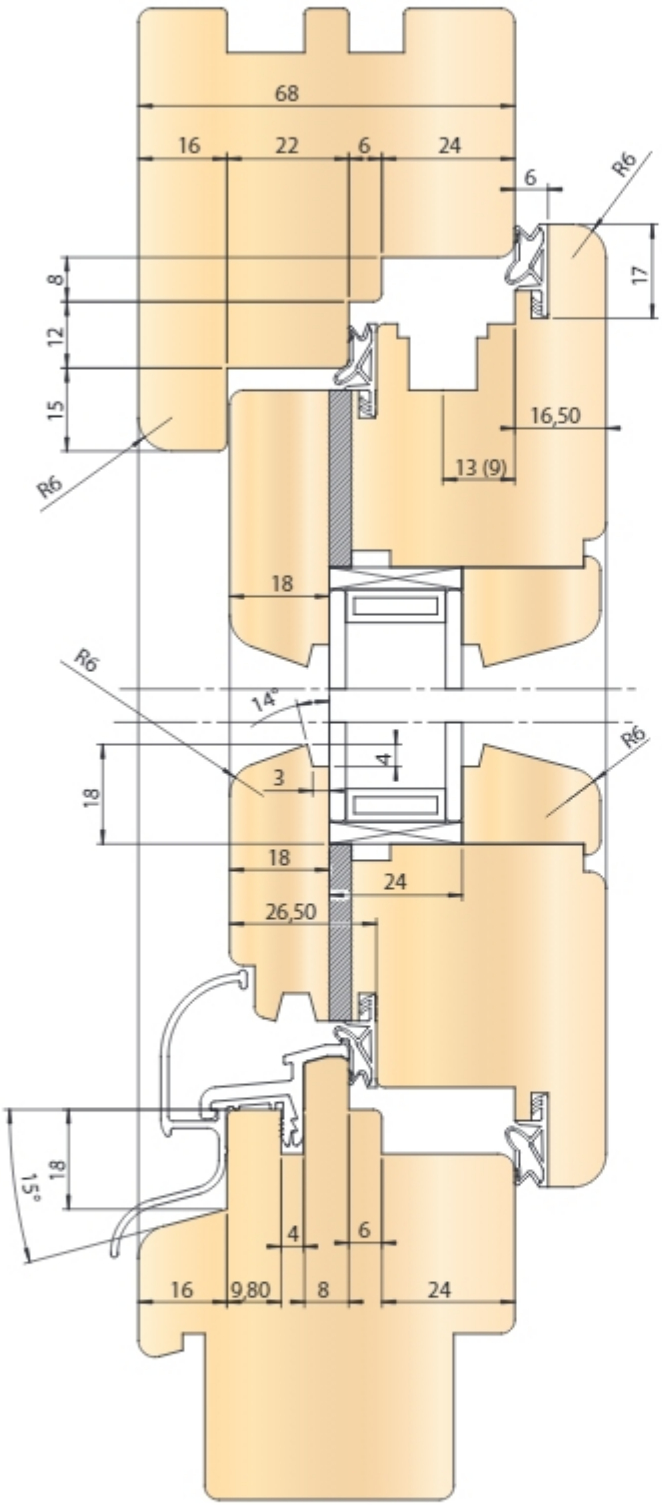

Sets of cutter heads, type **GOD**, with three cutting teeth for tenoning and two cutting teeth for profiling, designed for professional machining of solid wood soft and hard. The basic set GOD 68 2U is used for production of windows 68 mm wide with two gaskets, including one optionally on internal window sash edge. The set GOD 68 2U can be easily and at little cost extended to width 78 mm (GOD 78 2U), 88 mm (GOD 88 2U) and 92 mm (GOD 98 2U). The abovementioned sets can be additionally extended to width 88 mm (GOD 88 3U), 92 mm (GOD 92 3U) and 98 mm (GOD 98 3U) with three gaskets including one optionally on internal window sash edge.

Sets of cutter heads or single cutter heads are mounted on sleeves of small height enabling for adjustment of the set together with the produced window width. The window profile corresponds with pressed aluminum drip cap. Window sill groove and drip cap profile are made in one operation together with external longitudinal window sash profile or optionally in separate operations. The set includes 9 basic sets and additionally 11 optional ones.

List of sets

Basic sets (page 10.17):

1. Window frame mortise.
2. Window frame bottom tenon.
3. Window frame top tenon.
4. Window sash tenon.
5. Window sash mortise.
6. Internal longitudinal bottom window frame profile.
7. Internal longitudinal side and top window frame profile.
8. Internal longitudinal window sash profile.
9. External longitudinal window sash profile.

Additional sets (page 10.18):

10. External bottom window frame profile.
11. External side and top window frame profile.
12. Floating mullion profile.
13. Fixed mullion longitudinal profile.
14. Top frame counterprofile.
15. Bottom frame counterprofile.
16. Window batten profile.
17. Internal tenoning sash counterprofile.
18. Muntin profile.
19. Internal tenoning sash counterprofile.
20. Internal profiling sash counterprofile.


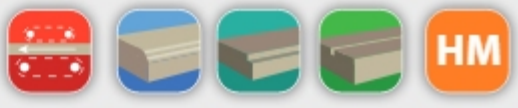

GOD basic set

Basic set of cutter head sets with given base diameter for universal GOD system for production of window 68 mm wide (GOD 68 2U).
With little additional cost and time, we easily expand the set to 78/88/92 (2U system) and 88/92/98 (3U system)

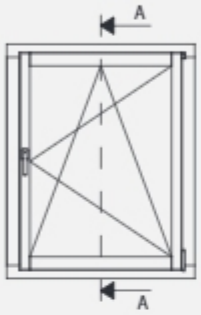

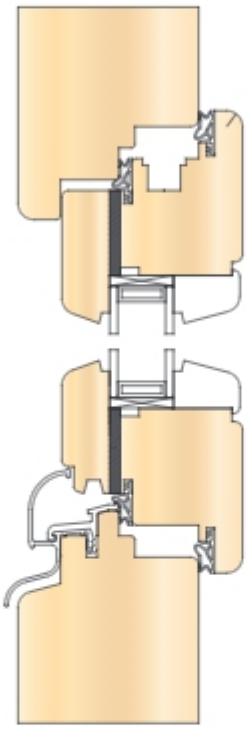

Profile number	Profile	Name	Tool	z
1.	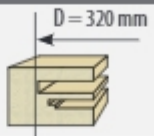	Window frame mortise		3
2.	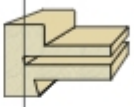	Window frame bottom tenon	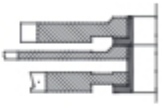	3
3.	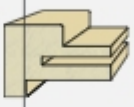	Window frame top tenon	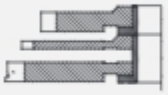	3
4.	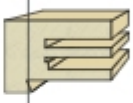	Window sash tenon	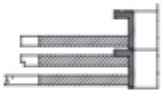	3
5.		Window sash mortise	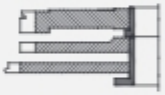	3
6.	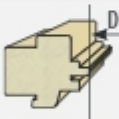	Internal longitudinal bottom window frame profile	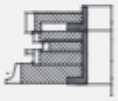	2
7.		Internal longitudinal side and top window frame profile	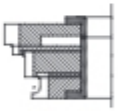	2
8.		Internal longitudinal window sash profile	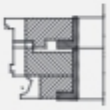	2
9.	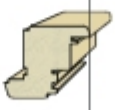	External longitudinal window sash profile with drip cap and window sill groove	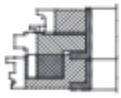	2
9a-1.		External longitudinal window sash profile*	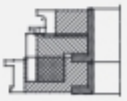	2
9a-2.		Drip cap profiling*		2
9a-3.	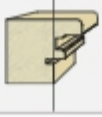	Window sill groove profiling*	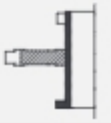	2

* Profiles made optionally in separate operations.

GOD additional sets

Additional sets with given base diameter for universal GOD system for production of supplemental profiles. Extending the widow width to 78/88/92 (system 2U) and 88/92/98 (system 3U) requires retooling or buying additional tools.

Window frame profiles

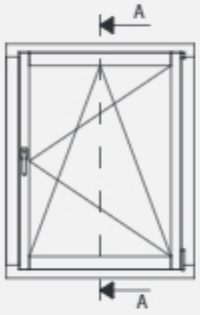

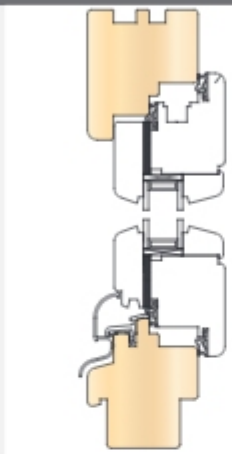

Profile number	Profile	Name	Tool	z
10.	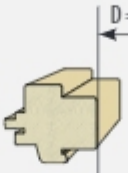	External bottom window frame profile	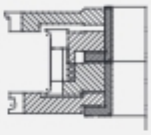	2
11.	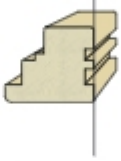	External top and side window frame profile	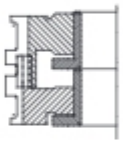	2

Floating mullion

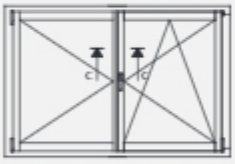

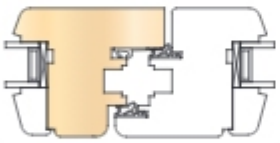

Profile number	Profile	Name	Tool	z
12.	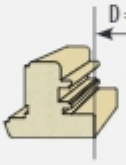	Internal longitudinal profile of floating mullion	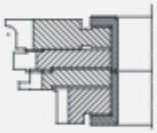	2

Fixed mullion

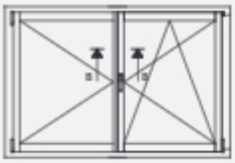

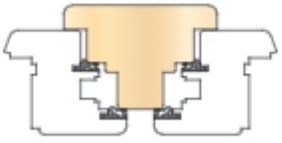

Profile number	Profile	Name	Tool	z
13.	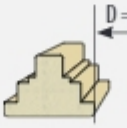	Fixed mullion longitudinal profile	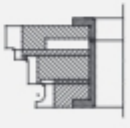	2
14.	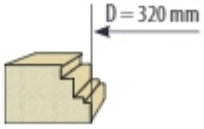	Top frame counterprofile	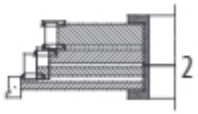	2
15.	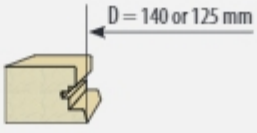	Bottom frame counterprofile	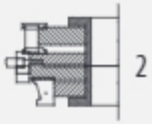	2

GOD additional sets

Additional sets with given base diameter for universal GOD system for production of supplemental profiles. Extending the widow width to 78/88/92 (system 2U) and 88/92/98 (system 3U) requires retooling or buying additional tools.

Window batten

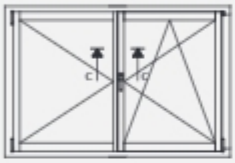

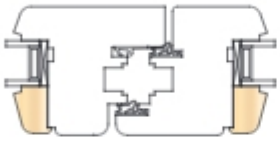

Profile number	Profile	Name	Tool	z
16.		Window batten profile	Types of profiling on page 10.4	

Muntin

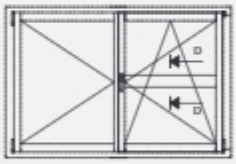

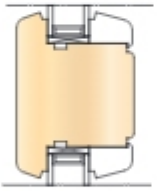



Profile number	Profile	Name	Tool	z
17.	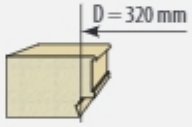	Internal tenoning sash counterprofile	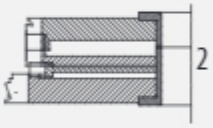	2
18a.		Internal longitudinal counterprofile of structural muntin	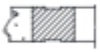	4
18b.		Internal longitudinal profile of structural muntin		4

Balcony

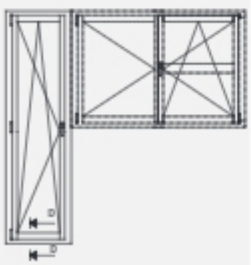

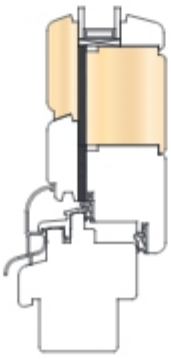

Profile number	Profil	Nazwa	Tool	z
19.	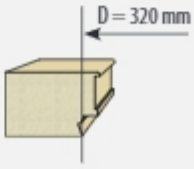	Internal tenoning sash counterprofile	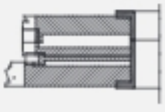	2
20.	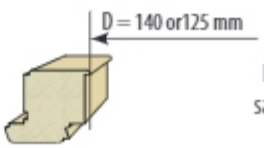	Internal profiling sash counterprofile	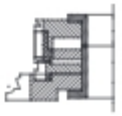	2

GOD system 2U

Universal system **GOD 2U** for production of windows 68/78/88/92 with two gaskets, including one optionally on internal window sash edge. The system is designed to enable production of windows of various width: 68 mm, 78 mm , 88 mm and 92 mm. This can be done easily and at little cost, by extending sets of cutter heads mounted on sleeves allowing for profiles width adjustment. In 2U system profiles double gasketing has been used which significantly increases widows' tightness.

GOD 2U – Universal system for production of window 68/78/88/92 extendable to various width easily and at little cost.

GOD 92 2U width 92 mm

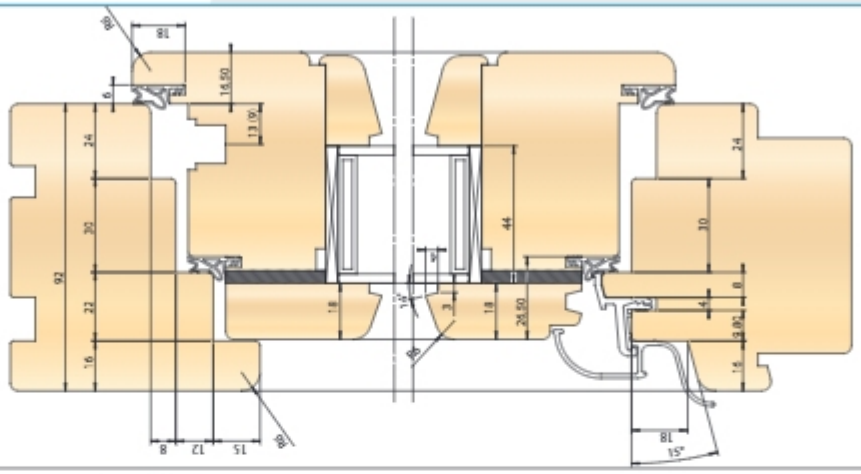

GOD 88 2U width 88 mm

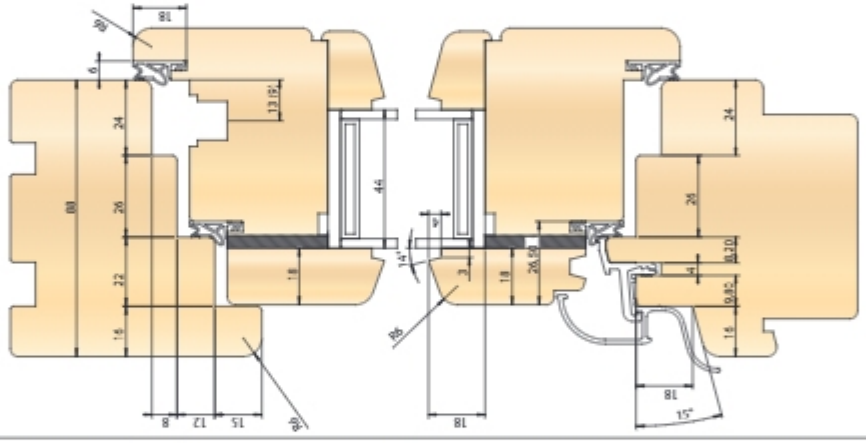

GOD 78 2U width 78 mm

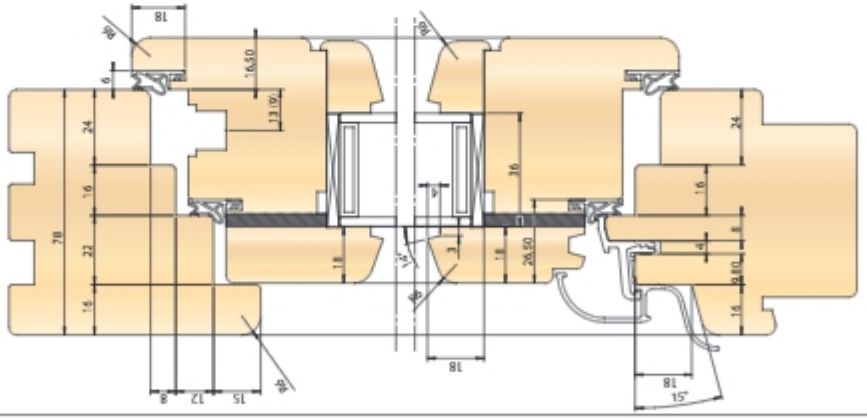

GOD 68 2U width 68 mm

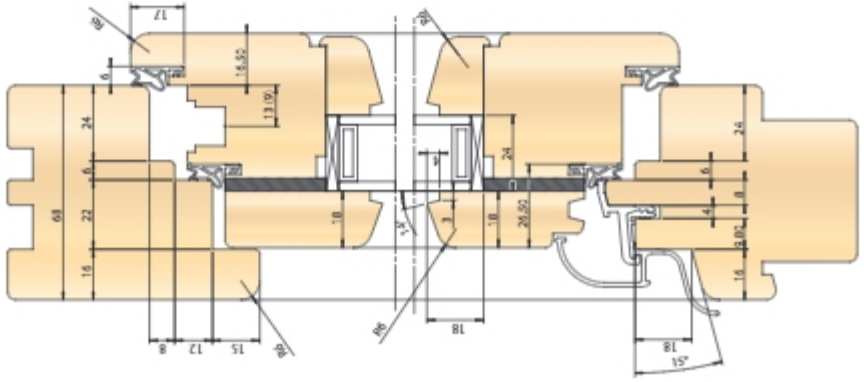

GOD system 3U

Universal **GOD 3U** for production of windows 88/92/98 with three gaskets, including one optionally on internal window sash edge. The system is designed to enable production of windows of various width: 88 mm, 92 mm and 98 mm. This can be done easily and at little cost, by extending sets of cutter heads mounted on sleeves allowing for profiles width adjustment. In 3U system profiles triple gasketing has been used which significantly increases widows' tightness. 3U system can be used for windows 88 mm and wider.

GOD 3U – Universal system for production of window 88/92/98
extendable to various width easily and at little cost.

GOD 98 3U width 98 mm

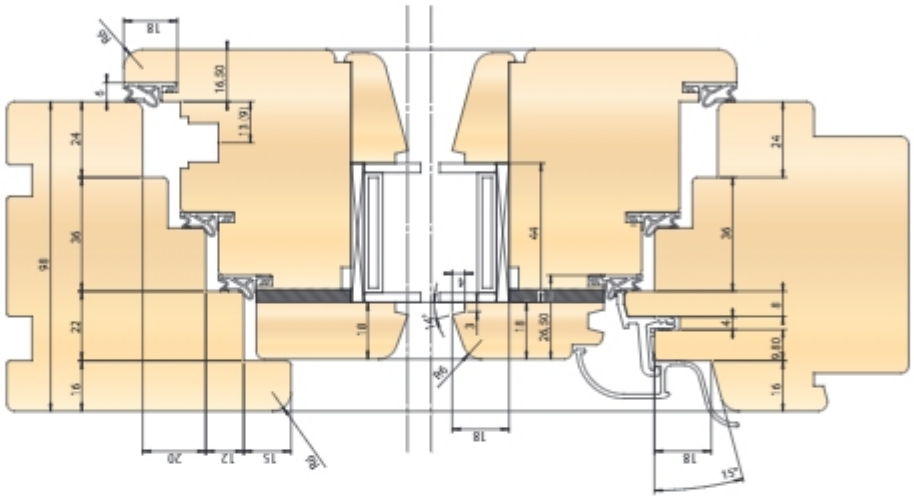

GOD 92 3U width 92 mm

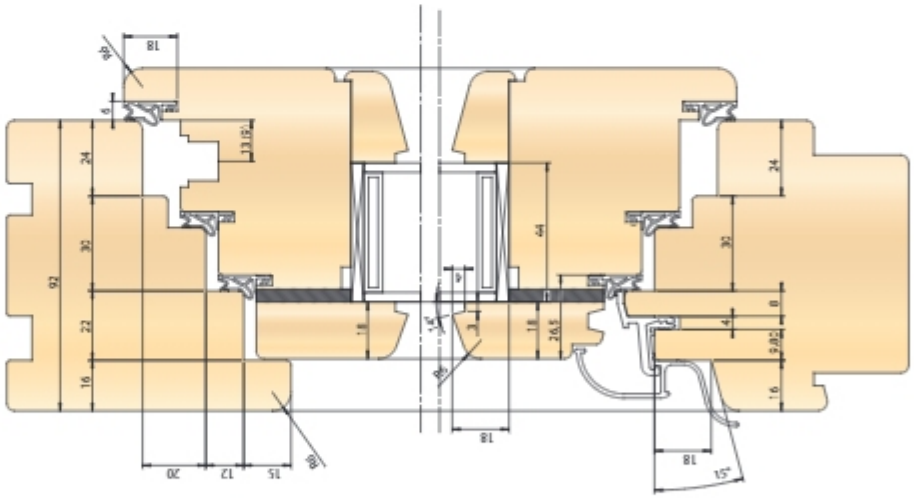

GOD 88 3U width 88 mm

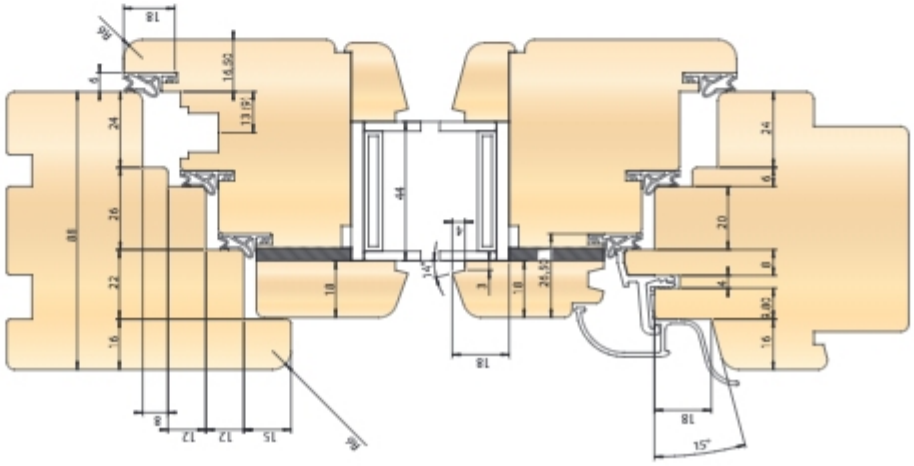

GON

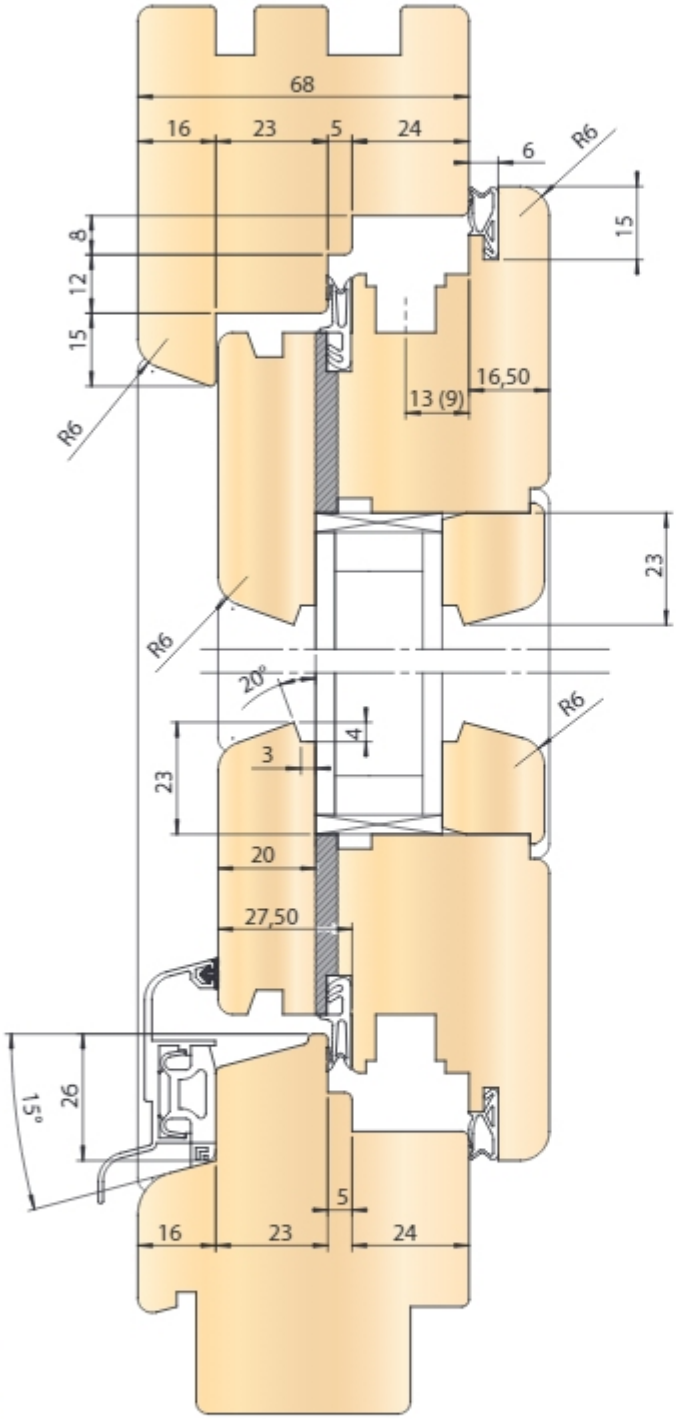

Sets of cutter heads, type **GON**, with three cutting teeth for tenoning and two cutting teeth for profiling, designed for professional machining of solid wood soft and hard. The basic set GOD 68 2U is used for production of windows 68 mm wide with two gaskets, including one optionally on internal window sash edge. The set GON 68 2U can be easily and at little cost extended to width 78 mm (GON 78 2U), 88 mm (GON 88 2U). There is possibility to extend the abovementioned sets to width 88 mm (GON 88 3U) and 98 mm (GON 98 3U) with three gaskets including one optionally on internal window sash edge.

Sets of cutter heads or single cutter heads are mounted on sleeves of small height enabling for adjustment of the set with the produced window width. The window profile corresponds with bolt-on aluminum drip cap. Window sill groove and drip cap profile are made in one operation together with external longitudinal window sash profile or optionally in separate operations. The set includes 9 basic sets and additionally 11 optional ones.

List of sets

Basic sets (page 10.23):

1. Window frame mortise.
2. Window frame bottom tenon.
3. Window frame top tenon.
4. Window sash tenon.
5. Window sash mortise.
6. Internal longitudinal bottom window frame profile.
7. Internal longitudinal side and top window frame profile.
8. Internal longitudinal window sash profile.
9. External longitudinal window sash profile.

Additional sets (page 10.24):

10. External bottom window frame profile.
11. External side and top window frame profile.
12. Floating mullion profile.
13. Fixed mullion longitudinal profile.
14. Top frame counterprofile.
15. Bottom frame counterprofile.
16. Window batten profile.
17. Internal tenoning sash counterprofile.
18. Muntin profile.
19. Internal tenoning sash counterprofile.
20. Internal profiling sash counterprofile.





GON basic set

Basic set of cutter head sets with given base diameter for universal **GON** system for production of window 68 mm wide (GON 68 2U).
With little additional cost and time, we easily expand the set to 78/88 (2U system) and 88/98 (3U system).

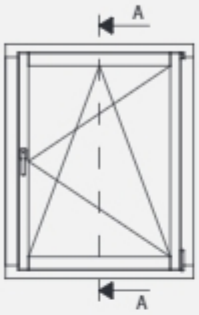

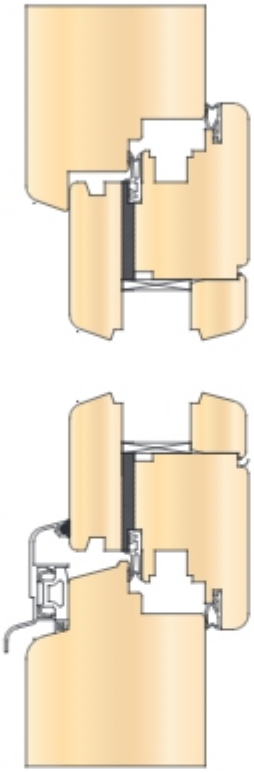

Profile number	Profile	Name	Tool	z
1.	D = 320 mm	Window frame mortise		3
2.		Window frame bottom tenon		3
3.		Window frame top tenon		3
4.		Window sash tenon		3
5.		Window sash mortise		3
6.	D = 140 or 125 mm	Internal longitudinal bottom window frame profile		2
7.		Internal longitudinal side and top window frame profile		2
8.		Internal longitudinal window sash profile		2
9.		External longitudinal window sash profile with drip cap and window sill groove		2
9a-1.		External longitudinal window sash profile*		2
9a-2.		Drip cap profiling*		2
9a-3.		Window sill groove profiling*		2

* Profiles made optionally in separate operations.

GON additional sets

Additional sets with given base diameter for universal **GON** system for production of supplemental profiles. Extending the widow width to 78/88 (system 2U) and 88/98 (system 3U) requires retooling or buying additional tools.

Window frame profiles

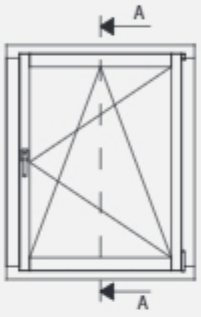

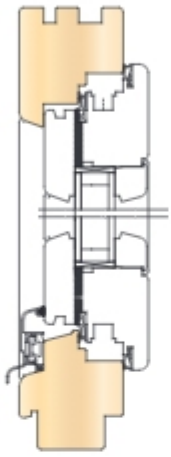

Profile number	Profil	Nazwa	Tool	z
10.	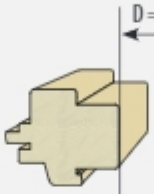	External bottom window frame profile	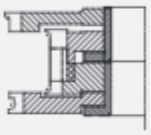	2
11.	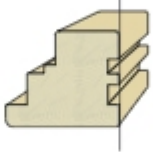	External top and side window frame profile	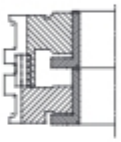	2

Floating mullion

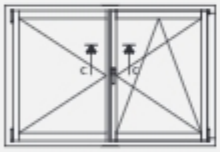

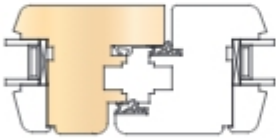

Profile number	Profile	Name	Tool	z
12.	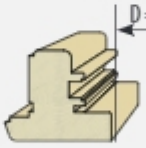	Internal longitudinal profile of floating mullion	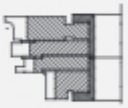	2

Fixed mullion

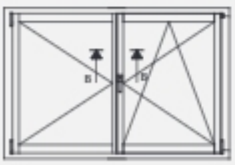

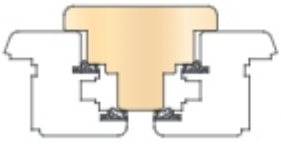

Profile number	Profile	Name	Tool	z
13.		Fixed mullion longitudinal profile	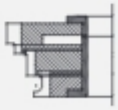	2
14.	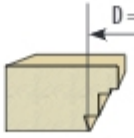	Top frame counterprofile	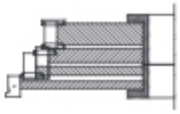	2
15.	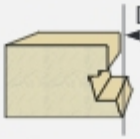	Bottom frame counterprofile	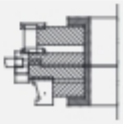	2

Each order is treated individually. Produce tools are adapted to client's needs, his technical requirements and machine park.

GON additional sets

Window batten

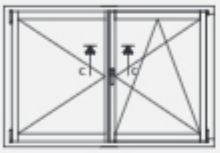
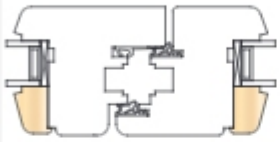

Profile number	Profile	Name	Tool	z
16.		Window batten profile	Types of profiling on page 10.4	

Muntin

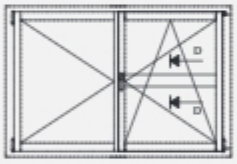
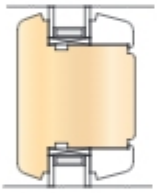


Profile number	Profile	Name	Tool	z
17.	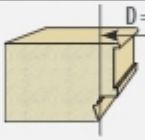	Internal tenoning sash counterprofile	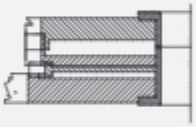	2
18a.		Internal longitudinal counterprofile of structural muntin		4
18b.		Internal longitudinal profile of structural muntin		4

Balcony

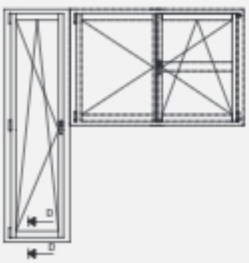
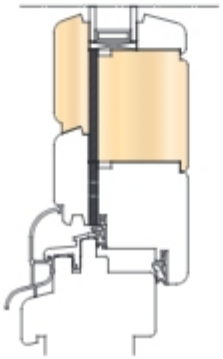

Profile number	Profile	Name	Tool	z
19.	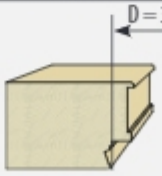	Internal tenoning sash counterprofile	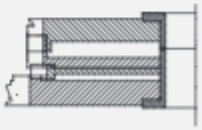	2
20.	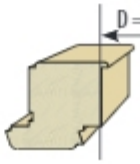	Internal profiling sash counterprofile	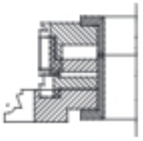	2

GON system 2U

Universal **GON 2U** for production of windows 68/78/88 with two gaskets, including one optionally on internal window sash edge. The system is designed to enable production of windows of various width: 68 mm, 78 mm and 88 mm. This can be done easily and at little cost, by extending sets of cutter heads mounted on sleeves allowing for profiles width adjustment. In 2U system profiles double gasketing has been used which significantly increases widows' tightness.

GON 2U – Universal system for production of window 68/78/88
extendable to various width easily and at little cost.

GON 88 2U width 88 mm

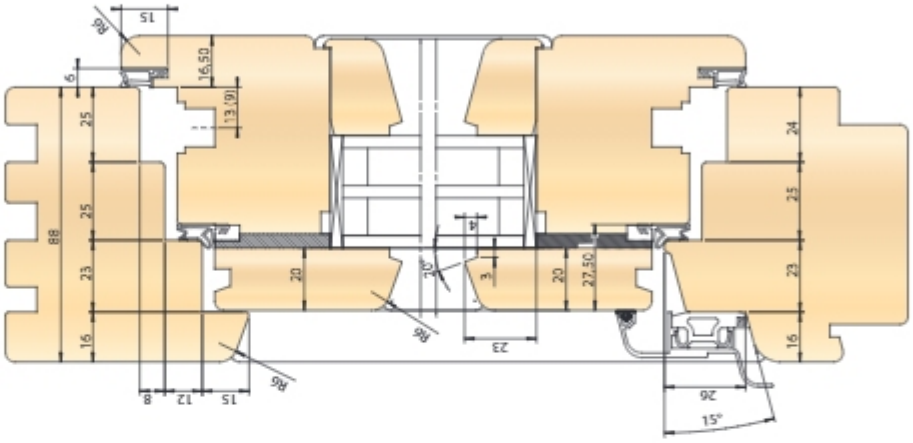

GON 78 2U width 78 mm

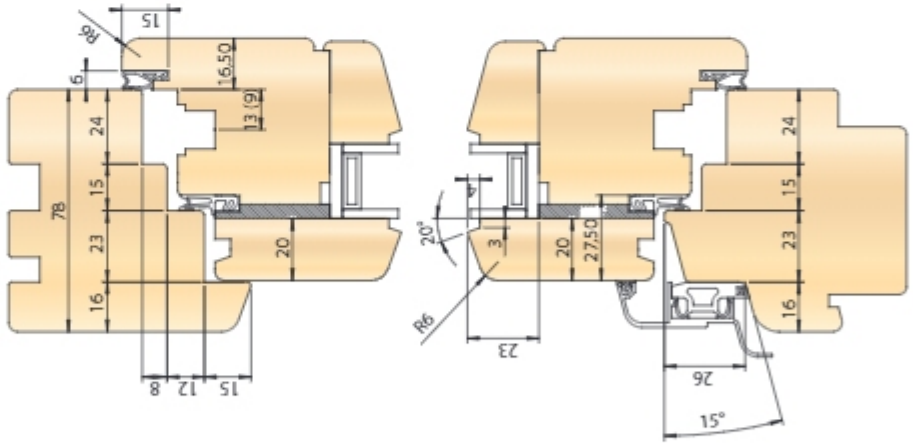

GON 68 2U width 68 mm

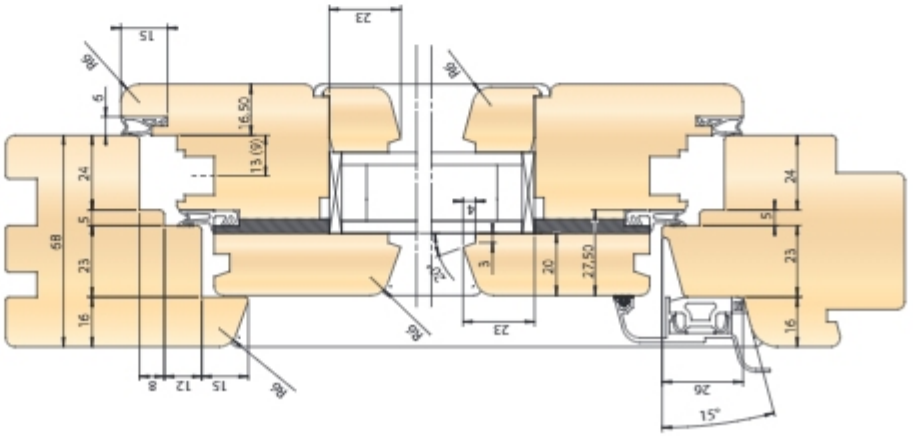

GON system 3U

Universal **GON 3U** for production of windows 88/98 with three gaskets, including one optionally on internal window sash edge. The system is designed to enable production of windows of various width: 88 mm and 98 mm. This can be done easily and at little cost, by extending sets of cutter heads mounted on sleeves allowing for profiles width adjustment. In 3U system profiles triple gasketing has been used which significantly increases widows' tightness. 3U system can be used for windows 88 mm and wider.

GON 3U – Universal system for production of window 88/98 extendable to various width easily and at little cost.

GON system 3U width 98 mm

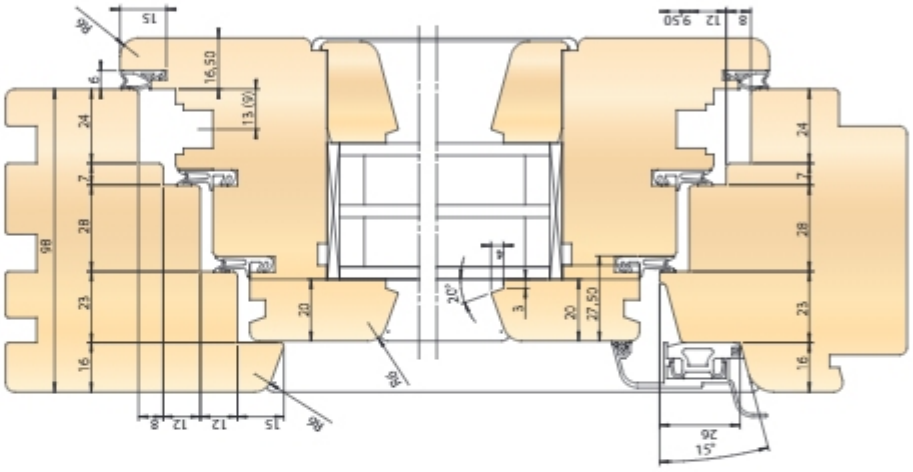

GON system 3U width 88 mm

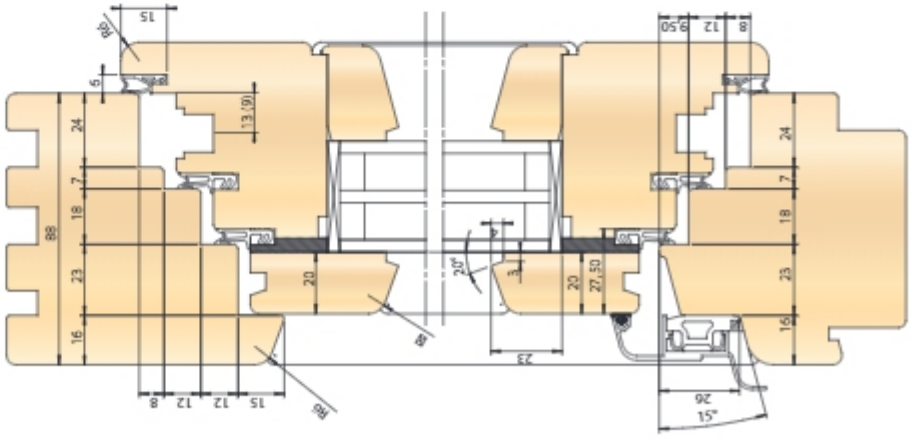

GO-16

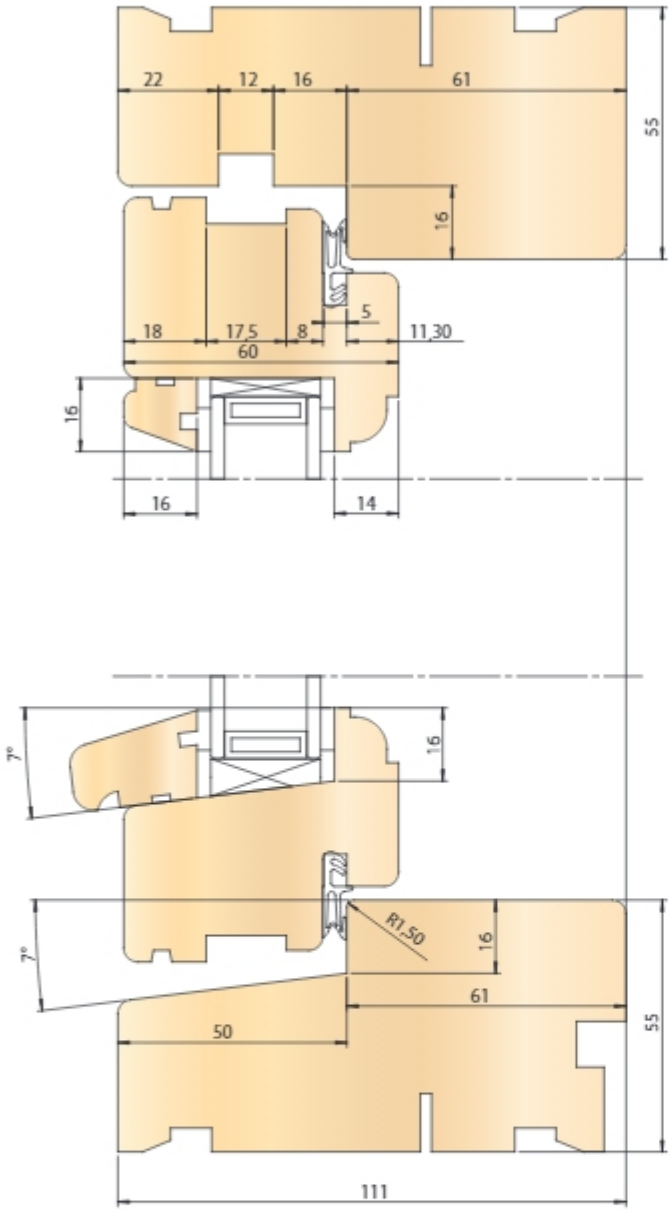

Sets of cutter heads, type **GO-16** with three cutting teeth for tenoning and two cutting teeth for profiling, designed for professional machining of solid wood. The sets are used for double-glass, single-sash windows 111 mm wide – SCANDINAVIAN type. The set includes 11 basic sets and 5 optional ones, mounted on sleeves L=140 mm for window frame and L=90 for window sash.

List of sets

Basic sets (page 10.29):

1. Window frame mortise.
2. Window frame bottom tenon.
3. Window frame top tenon.
4. Window sash top mortise.
5. Window sash bottome mortise.
6. Window sash tenon.
7. Internal longitudinal bottom window frame profile.
8. Internal longitudinal top window frame profile.
9. Bottom internal longitudinal window sash profile.
10. Top and side internal longitudinal window sash profile.
11. External longitudinal window sash profile.

Optional sets (page 10.30):

12. External longitudinal window frame profile.
13. Internal longitudinal side window frame profile.
14. Cutting for internal window sill.
15. Bottom window batten profile.
16. Top window batten profile.

Standard sets can be extended with additional optional sets, depending on needs.

Basic set for production of double-glass, single-sash windows 111 mm wide for cutter heads GO-16 with number of cutting teeth given in the chart.

GO-16 basic set

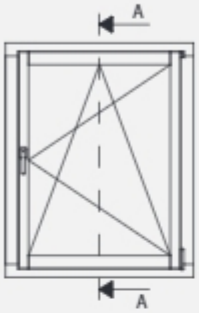

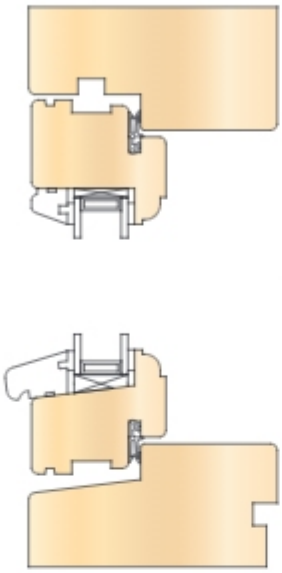

Profile number	Profile	Name	Tool	z
1.	D = 316 mm	Window frame mortise		3
2.		Window frame bottom tenon		3
3.		Window frame top tenon		3
4.		Window sash top mortise		3
5.		Window sash bottome mortise		3
6.		Window sash tenon		3
7.	D = 125 or 140 mm	Internal longitudinal bottom window frame profile		2
8		Internal longitudinal top window frame profile		2
9.		Bottom internal longitudinal window sash profile		2
10		Top and side internal longitudinal window sash profile		2
11		External longitudinal window sash profile		2

GO-16 additional sets

Additional sets for cutter heads GO-16 with number of cutting teeth given in the chart. Each order is treated individually. Produced tools are adapted to client's needs, his technical requirements and machine park.

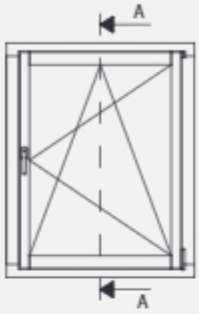

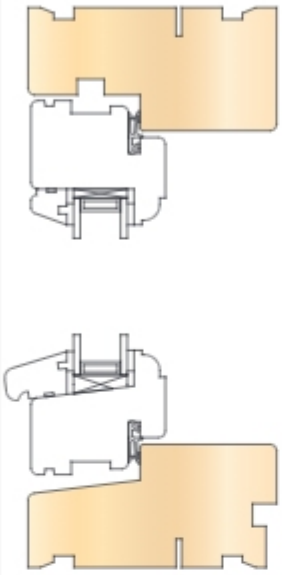

Profile number	Profile	Name	Tool	z
12.	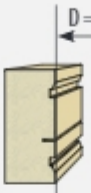	External longitudinal window frame profile		3
13.	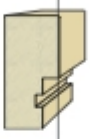	Internal longitudinal side window frame profile	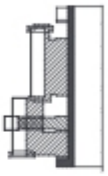	3
14.	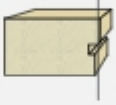	Cutting for internal window sill	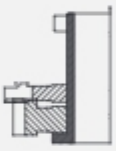	3

Window batten

Profile number	Profile	Name	Tool	z
15.		Bottom window batten profile		4
16.		Top window batten profile		4

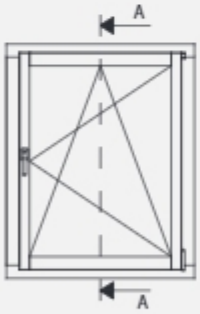

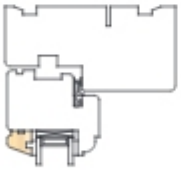

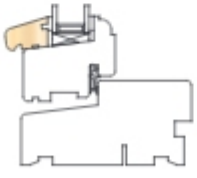

HSK sets

Sets of profile cutter heads with two cutting teeth, designed for professional machining of solid wood. The sets are used for making internal and external window frame and window sash profiles. The sets are mounted on HSK shanks and work on CNC machines.
Minimum base diameter is D_{min} = 100 mm (in special cases it is possible to use D_{min} = 80 mm). The sets are offered on client's individual request.

Orders should include:
- machine or work scheme,
- maximum set weight installed on the spindle,
- base diameters of tools for profiling,
- A – base – set position,
- type of machined material,
- other information relevant for designing and production process.

Type of work: window profiles making.

Material: solid wood, hard and soft.

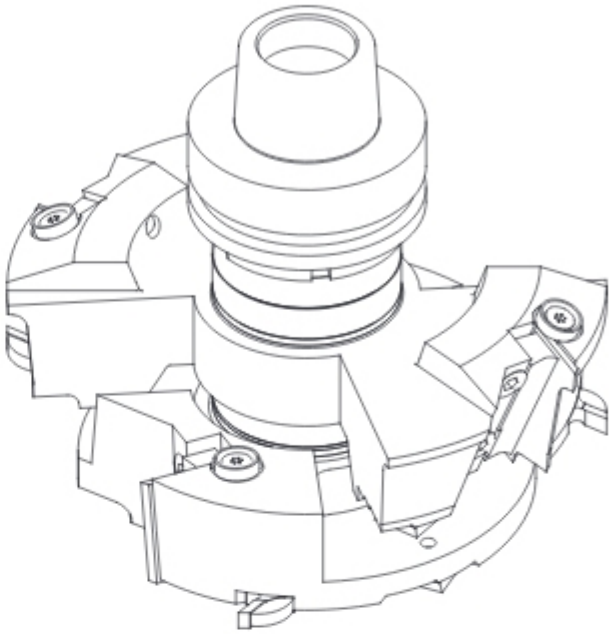

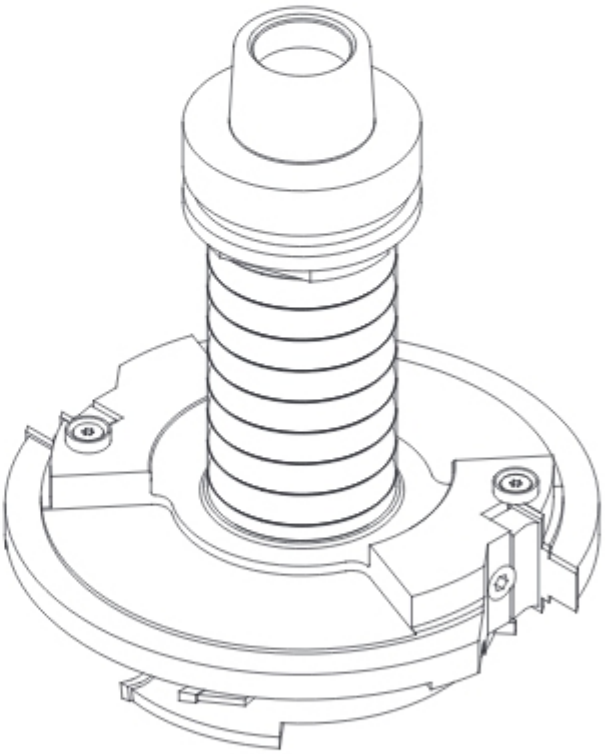

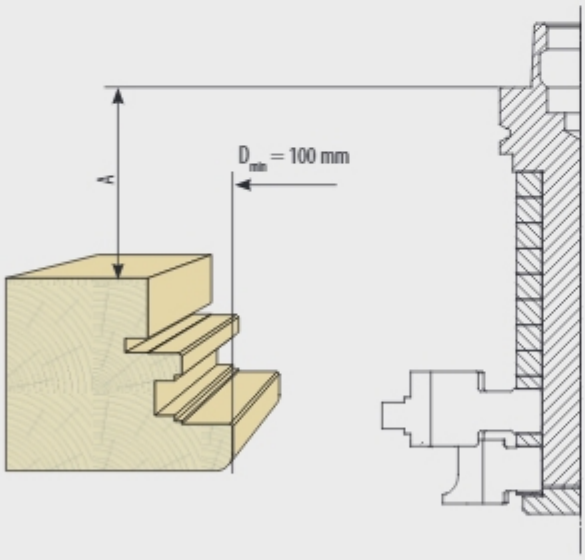





10

Drip caps GO-01/GOE

Aluminum pressed drip caps, type **GO**, installed in bottom window frame profile of ZFO-02, ZFO-02 Softline, GO-01, GO-01 Softline and **GOE** windows. Used with window frame with a cut in window sash.
Below are presented example drip cap types used with given window profile. When ordering set of cutters or cutter heads, please give drip cap type.

With cut in window sash

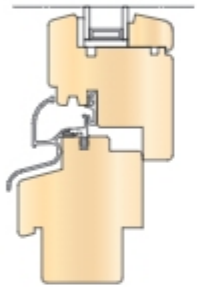



ALURON
ATW 22 / 30
ATW 22 / 34

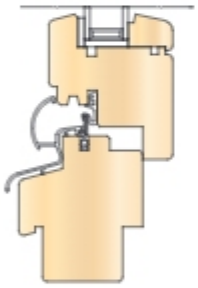

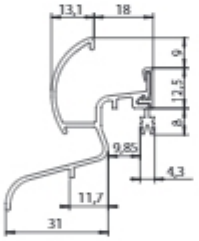

EFEKTOR
LPTOS 31 / 31 W

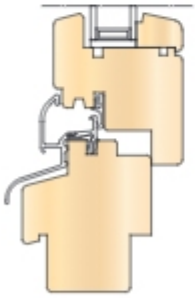

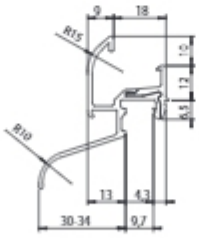

GUTMANN
Neckar 22 / 30 F- TXL
Neckar 22 / 34 F – TXL

Drip caps GOD

Aluminum pressed drip caps, type **GOD**, installed in bottom window frame profile of GOD windows. Used with window frame with a cut in window sash. Used with two types of window frames with and without a cut in window sash. Below are presented example drip cap types used with given window profile. When ordering set of cutters or cutter heads, please give drip cap type.

With cut in window sash

ALURON
ATW 22 / 21 / 18
ATW 22 / 24 / 18

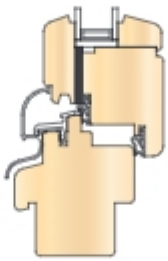

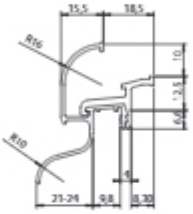

EFEKTOR
LPTOS 33 / 22 W

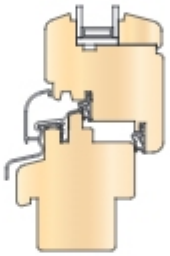



GUTMANN
Donau 22 / 24 F- TI

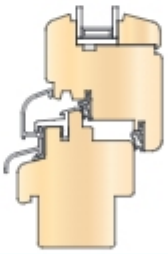

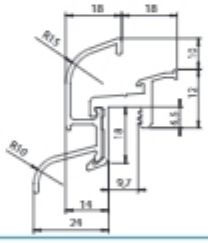

Without cut in window sash

ALURON
ATW 22 / 21 / 22
ATW 22 / 24 / 22

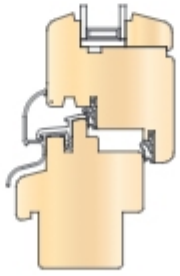

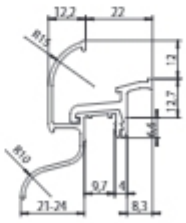

GUTMANN
Main 22 / 24 F-TI

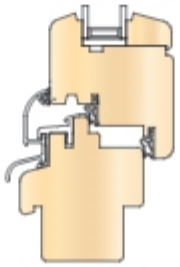

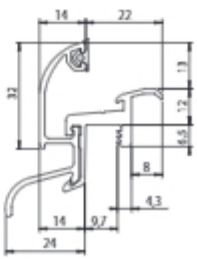

Drip caps GON

Aluminum bolt-on drip caps, type **GON**, installed in bottom window frame profile of GON windows. Used with window frame without a cut in window sash. Below are presented example drip cap types used with given window profile. When ordering set of cutters or cutter heads, please give drip cap type.

Without cut in window sash

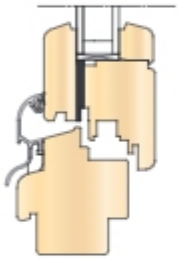

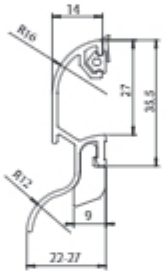

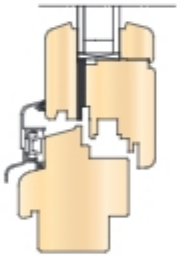

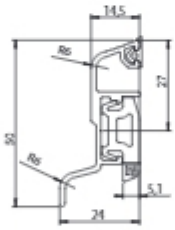

ALURON
AWZ 14 / 22
AWZ 14 / 27

GUTMANN
Spree 24 OF

Gaskets

Pressed gaskets, type **UK** designed for precise sealing of window profiles. When ordering sets for window production, please give type of gasket and profile type.

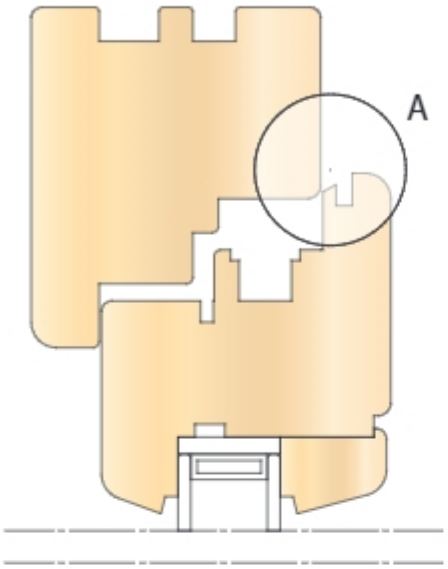

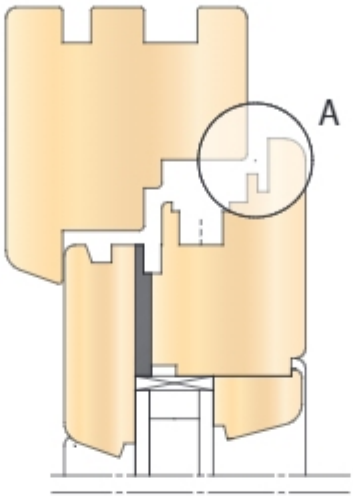

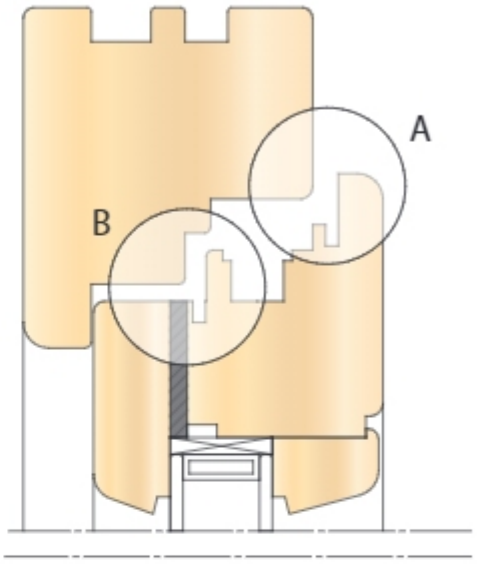

SP 33b

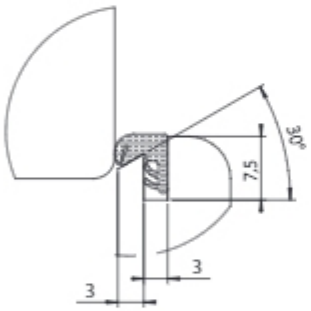

SP 103a

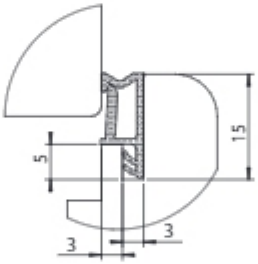

S 7503

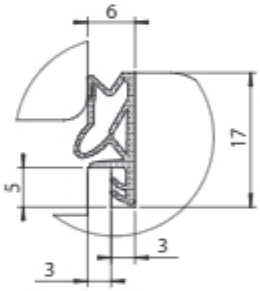

SV 33

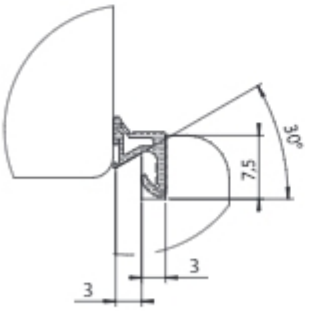

SV 103b

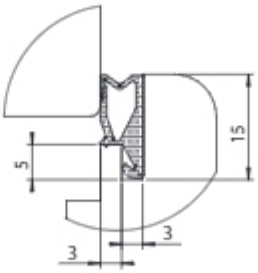

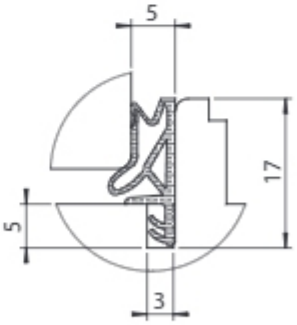

Universal, deformable gasket used for external and internal profiles of window frame. In case of optional gasket (element B) gasketing width is 5 mm.

10

Cutters and cutter heads for panel raising

Brazed profile cutter with four cutting teeth and shear angle, designed for professional machining of solid wood and wood-based materials such as chipboard, MDF and others. The cutter is used for panel raising.

Type of work: panel raising.

Material: solid wood, chipboard, MDF.

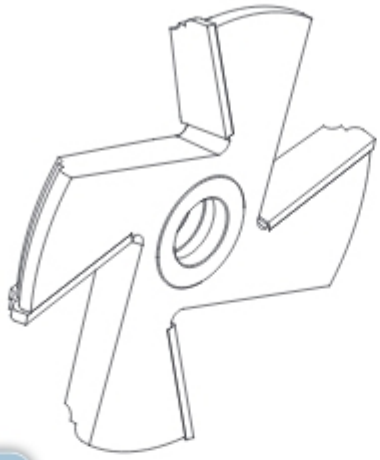





P-201 4.1 P or L

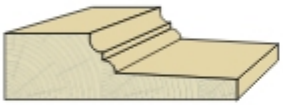

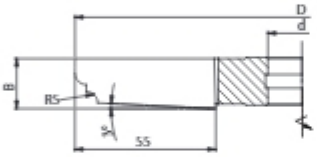

P-202 4.1 P or L



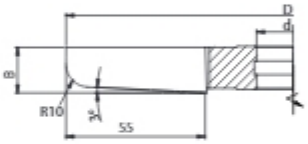

P-203 4.1 P or L



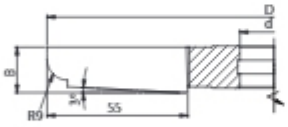

P-204 4.1 P or L



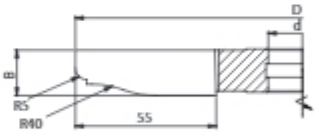

	D d z	140 9000 30 4		160 6000 30 4		180 6000 40 4		200 6000 50 4	
Profile	B mm	HSS	HM	HSS	HM	HSS	HM	HSS	HM
P201	22	+	+	+	+	+	+	+	+
P202, P203, P204	20	+	+	+	+	+	+	+	+

Catalogue number right		Catalogue number left		Type	D mm	B mm	d mm	R mm	z		n_{max}
P201S200P0001	+	P201S200L0001	+	P201	200	22	30	5	4	HSS	6000
P201W200P0001	+	P201W200L0001	+	P201	200	22	30	5	4	HM	6000
P202S200P0001	•	P202S200L0001	+	P202	200	20	30	10	4	HSS	6000
P202W200P0006	+	P202W200L0006	+	P202	200	20	30	10	4	HM	6000
P203S200P0001	•	P203S200L0001	+	P203	200	20	30	9	4	HSS	6000
P203W200P0001	+	P203W200L0001	+	P203	200	20	30	9	4	HM	6000
P204S200P0001	•	P204S200L0001	+	P204	200	20	30	5	4	HSS	6000
P204W200P0002	•	P204W200L0002	+	P204	200	20	30	5	4	HM	6000

GDP-01 P or L

Profile cutter head type **GDP-01** with suitable number of cutting teeth and shear angle, designed for professional machining of solid wood and wood-based materials such as chipboard, MDF and others. The cutter head is used for panel raising.

Type of work: panel raising.

Material: solid wood, chipboard, MDF

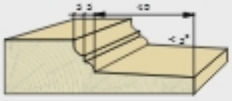

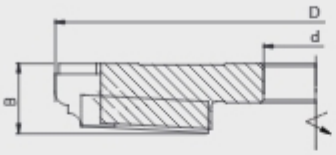

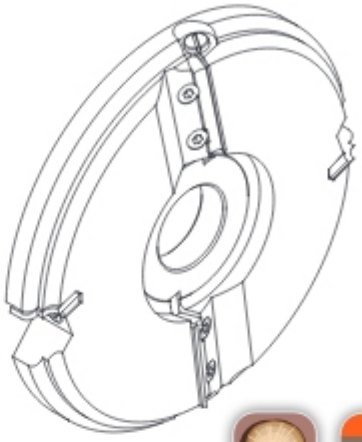

Catalogue number	Type	Profile	D mm	B mm	d mm	z		n_{max}	
GDP-0001P-0	GDP-01	GDP-01	200	26,6	40	2+2	HM	6000	+

Spare parts for cutter head GDP-0001P-0

Cat. nr	Name	Dimensions		
N0000816	Straight knife	49,5x12x1,5		•
N0000939 N0000940	Profile knife R/L	20x24,5x2		+
WHAK00150	Clamping wedge	17x11,5x5,5		•

Cat. nr	Name	Dimensions		
WHAK00149	Clamping wedge	46x11,5x6		•
WHAS00011	Screw TOR 1011	M7x20		•
WHAS00009	Screw TOR 1024	M5x7		•

Other types of cutter heads for panel raising

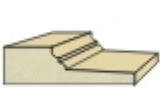

Profile P-201

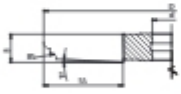



Profile P-202

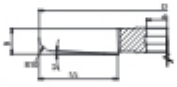



Profile P-203

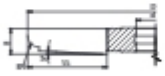



Profile P-204

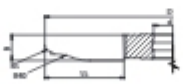

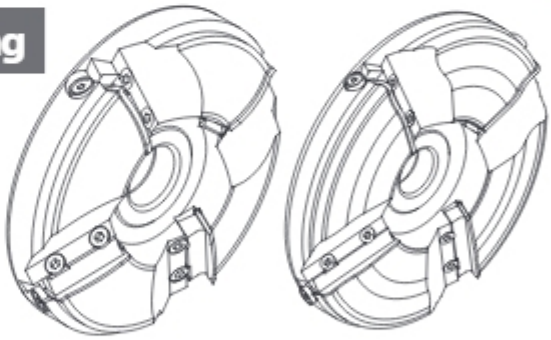

D n d z	140 9000 30 4		160 6000 30 4		180 6000 40 6		215 6000 40 6		250 4500 50 6	
B mm	ST	AL	ST	AL	ST	AL	ST	AL	ST	AL
26,6	+	+	+	+	+	+	+	+	+	+
35,8	+	+	+	+	+	+	+	+	+	+
36,5	+	+	+	+	+	+	+	+	+	+
37,5	+	+	+	+	+	+	+	+	+	+

Catalogue number	Type	Profile	D mm	B mm	d mm	z		n_{max}	
GDP-0065P-0	GDP-01	P-201	200	35	30	4	HM	6000	+
GDP-0034P-0	GDP-01	P-202	200	35,8	30	4	HM	6000	+
GDP-0011P-0	GDP-01	P-203	200	36,5	30	4	HM	6000	+
GDP-0005P-0	GDP-01	P-204	200	37,5	30	4	HM	6000	+

IL-A.00

Set of profile brazed cutters type **IL-A.00** with four cutting teeth, designed for professional machining of solid wood and wood-based materials such as chipboard, MDF and others. The cutter is used for making door internal tenon profiles with radius R10.

Type of work: door internal tenon profiling.

Material: solid wood, chipboard, MDF.

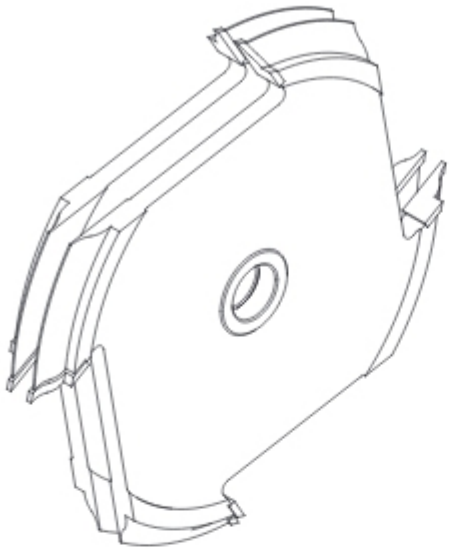

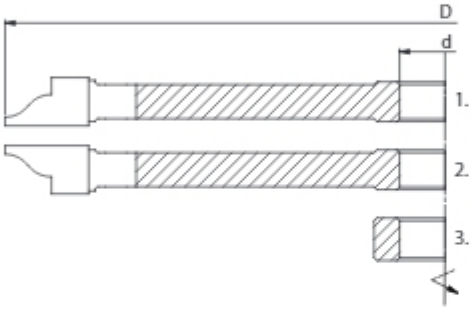

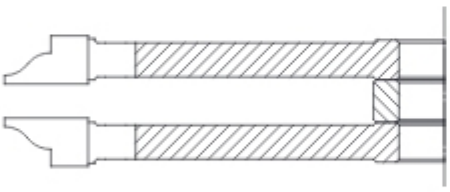

Nr	D mm	B mm	d_{max} mm	n_{max}		
1.	310	17	40	4500	L	+
2.	310	17	40	4500	R	+
3.	60	15	40	Distance ring 1 pc.		+

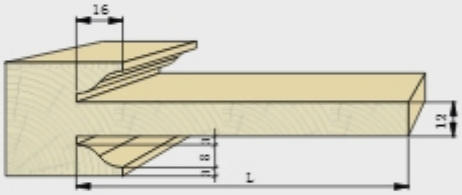





D b d z	148 9000 40 4		160 9000 40 4		180 6000 40 4		280 6000 50 4		310 4500 60 4		330 4500 60 4	
Profile	HSS	HM	HSS	HM	HSS	HM	HSS	HM	HSS	HM	HSS	HM
IL-A	+	+	+	+	+	+	+	+	+	+	+	+

Catalogue number	Type	D mm	d mm	L mm	z		
ILA00S200-001	IL-A	200	30	70	4	HSS	+
ILA00W200-001	IL-A	200	30	70	4	HM	+
ILA00S310-001	IL-A	310	30	117	4	HSS	+
ILA00W310-001	IL-A	310	30	117	4	HM	+
ILA00S310-002	IL-A	310	40	117	4	HSS	+
ILA00W310-002	IL-A	310	40	117	4	HM	+

IL-R.00

Set of profile brazed cutters type **IL-R.00** with four cutting teeth, designed for professional machining of solid wood and wood-based materials such as chipboard, MDF and others. The cutter is used for making door internal tenon counterprofiles.

Type of work: door internal tenon counterprofiling.

Material: solid wood, chipboard, MDF.

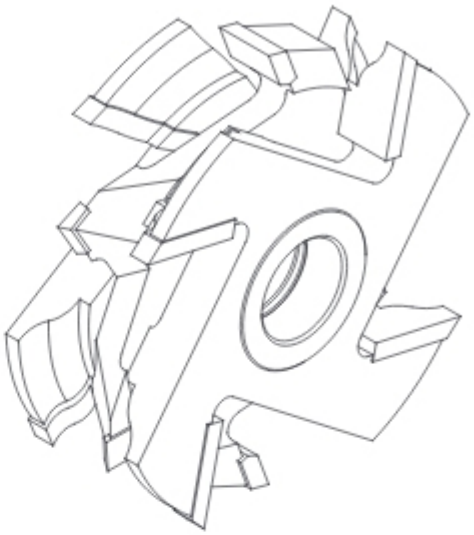

Nr	D mm	B mm	d_{max} mm	n_{max}		
1.	108	19	30	9000	R	+
2.	108	12	30	9000	Symmetrical	+
3.	108	19	30	9000	L	+
4.	60	2	30	Distance ring 2 pcs.		+
1.	148	19	50	9000	R	+
2.	148	12	50	9000	Symmetrical	+
3.	148	19	50	9000	L	+
4.	60	2	50	Distance ring 2 pcs.		+

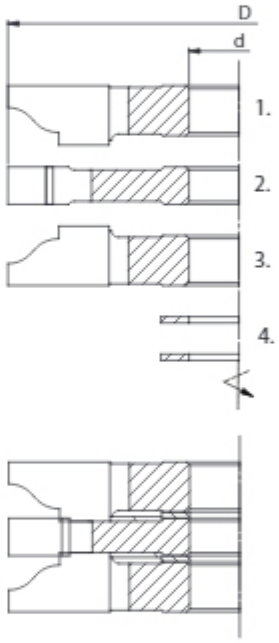

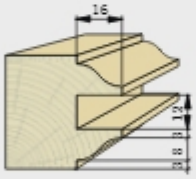





D n_{max} d_{max} z	108 9000 50 4		148 9000 50 4	
Profile	HSS	HM	HSS	HM
IL-R	+	+	+	+

Catalogue number	Type	D mm	d mm	z		
ILR01005108-002	IL-R	108	30	4	HSS	+
ILR0100W108-002	IL-R	108	30	4	HM	+
ILR02005148-007	IL-R	148	30	4	HSS	+
ILR0200W148-009	IL-R	148	30	4	HM	+
ILR02005148-008	IL-R	148	40	4	HSS	+
ILR02005148-009	IL-R	148	50	4	HSS	+

IL-M.00

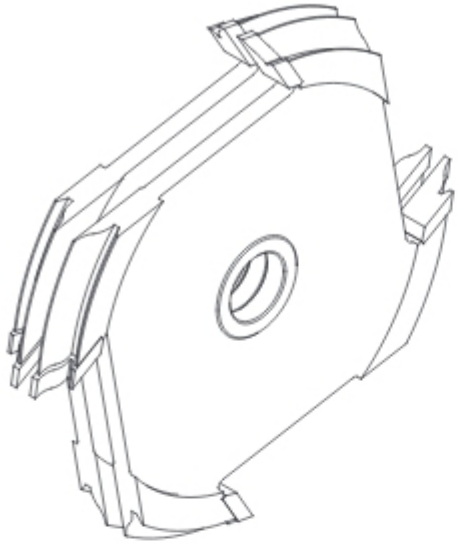

Set of profile brazed cutters type **IL-M.00** with four cutting teeth, designed for professional machining of solid wood and wood-based materials such as chipboard, MDF and others. The cutter is used for making door internal tenon profiles.

Type of work: door internal tenon profiling.

Material: solid wood, chipboard, MDF.

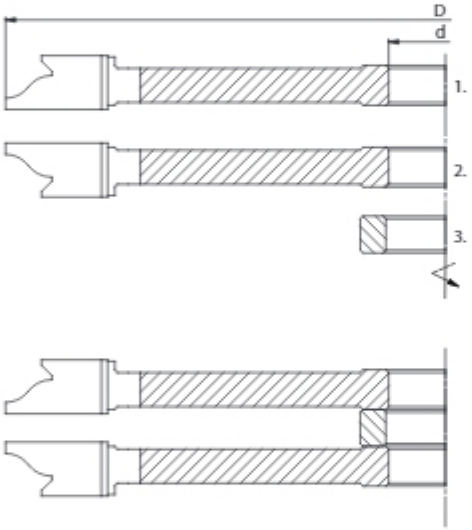

Nr	D mm	B mm	d_{max} mm	n_{max}		
1.	310	18	40	4500	L	+
2.	310	18	40	4500	R	+
3.	60	15	40	Distance ring 1 pc.		+

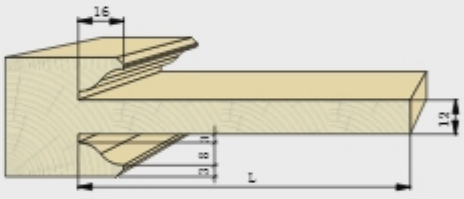

MDF HSS HM

10

D n_{max} d_{max} z	180 6000 40 4		240 6000 40 4		290 4500 40 4		310 4500 50 4	
Profile	HSS	HM	HSS	HM	HSS	HM	HSS	HM
IL-M	+	+	+	+	+	+	+	+

Catalogue number	Type	D mm	d mm	L mm	z		
ILM0400S180-01	IL-M	180	30	50	4	HSS	+
ILM0100W180-01	IL-M	180	40	50	4	HM	+
ILM0400S240-01	IL-M	240	30	80	4	HSS	+
ILM0100W240-01	IL-M	240	30	80	4	HM	+
ILM0400S310-01	IL-M	310	40	105	4	HSS	+
ILM0100W310-01	IL-M	310	40	105	4	HM	+

IL-N.00

Set of profile brazed cutters type **IL-N.00** with four cutting teeth, designed for professional machining of solid wood and wood-based materials such as chipboard, MDF and others. The cutter is used for making door internal tenon counterprofiles.

Type of work: door internal tenon counterprofiling.

Material: solid wood, chipboard, MDF



Nr	D mm	B mm	d_{max} mm	n_{max}		
1.	115	19	30	9000	R	+
2.	108	12	30	9000	Symmetrical	+
3.	115	19	30	9000	L	+
4.	50	2	30	Distance ring 2 pcs.		+

Nr	D mm	B mm	d_{max} mm	n_{max}		
1.	155	19	30	6000	R	+
2.	148	12	30	6000	Symmetrical	+
3.	155	19	30	6000	L	+
4.	50	2	30	Distance ring 2 pcs.		+

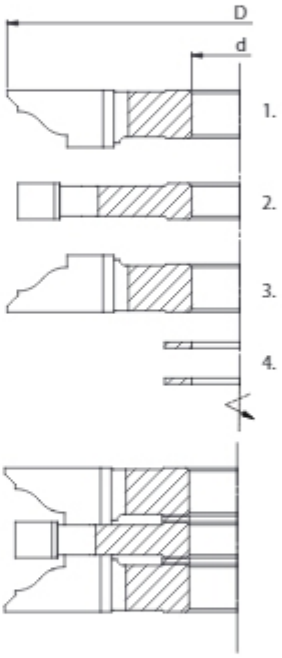

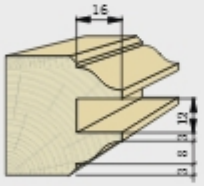

HSS HM MDF

D n_{max} d_{max} z	115 9000 30 4		155 6000 40 4	
Profile	HSS	HM	HSS	HM
IL-N	+	+	+	+

Catalogue number	Type	D mm	d mm	z		
ILN0200S155-02	IL-N	155	30	4	HSS	+
ILN0200W155-02	IL-N	155	30	4	HM	+
ILN0200S155-03	IL-N	155	40	4	HSS	+
ILN0200W155-01	IL-N	155	40	4	HM	+

GD-01

Set of profile cutter heads type **GD-01** with four cutting teeth, designed for professional machining of solid wood and wood-based materials such as chipboard, MDF and others. The cutter is used for making door internal tenon profiles. Width regulated with spacers included in the set.

Type of work: door internal tenon profiling.

Material: solid wood, chipboard, MDF.



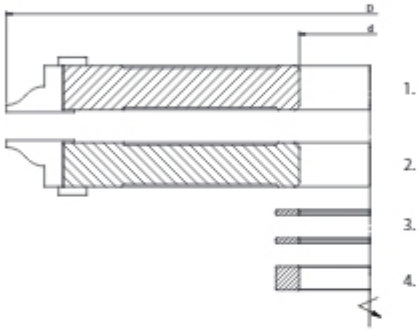

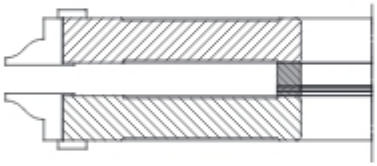

Nr	D mm	B mm	d_{max} mm	n_{max}		
1.	310	19,8	50	4500	L	+
2.	310	19,8	50	4500	R	+
3.		2		Distance ring 2 pcs.		+
4.		10		Distance ring 1 pc.		+

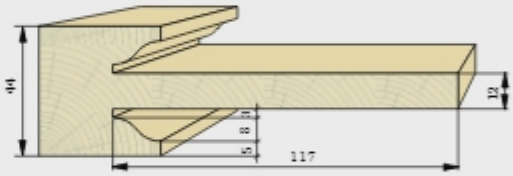





D n_{max} d_{max} z	148 9000 50 4		160 9000 40 4		180 6000 40 4		280 4500 50 4		310 4500 60 4		330 4500 60 4	
Profile	ST	AL	ST	AL	ST	AL	ST	AL	ST	AL	ST	AL
GD-01	+	+	+	+	+	+	+	+	+	+	+	+

Catalogue number	Type	Body	D mm	d mm	z		n_{max}	
GD01-0001-00	GD-01	ST	310	30	4	HM	4500	+
GD01-0002-00	GD-01	ST	310	40	4	HM	4500	+
GD01-0003-00	GD-01	ST	310	50	4	HM	4500	+

Spare parts for cutter head GD-01

Cat. nr	Name	Dimensions		
N0000901 N0000900	Profile knife L/P	19,8x32x2		+
WHAK00034	Clamping wedge	17x10,9x9		+

Cat. nr	Name	Dimensions		
WHAT00044	Locating sleeve	12x3,6x6,5		+
WHAS00011	Screw TOR 1011	M7x20		•
WHAS00006	Screw TOR 1128	M6x10		•

GD-02

Set of profile cutter heads type **GD-02** with four cutting teeth, designed for professional machining of solid wood and wood-based materials such as chipboard, MDF and others. The cutter is used for making door internal tenon counterprofiles. Width regulated with spacers included in the set.

Type of work: door internal tenon counterprofiling.

Material: solid wood, chipboard, MDF.

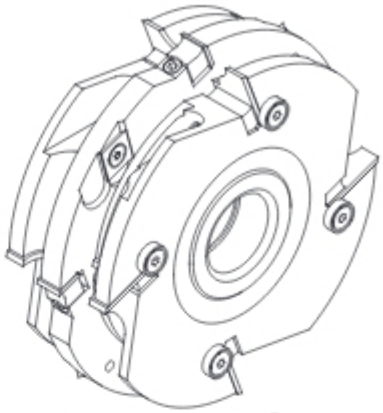

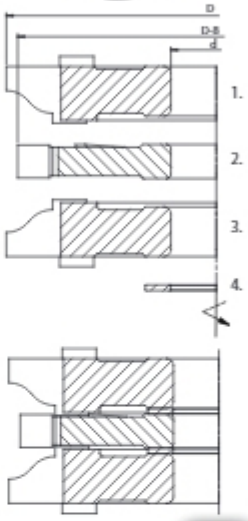

Nr	D mm	B mm	d_{max} mm	n_{max}		
1.	148	20	60	9000	R	+
2.	140	12	60	9000	Symmetrical	+
3.	148	20	60	9000	L	+
4.		2		Distance ring 2 pcs.		+

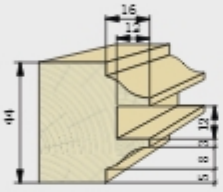





D n_{max} d_{max} z	122 9000 40 4		125 9000 40 4		148 9000 60 4		164 6000 60 4	
Profile	ST	AL	ST	AL	ST	AL	ST	AL
GD-02	+	+	+	+	+	+	+	+

Catalogue number	Type	Body	D mm	d mm	z		n_{max}	
GD02-0001-00	GD-02	ST	148	30	4	HM	9000	+
GD02-0002-00	GD-02	ST	148	40	4	HM	9000	+
GD02-0003-00	GD-02	ST	148	50	4	HM	9000	+
GD02-0005-00	GD-02	ST	148	60	4	HM	9000	+

Spare parts for cutter head GD-02

Cat. nr	Name	Dimensions		
N0000803	Stright knife	11,6x12x1,5		•
N0000935 N0000936	Profile knife L/P	20x30x2		+
N0000818	Spur	14x14x2		•
WHAK00049	Clamping wedge	18x11,5x5,5		+
WHAK00026	Clamping wedge	10x10x9		+

Cat. nr	Name	Dimensions		
WHAT00044	Locating sleeve	12x3,6x6,5		+
WHAS00006	Screw TOR 1128	M6x10		•
WHAS00008	Screw TOR 1064	M5x6,5		•
WHAW00005	Push screw	M8x16		•
WHAS00007	Screw TOR 1262	M5x23		•

GD-03

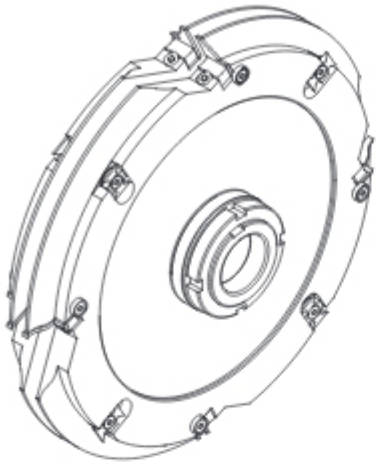

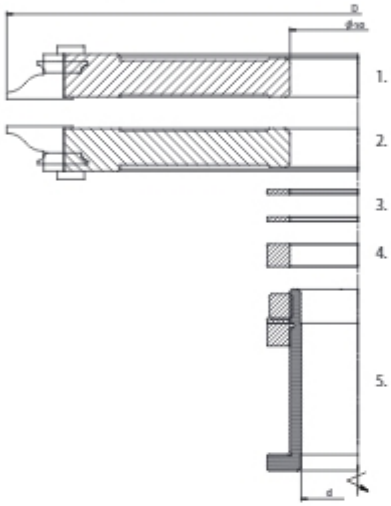

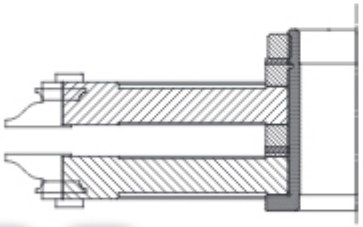

Set of profile cutter heads type **GD-03** with four cutting teeth, designed for professional machining of solid wood and wood-based materials such as chipboard, MDF and others. The cutter is used for making door internal tenon profiles. Width regulated with spacers included in the set. The set mounted on a sleeve (for d_{max} = 40 mm).

Type of work: door internal tenon profiling.

Material: solid wood, chipboard, MDF.

Nr	D mm	B mm	d_{max}* mm	n_{max}		
1.	310	19,8	50	4500	L	+
2.	310	19,8	50	4500	R	+
3.	70	2	50	Distance ring 2 pcs.		+
4.	70	10	50	Distance ring 1 pc.		+
5.	50	80	40	Sleeve 1 pc.		+

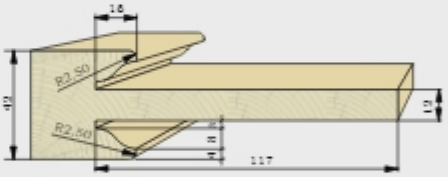





Catalogue number	Type	Body	D mm	d mm	z		n_{max}	
GD03-0001P-00	GD-03	ST	310	30	4	HM	4500	+
GD03-0002P-00	GD-03	ST	310	40	4	HM	4500	+

Spare parts for cutter head GD-03

Cat. nr	Name	Dimensions		
N0000874	Knife FKB-R	22x16x5		•
N0000901 N0000900	Profile knife L/P	19,8x32x2		+
WHAK00034	Clamping wedge	17x10,5x9		+
WHAT00044	Locating sleeve	12x3,6x6,5		+

Cat. nr	Name	Dimensions		
WHAS00011	Screw TOR 1011	M7x20		•
WHAS00006	Screw TOR 1128	M6x10		•
	Sleeve	50/dx80		+

* d_{max}=50 mm - for set without a sleeve. For set with a sleeve d_{max}=40 mm (45mm).

On request, we offer the set without a sleeve.

GD-04

Set of profile cutter heads type **GD-04** with four cutting teeth, designed for professional machining of solid wood and wood-based materials such as chipboard, MDF and others. The cutter is used for making door internal tenon counterprofiles. Width regulated with spacers included in the set. The set mounted on a sleeve (for d_{max} = 40 mm).

Type of work: door internal tenon counterprofiling.

Material: solid wood, chipboard, MDF.

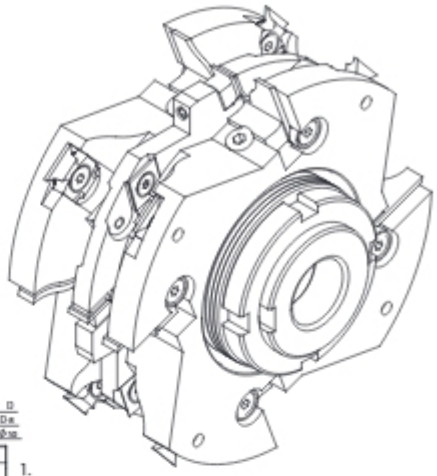

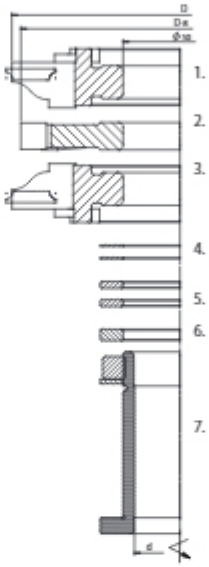

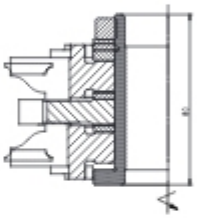

Nr	D mm	B mm	d_{max}* mm	n_{max}		
1.	148	26	50	9000	R	+
2.	140	12	50	9000		+
3.	148	26	50	9000	L	+
4.	70	0,5	50	Distance ring 2 pcs.		+
5.	70	3	50	Distance ring 3 pcs.		+
6.	70	5	50	Distance ring 1 pc.		
7.	50	80	40	Sleeve 1 pc.		+

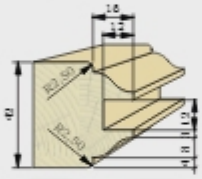





D n_{max} d_{max} z	125 9000 30 4		132 9000 40 4		148 9000 50 4		150 9000 50 4	
Profile	ST	AL	ST	AL	ST	AL	ST	AL
GD-04	+	+	+	+	+	+	+	+

Catalogue number	Type	Body	D mm	d mm	z		n_{max}	
GD04-0001P-00	GD-04	ST	148	30	4	HM	9000	+
GD04-0002P-00	GD-04	ST	148	40	4	HM	9000	+

Spare parts for cutter head GD-04

Cat. nr	Name	Dimensions		
N0000803	Stright knife	11,6x12x1,5		•
N0000935 N0000936	Profile knife L/P	20x30x2		+
N0000874	Knife FKB-R	16x22x5		•
N0000818	Spur	14x14x2		•
WHAK00010	Clamping wedge	18x10x9		+
WHAK00062	Clamping wedge	10x11,5x5,8		+

Cat. nr	Name	Dimensions		
WHAT00044	Locating sleeve	12x3,6x6,5		+
WHAS00008	Screw TOR 1064	M5x6,5		•
WHAS00007	Screw TOR 1262	M5x23		•
WHAS00006	Screw TOR 1128	M6x10		•
WHAS00011	Screw TOR 1011	M7x20		•
	Sleeve	50/dx80		+

* d_{max}=50 mm - for set without a sleeve. For set with a sleeve d_{max}=40 mm (45mm).

GD-10

Set of profile cutter heads type **GD-10** with suitable number of cutting teeth, designed for professional machining of solid wood and wood-based materials such as chipboard, MDF and others. The cutter is used for rebating door internal profiles. Width regulated with spacers included in the set.

Type of work: door internal tenon profiling.

Material: solid wood, chipboard, MDF.

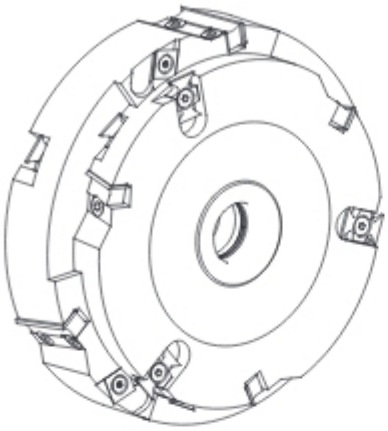

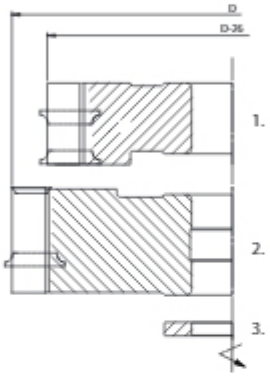

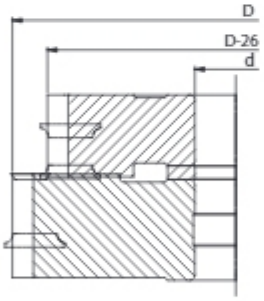

Nr	D mm	B mm	d_{max} mm	n_{max}		
1.	200	40	60	6000	R	+
2.	174	20	60	6000	L	+
3.		6		Distance ring 1 pc.		+

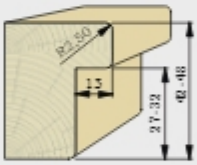





Catalogue number	Type	Body	D mm	d mm	z		n_{max}	
GD10-0001P-00	GD-10	ST	200	30	3	HM	6000	+
GD10-0002P-00	GD-10	ST	200	40	3	HM	6000	+
GD10-0003P-00	GD-10	ST	200	50	3	HM	6000	+

Spare parts for cutter head GD-04

Cat. nr	Name	Dimensions		
N0000809	Stright knife	40x12x1,5		+
N0000805	Stright knife	20x12x1,5		+
N0000874	Knife FKB-R	16x22x5		•
WHAK00009	Clamping wedge	37x10x9		+

Cat. nr	Name	Dimensions		
WHAK00034	Clamping wedge	17x10x9		+
WHAS00011	Screw TOR 1011	M7x20		•
WHAS00006	Screw TOR 1128	M6x10		•

FABA

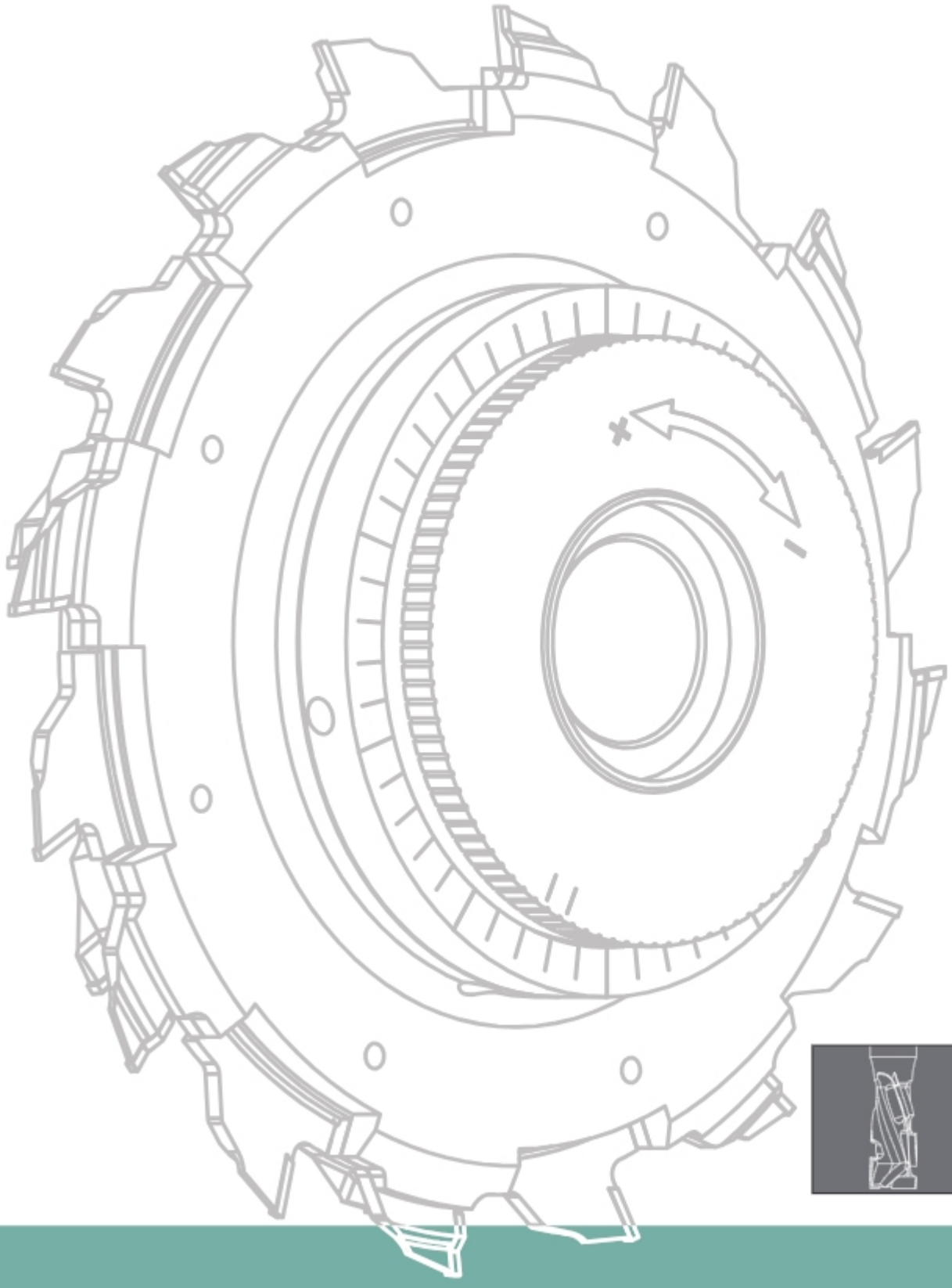



11. DIA tools

DIA tools

Tools with DIA tips designed for professional machining of solid wood and other wood-based materials such as chipboard, laminates, MDF, HDF, PVC and CORIAN. Use and selection of a proper diamond significantly increases life of tools in comparison with traditional tools with carbide (HM) blades.

The *DIA tools* chapter includes only example types and models of tools with DIA blades. The main part of our offer are special tools designed and manufactured on client's special request, meeting buyer's specific demands. Before we start designing and production process we take into consideration many issues connected with client's requirements such as expected machining quality, type and parameters of the machine, workpiece material and many others. Every DIA special tool or set of tools is properly selected for the type of work, parameters and conditions prevailing during the machining, in order to guarantee proper work of the tool, both in standard and extreme conditions.

DIA tools are produced with various clamping types, however, we put special focus on hydro clamping or all types of clamping on conical HSK shanks. The clamping construction guarantee run-out tolerance reduced to minimum. Thanks to hydro system, which allows for perfect balancing of the tool, we obtain very high surface quality and ability to work with high cutting and feed speed.

All types of cutter heads are manufactured on modern CNC machines of world-renowned producers, which guarantee high accuracy and precision of the produced tools. The construction and production remains in accordance with all points of safety standard EN/PN-847-1 concerning tools for mechanical woodworking. Time of design and production process of cutters or catalogue sets marked with "+"as well as special tools made on client's special request usually doesn't exceed 10-15 working days after agreeing all the details.

Orders should include:

- outer diameter (D) or diameters range,
- bore diameter (d),
- number of teeth (z) or spindle rotation speed and feed speed,
- type of machined material,
- profile drawing with dimensions or profile sample,
- other information relevant for designing and production process.



Contents

11. DIA tools

Pictograms 11.4

Tooth configuration 11.5

Technical parameters 11.5

11.1 Straight shank cutters 11.6

11.2 Turbo shank cutters 11.14

11.3 Profile shank cutters 11.22

11.4 Straight brazed cutters 11.27

11.5 Sets of brazed cutters 11.33

11.6 Profile brazed cutters 11.35

11.7 Inserted hoggers 11.43

11.8 Scoring saw blades 11.49

11.9 Saw blades 11.54

Pictograms


solid dry hardwood


hard exotic wood


chipboard


plywood


laminated board



MDF



HDF



HPL



plastics



construction board


corian


single cut


multi-rip saw blade


cutting in stack


cylinder boring bits


scoring saw blade



aluminiuum body


cross and longitudinal cut


formatting


rebating


grooving


edge machining


profiling


mechanical feed


manual feed



CNC machine



DIA blade



carbide



non-resharpenable



2-3 times resharpenable



4-6 times resharpenable



5-6 times resharpenable



7-9 times resharpenable



multiple resharpening

- available / stock product
+ production time 9–15 working days.

Tooth configuration

GM

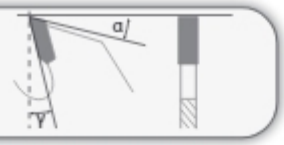

flat

GA

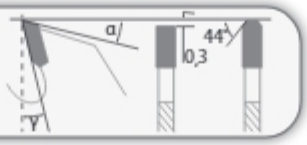

triple-chip + flat

GT

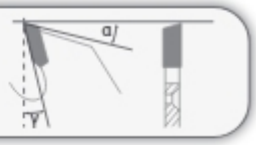

top bevel, right

GS

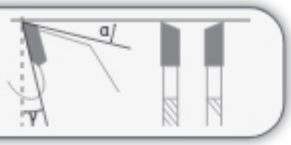

alternate top bevel

GR/GM



conical-flat

GW

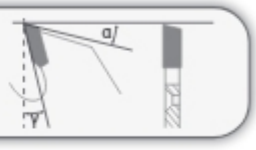

top bevel, left

Teeth

Cutters with shear angle are designed for working on CNC centres: IMA, Reichenbaher, Homag, Bisse.
They are used for rebating, grooving and formating. Drilling blade is made from HM.

Cutters' construction guarantees:

- quiet and stable work,
- better surface quality,
- increased life.

Type of material:

- MDF, HDF,
- chipboard,
- laminated chipboard,
- CORIAN,
- laminates,
- hard exotic wood.

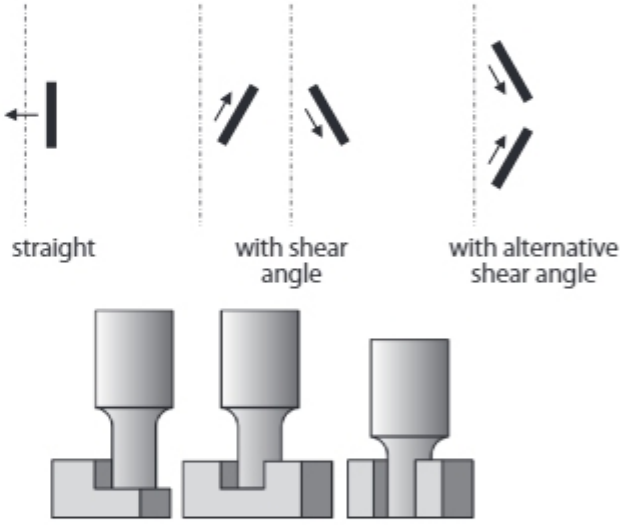

straight | with shear angle | with alternative shear angle

Technical parameters TJD group

Diagrams determining P (minute feed) in relation to height of the removed material a.

Type of work: formatting with drilling ability.

Rotation speed:

D = 10 ÷ 12 mm; n = 18 000 ÷ 24 000 obr/min
D = 14 ÷ 20 mm; n = 16 000 ÷ 24 000 obr/min

Teeth number:

z = 1 and z=1+1

Drilling blade HM, optionally DP.

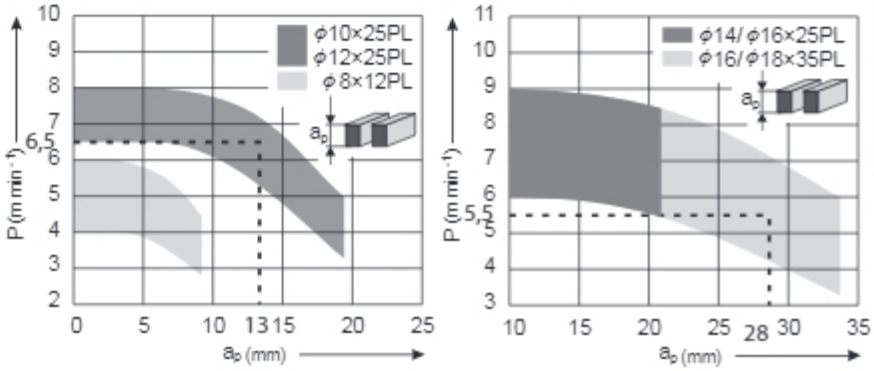

TJD-01



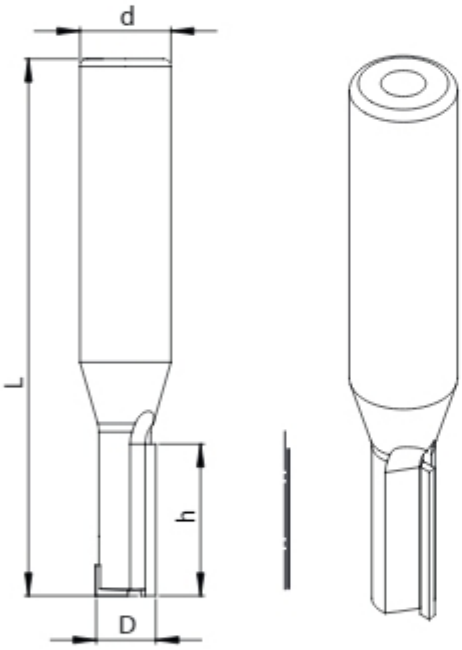

Straight shank cutters type **TJD-01**.

Type of work: formatting, splitting, rebating, grooving and copying on CNC machines. Used especially for making very small inner radiuses.

Material: solid hardwood, chipboard, plywood, MDF, HDF, construction board, plastics.

Specification:

- polished PCD surface,
- PCD drilling blade,
- optional body from HM or special alloy in order to increase stiffness and life of the tool,
- sharpening zone 0,5-1,5 mm,
- P_{max} = 2-3 m/min.
- n_{max}=24 000 r.p.m.





Catalogue number	Type	D mm	h mm	d mm	L mm	z		
TJD01.0102B	TJD-01	8	20	12	70	1	R	•
TJD01.0102BL	TJD-01	8	20	12	70	1	L	+
TJD001.8350HM	TJD-01	10	22	12	81	2	R	•
TJD01.029G	TJD-01	10	25	12	71	1	R	•
TJD01.028G	TJD-01	10	20	12	66	1	R	+
TJD01.028GL	TJD-01	10	20	12	66	1	L	+
TJD01.029GL	TJD-01	10	25	12	71	1	L	+

TJD-06

Straight shank cutters type **TJD-06**

Type of work: grooving, rebating, drilling on CNC machines.

Material: solid hardwood, laminated materials, chipboard, plywood, MDF, HDF.

Specification:

- high quality machining,
- drilling ability,
- negative hook angle,
- PCD Drilling blade,
- resharpenable 2-3 times,
- P_{max} = 3-6 m/min.
- n_{max}=24 000 r.p.m.

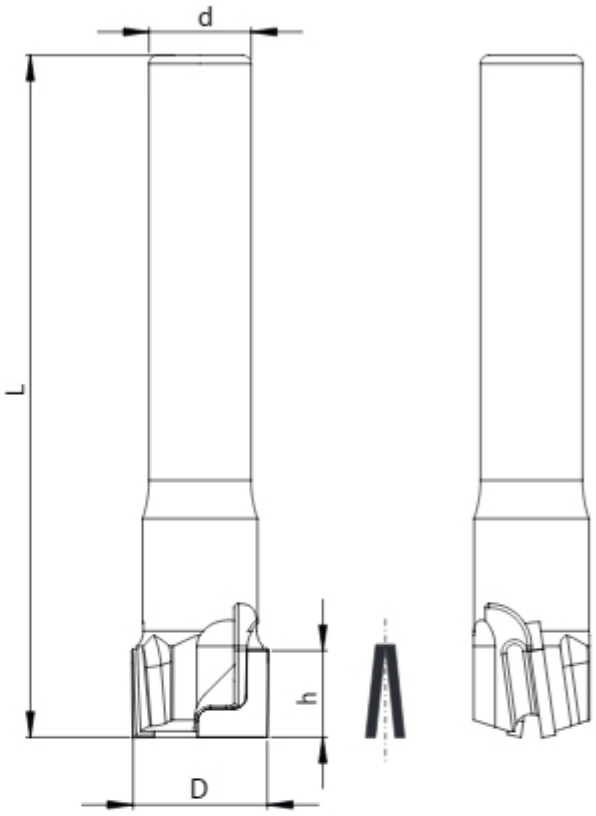





Catalogue number	Type	D mm	h mm	d mm	L mm	z		
TJD006.6010	TJD-06	6	6	12	60	1	R	+
TJD006.3570HM	TJD-06	6	15	6	66	1	R	•
TJD006.6020	TJD-06	8	6	12	60	1	R	+
TJD006.6030	TJD-06	10	8	12	65	2	R	+
TJD006.6040	TJD-06	10	12	12	67	2	R	+
TJD006.6050	TJD-06	12	12	12	70	2	R	+
TJD006.6060	TJD-06	16	16	12	80	2	R	+
TJD006.6070	TJD-06	20	10	12	80	2	R	+
TJD006.6080	TJD-06	20	15	12	80	2	R	+
TJD006.6090	TJD-06	25	10	12	85	2	R	+
TJD006.6100	TJD-06	30	15	12	90	2	R	+

TJD-07



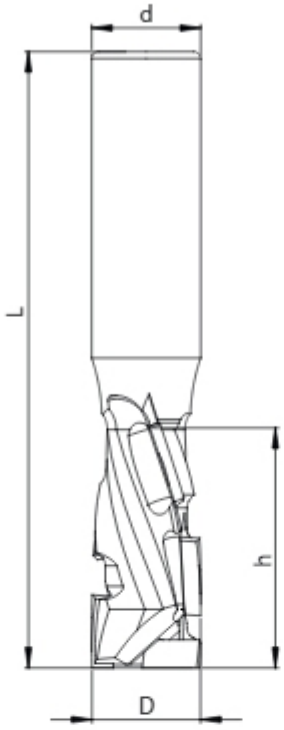

Straight shank cutters type **TJD-07** resharpenable 2-3 times.

Type of work: formatting, splitting, rebating.
Material: solid hardwood, laminated materials, chipboard, plywood, MDF, HDF.

Specification:

- blades positions at big shear angle guarantee quiet and stable work,
- long life,
- HM drilling blade (PCD on request),
- spiral blades guarantee high cutting quality, lower cutting resistance and longer life of the blade,
- P_{max} = 3-6 m/min,
- N_{max}=24000 r.p.m.

We offer all cutters also in "L" version.

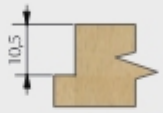

Minimum rebate size of laminated material.





Catalogue number	Type	D mm	h mm	d mm	L mm	z		
TJD007.0460	TJD-07	10	25	12	76	1+1	R	•
TJD007.4910	TJD-07	10	35	12	88	1+1	R	•
TJD007.0040R	TJD-07	12	25	12	78	1+1	R	•
TJD007.0050R	TJD-07	12	35	12	88	1+1	R	+
TJD007.0181	TJD-07	14	25	16	81	1+1	R	+
TJD007.0092	TJD-07	14	35	16	81	1+1	R	+
TJD007.0021R	TJD-07	16	25	16	81	1+1	R	•
TJD007.0020R	TJD-07	16	25	25	91	1+1	R	+
TJD007.0030R	TJD-07	16	35	16	91	1+1	R	+
TJD007.0030RL	TJD-07	16	35	16	91	1+1	L	+
TJD007.0034R	TJD-07	16	35	25	96	1+1	R	+
TJD007.0171R	TJD-07	16	43	16	100	1+1	R	•
TJD007.0080R	TJD-07	18	35	25	96	1+1	R	•
TJD007.0061R	TJD-07	18	43	20	109	1+1	R	•
TJD007.0060R	TJD-07	18	43	25	109	1+1	R	•
TJD007.0392	TJD-07	18	52	25	112	1+1	R	+
TJD007.0120R	TJD-07	20	25	20	86	1+1	R	•
TJD007.0150R	TJD-07	20	35	20	96	1+1	R	•
TJD007.0071R	TJD-07	20	43	20	109	1+1	R	•
TJD007.0270R	TJD-07	20	52	20	112	1+1	R	•

TJD-073

Economical straight shank cutters type **TJD-073** resharpenable 3-4 times. New design of the **TJD-073** cutter, including cutting tips position allows for better chip flow during work which results in increased life of the tool and better cutting quality. Shank cutters are designed for top-spindle CNC routers.

Type of work: formatting, splitting, rebating.
Material: laminated materials, chipboard, plywood, MDF, HDF.
Specification:

- blades positions at big shear angle guarantee quiet and stable work,
- long life,
- spiral blades guarantee high cutting quality, lower cutting resistance and longer life of the blade,

We offer all cutters also in "L" version.

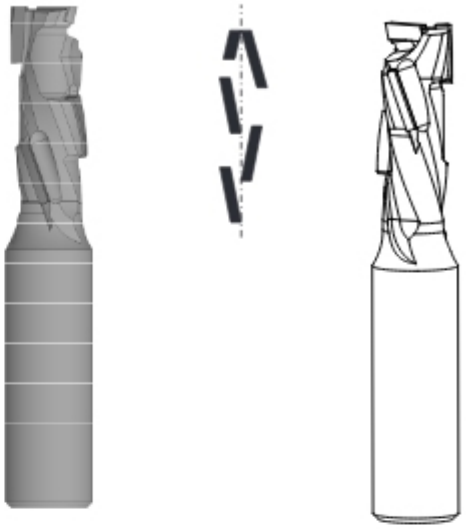

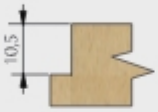

Minimum rebate size of laminated material.

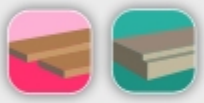







Catalogue number	Type	D mm	h mm	d mm	L mm	z		
TJD073.0050	TJD-073	12	35	12	88	1+1	R	•
TJD073.1260	TJD-073	12	44	12	95	1+1	R	•
TJD073.0254	TJD-073	14	44	12	100	1+1	R	•
TJD073.0030	TJD-073	16	35	16	91	1+1	R	•
TJD073.4790	TJD-073	16	52	16	115	1+1	R	•

TJD-073S

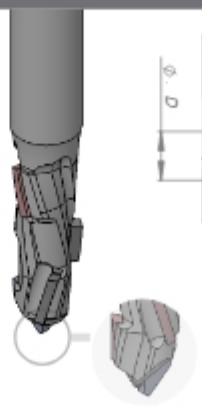

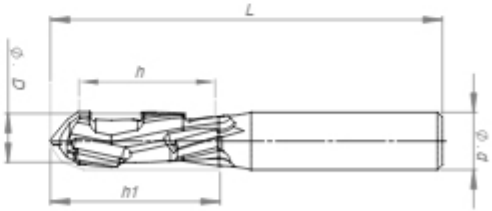

Conical DIA tip



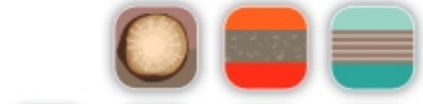



Catalogue number	Type	D mm	h mm	h1 mm	d mm	L mm	z		
TJD073.0460S	TJD-073S	10	25	30	12	88	1+1 DIA	R	•
TJD073.0050S	TJD-073S	12	30	37	12	92	1+1 DIA	R	•

TJD-08



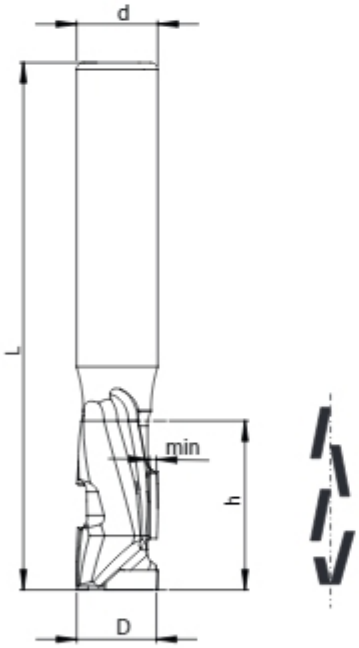

Straight shank cutters type **TJD-08** single use (non- resharpenable). Used PKD tip has been reduced to minimum, so that the cutters are not subject to resharpening and costly regeneration. Shank cutters type TJD-08 are convenient offer for companies processing wood-based materials and plastics on CNC routers.

Type of work: formatting, splitting, rebating

Material: chipboard, plywood, MDF, HDF, plastics

Specification:

- one positioning of the machine without corrections after resharpening,
- no problems with servicing (regeneration),
- very low price,
- long life and cutting quality,
- P_{max} = 3-6 m/min.
- N_{max}=24 000 r.p.m.

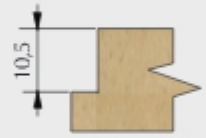

Minimum rebate size of laminated material.



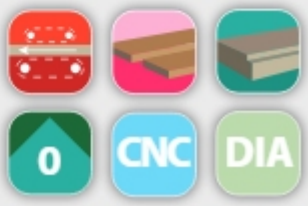

Catalogue number	Type	D mm	h mm	d mm	L mm	z		
TJD008.1240	TJD-08	12	24	12	78	1+1	R	•
TJD008.0022	TJD-08	16	25	16	81	1+1	R	+
TJD008.0051	TJD-08	12	35	12	88	1+1	R	•
TJD008.0032	TJD-08	16	35	16	91	1+1	R	•

TJD-10

Shank cutter with multiple resharpening possibility typ **TJD-10** designed for formatting on CNC machines. The tool can work with left or right rotation to avoid material chipping.

Type of work: formatting.

Material: chipboard, MDF.

Specification:

- highly efficient formatting of laminated materials with perfect edge quality,
- works with both rotation directions,
- P_{max} = 14 m/min.
- N_{max} = 24 000 r.p.m.



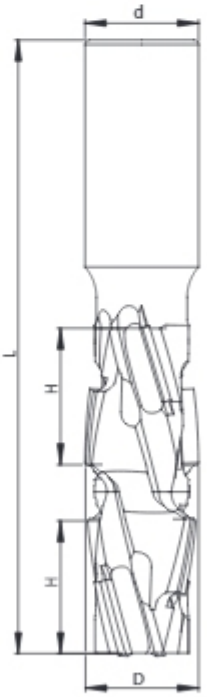







Catalogue number	Type	D mm	H2 mm	d mm	L mm	z	
TJD010.0100	TJD-10	25	30	25	135	1+1	+

TDT-08A

Econiomical turbo shank cutters type **TDT-08A** z=2+2 designed for CNC routers.

Type of work: formatting, curvilinear splitting, grooving rebating.

Material: chipboard, plywood, MDF, HDF, laminates.

Specification:

- tools construction guarantees higly efficient cutting with perfect edge quality thanks to blades with positive and negative shear angle,
- increased teeth number z=2+2 enables for feed speed up to 12-14 m/min,
- HM or PCD drilling blad,
- P_{max} = 8-10 m/min,
- n_{max} = 24 000 rpm.

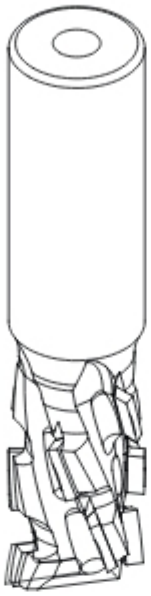

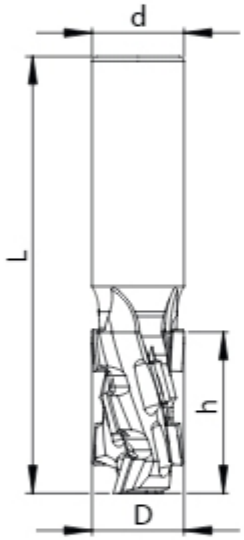



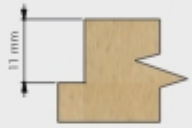

Minimum rebate size of laminated material.



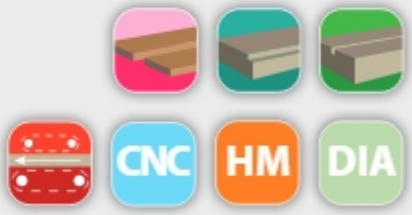

Catalogue number	Type	D mm	h mm	d mm	L mm	z		
TDT08A.0850	TDT-08A	12	23	12	80	2+2 DIA	R	•
TDT08A.0440	TDT-08A	16	20	20	80	2+2 HM	R	+
TDT08A.0451	TDT-08A	16	27	16	90	2+2 HM	R	•
TDT08A.0450	TDT-08A	16	27	20	90	2+2 HM	R	•
TDT08A.0065	TDT-08A	16	35	16	95	2+2 DIA	R	•
TDT08A.0595	TDT-08A	16	45	16	105	2+2 DIA	R	•
TDT08A.0460	TDT-08A	18	27	20	90	2+2 HM	R	+
TDT08A.0470	TDT-08A	18	35	20	95	2+2 DIA	R	•
TDT08A.0480	TDT-08A	18	45	20	105	2+2 DIA	R	+
TDT08A.0490	TDT-08A	20	27	20	90	2+2 HM	R	+
TDT08A.0500	TDT-08A	20	35	20	95	2+2 DIA	R	+
TDT08A.0510	TDT-08A	20	45	20	105	2+2 DIA	R	+
TDT08A.0520	TDT-08A	20	54	20	115	2+2 DIA	R	+

TD-04

Straight shank cutters type **TD-04**, with multiple resharpening possibility.

Type of work: formatting, splitting, rebating.

Material: solid hardwood, chipboard, plywood, MDF, HDF, laminates.

Specification:

- P_{max} = 3-6 m/min,
- N_{max}=24 000 r.p.m.

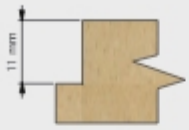

Minimum rebate size of laminated material.

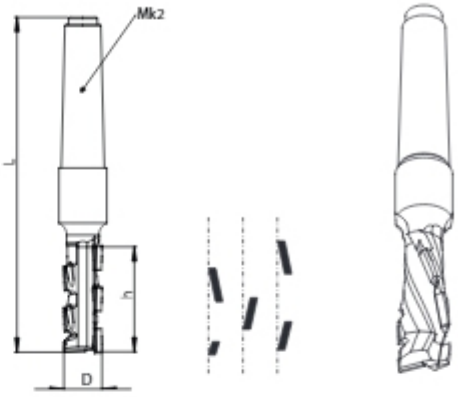

Catalogue number	Type	D mm	h mm	d mm	L mm	z		
TD04.010	TD-04	16	25	Mk2	140	1+1	R	+
TD04.010L	TD-04	16	25	Mk2	140	1+1	L	+
TD04.020	TD-04	16	35	Mk2	150	1+1	R	+
TD04.020L	TD-04	16	35	Mk2	150	1+1	L	+

TD-008

Shank cutters type **TD-008** for box hinge. Special blade geometry guarantees high quality of the machined slot and long life of the tool.

Type of work: dowel drilling.

Material: glued wood, chipboard, plywood, MDF and others.

Specification:

- P_{max} = 3-6 m/min,
- N_{max}=24 000 r.p.m.

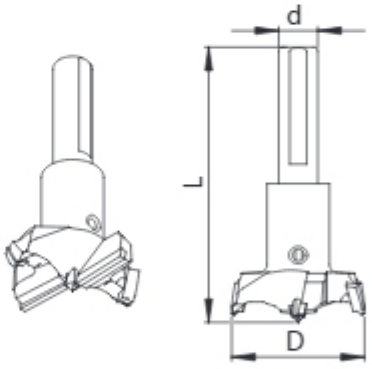

Catalogue number	Type	D mm	h mm	d mm	L mm	z	n_{max}		
TD008.8010	TD008	15	7	10	57	2+2	24000	R	+
TD008.8020	TD008	20	7	10	57	2+2	24000	R	+
TD008.8030	TD008	25	7	10	57	2+2	24000	R	+
TD008.8040	TD008	30	7	10	57	2+2	24000	R	+
TD008.8050	TD008	35	7	10	57	2+2	24000	R	+
TD008.8060	TD008	40	7	10	57	2+2	18000	R	+
TD008.8070	TD008	50	7	10	57	2+2	18000	R	+
TD008.8080	TD008	60	7	10	57	2+2	18000	R	+
TD008.8090	TD008	65	7	10	57	2+2	18000	R	+

TDT-01

Turbo shank cutter type **TDT-01** for formatting and splitting on CNC routers.

Type of work: formatting, splitting.

Material: chipboard, MDF, HPL, veneer, laminated materials.

Specification:

- high performance in roughing and finishing,
- very high cutting quality on bottom and top edge of the machined material thanks to alternative cutting angles,
- sharpening zone 3 mm,
- P_{max} in splitting = 15 m/min.
- P_{max} in formatting = 20 m/min.
- N_{max} =24 000 r.p.m.



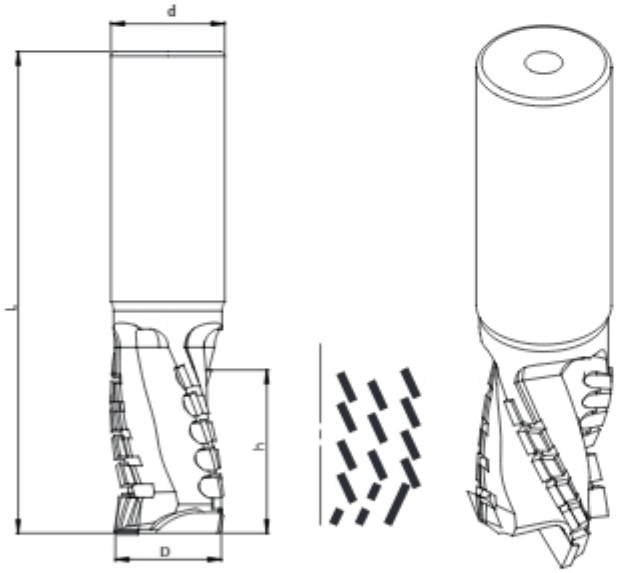

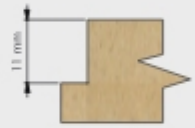

Minimum rebate size of laminated material.

MDF HDF HPL

5-6 CNC DIA

Catalogue number	Type	D mm	h mm	d mm	L mm	z		
TDT01.018C	TDT-01	18	40	25	122	3+3	R	+
TDT01.018CL	TDT-01	18	40	25	122	3+3	L	+
TDT01.025	TDT-01	25	40	25	122	3+3	R	+
TDT01.025L	TDT-01	25	40	25	122	3+3	L	+
TDT01.02025	TDT-01	20	40	25	122	3+3	R	+
TDT01.02025L	TDT-01	20	40	25	122	3+3	L	+

TDT-04

Turbo shank cutter type **TDT-04** designed for roughing and finishing.

Type of work: roughing and finishing.
Material: solid hardwood, exotic hardwood, MDF, HPL, veneered board, plastics.

Specification:
- PCD drilling blade,
- on request we offer increased density of cutting lines z=4+4 with Ø more than 20 mm,
- P_{max} = 12 - 16 m/min,
- N_{max}=24 000 r.p.m.

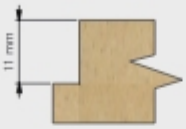

Minimum rebate size of laminated material.

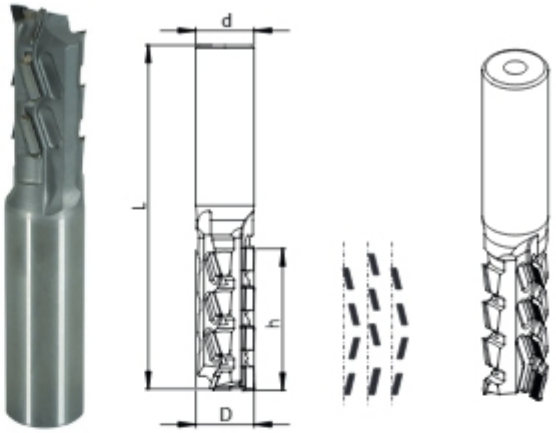

Catalogue number	Type	D mm	h mm	d mm	L mm	z		
TDT04.601	TDT-04	18	40	20	103	3+3	R	+
TDT04.601L	TDT-04	18	40	20	103	3+3	L	+
TDT04.602	TDT-04	20	40	20	103	3+3	R	+
TDT04.602L	TDT-04	20	40	20	103	3+3	L	+
TDT04.603	TDT-04	20	50	20	113	3+3	R	+
TDT04.603L	TDT-04	20	50	20	113	3+3	L	+
TDT04.605	TDT-04	25	50	25	103	3+3	R	+
TDT04.605L	TDT-04	25	50	25	103	3+3	L	+
TDT04.702	TDT-04	25	50	25	113	3+3	R	+
TDT04.702L	TDT-04	25	50	25	113	3+3	L	+

TDT-06

Turbo shank cutter type **TDT-06** designed for roughing and finishing.

Type of work: roughing and finishing.
Material: solid hardwood, exotic hardwood, MDF, HPL, veneered board, plastics.

Specification:
- PCD drilling blade,
- On request we offer increased density of cutting lines z=4+4 with Ø more than 20 mm.

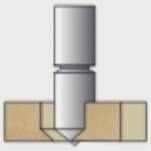

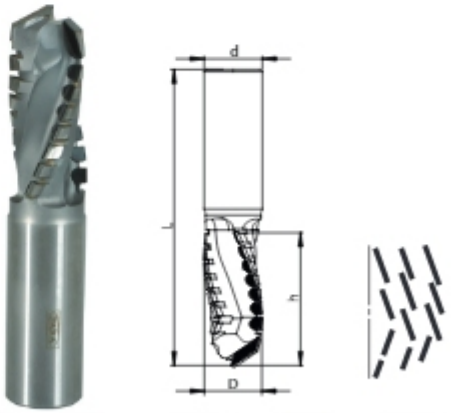

Catalogue number	Type	D mm	h mm	d mm	L mm	z		
TDT06.007	TDT-06	25	57	25	120	3+3	R	+
TDT06.007L	TDT-06	25	57	25	120	3+3	L	+

TDT-07



Highly efficient turbo shank cutter type **TDT-07** designed for formatting and splitting on CNC routers.

Type of work: formatting and splitting.

Material: chipboard, MDF, melamine and laminated boards.

Specification:

- optimal chip flow,
- HM drilling blade,
- P_{max} = 12 m/min.
- N_{max}=24 000 r.p.m.

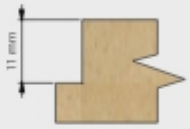

Minimum rebate size of laminated material.

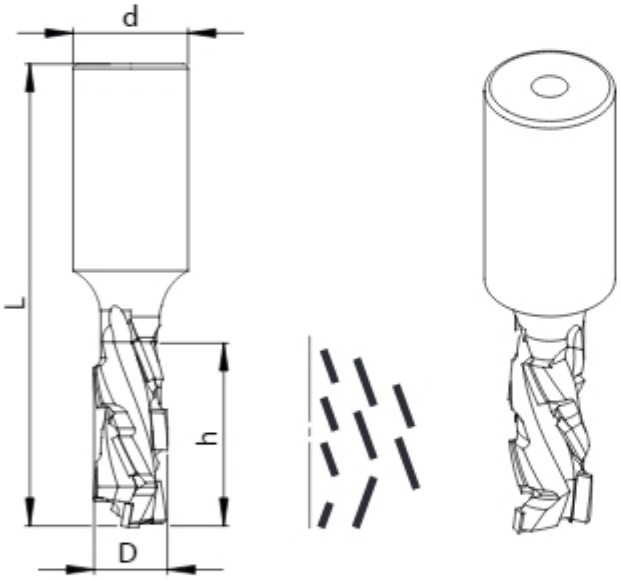



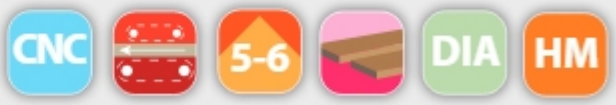

Catalogue number	Type	D mm	h mm	d mm	L mm	z		
TDT07.008A	TDT-07	16	30	25	105	3+3	R	+
TDT07.008AL	TDT-07	16	30	25	105	3+3	L	+
TDT07.005	TDT-07	18	30	25	105	3+3	R	+
TDT007.005L	TDT-07	18	30	25	105	3+3	L	+
TDT07.002	TDT-07	18	40	25	110,5	3+3	R	+
TDT07.002L	TDT-07	18	40	25	110,5	3+3	L	+
TDT07.0031	TDT-07	20	40	25	110,5	3+3	R	+
TDT07.0031L	TDT-07	20	40	25	110,5	3+3	L	+
TDT007.0070	TDT-07	20	48	25	118,5	3+3	R	+
TDT007.0070L	TDT-07	20	48	25	118,5	3+3	L	+

TDT-09

Highly efficient turbo shank cutter type **TDT-09** for formatting, splitting, grooving and copying on CNC routers.

Type of work: formatting, splitting, grooving, copying.

Material: chipboard, MDF, laminates.

Specification:

- big helix line angle guaranteeing high cutting quality and life of the tool,
- gentle chip flow,
- PCD drilling blade,
- P_{max} = 14 m/min,
- N_{max}=24 000 r.p.m.

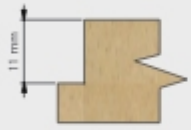

Minimum rebate size of laminated material.

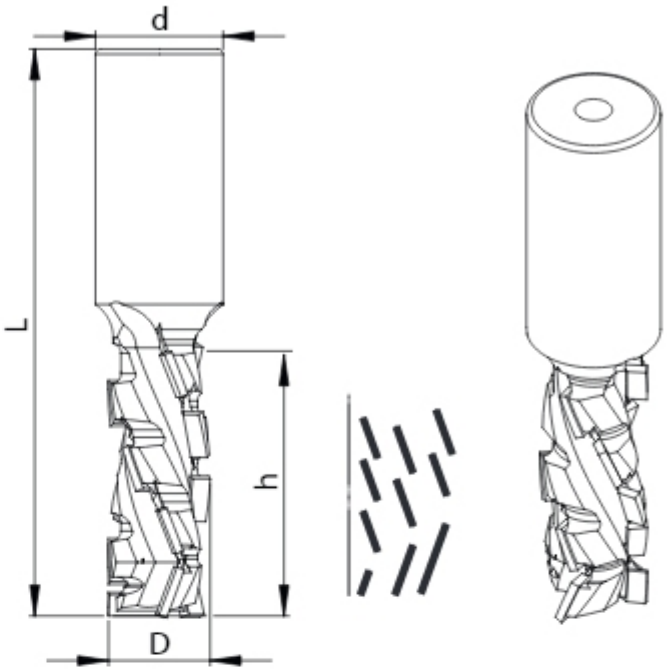





Catalogue number	Type	D mm	h mm	d mm	L mm	z		
TDT09.0050	TDT-09	18	25	20	84,5	3+3	R	•
TDT09.0050L	TDT-09	18	25	20	84,5	3+3	L	+
TDT09.0010	TDT-09	18	30	20	93	3+3	R	+
TDT09.0010L	TDT-09	18	30	20	93	3+3	L	+
TDT09.0130	TDT-09	18	35	20	98	3+3	R	+
TDT09.0130L	TDT-09	18	35	20	98	3+3	L	+
TDT09.0140	TDT-09	18	43	20	101	3+3	R	•
TDT09.0140L	TDT-09	18	43	20	101	3+3	L	+
TDT09.0090	TDT-09	18	52	20	115	3+3	R	+
TDT09.0090L	TDT-09	18	52	20	115	3+3	L	+
TDT09.0030	TDT-09	20	25	20	84,5	3+3	R	+
TDT09.0030L	TDT-09	20	25	20	84,5	3+3	L	+
TDT09.0040	TDT-09	20	30	20	93	3+3	R	+
TDT09.0040L	TDT-09	20	30	20	93	3+3	L	+
TDT09.0060	TDT-09	20	35	20	98	3+3	R	+
TDT09.0060L	TDT-09	20	35	20	98	3+3	L	+
TDT09.0020	TDT-09	20	43	20	101	3+3	R	+
TDT09.0020L	TDT-09	20	43	20	101	3+3	L	+
TDT09.0150	TDT-09	20	52	20	115	3+3	R	+
TDT09.0150L	TDT-09	20	52	20	115	3+3	L	+

TDT-15

Turbo shank cutter type **TDT-15** designed for formatting and splitting on CNC routers with vacuum bed.

Type of work: formatting, splitting.

Material: chipboard, MDF, HDF.

Specification:

- used in highly efficient machining of raw material,
- chip flow up,
- D = 12, D= 16 resharpable 2-3 times,
- D = 20 resharpable 4-6 times,
- P_{max} = 10-18 m/min,
- n_{max}=24 000 r.p.m.

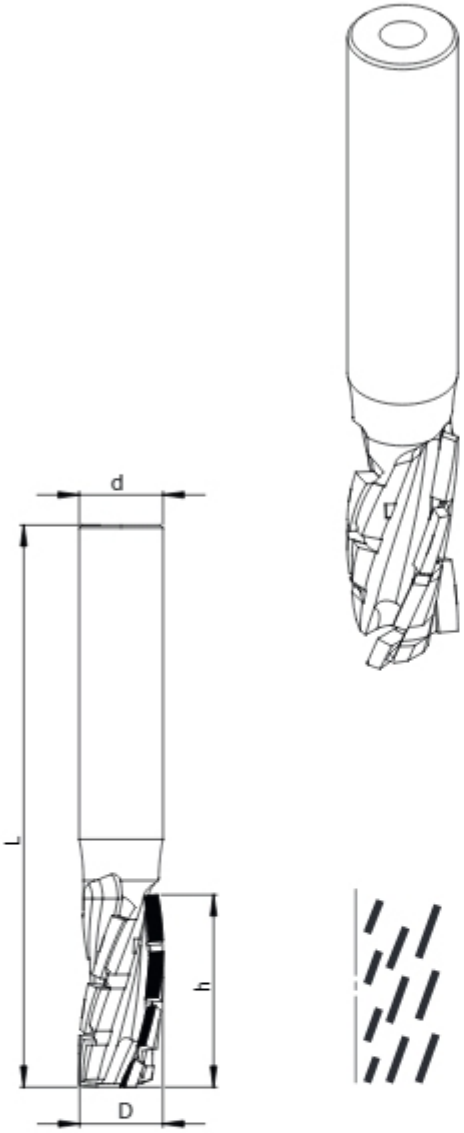



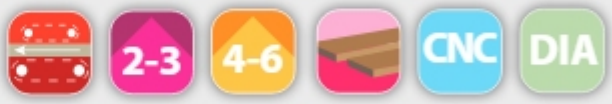

Catalogue number	Type	D mm	h mm	d mm	L mm	z		
TDT015.0020	TDT-15	12	25	12	75	3	R	+
TDT015.0040	TDT-15	16	25	16	75	3	R	+
TDT015.0070	TDT-15	20	40	25	106	3	R	+
TDT015.0021	TDT-15	12	25	25	106	3	R	+
TDT015.0110	TDT-15	12	35	12	88	3	R	+
TDT015.0120	TDT-15	16	25	16	106	3	R	+
TDT015.0130	TDT-15	16	35	16	106	3	R	+
TDT015.0140	TDT-15	16	43	16	106	3	R	+
TDT015.0150	TDT-15	20	25	25	106	3	R	+
TDT015.0160	TDT-15	20	35	25	106	3	R	+
TDT015.0170	TDT-15	20	43	20	106	3	R	+
TDT015.0180	TDT-15	20	60	25	106	3	R	+

TDT-0151

Turbo shank cutter type **TDT-0151** designed for formatting and splitting on CNC routers with vacuum bed.

Type of work: formatting, splitting.

Material: chipboard, MDF, HDF.

Specification:

- used in highly efficient machining of laminated material material: HDF, MDF, chipboard,
- very high cutting quality on bottom and top edge of the machined material thanks to alternative cutting angles,
- D = 12, D = 16 resharpable 3-4 times,
- D = 20 resharpable 4-6 times,
- P_{max} = 10-15 m/min,
- n_{max} = 24 000 r.p.m.



Minimum rebate size of laminated material.



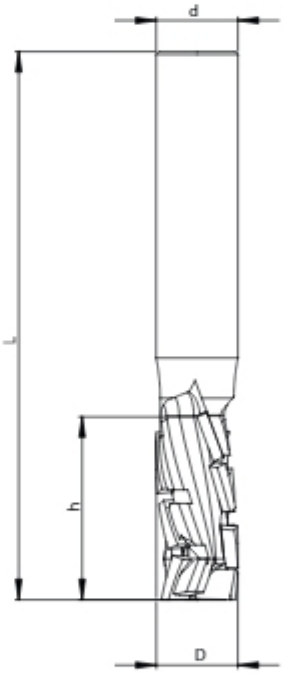



3 cutting lines on 3 spirals

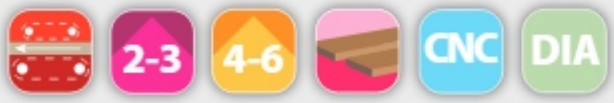



Catalogue number	Type	D mm	h mm	d mm	L mm	z		
TDT0151.5010	TDT-0151	12	25	12	80	3	R	•
TDT0151.5020	TDT-0151	12	35	12	90	3	R	+
TDT0151.5030	TDT-0151	16	25	16	80	3	R	+
TDT0151.5040	TDT-0151	16	35	16	95	3	R	•
TDT0151.5050	TDT-0151	16	43	16	100	3	R	+
TDT0151.5060	TDT-0151	20	25	20	80	3	R	+
TDT0151.5070	TDT-0151	20	35	20	90	3	R	+
TDT0151.5080	TDT-0151	20	43	20	100	3	R	+

TDT-0153

Turbo shank cutter type **TDT-0153** designed for formatting and splitting on CNC routers



PCD shank cutter from the TDT-TURBO group, resharpenable 3-4 times, with plunge tip and heavy duty body from special wolfram steel.

W wolfram steel body

TDT-0153 cutter strengthened body and design allows for a very quiet and stable work with feed speed up to 20 m/min with high cutting quality and increased life..

Type of work: formatting, splitting.

Material: chipboard, MDF, HDF, laminates.

Specification:

- used in highly efficient machining of laminated material material: HDF, MDF, chipboard, laminates,
- very high cutting quality on bottom and top edge of the machined material thanks to alternative cutting angles,
- resharpable 3-4 times,
- P_{max} = 15-20 m/min,
- n_{max} = 24 000 r.p.m.





3 full cutting lines on 6 spirals

New dimension of Nesting

MDF HDF 3-4 CNC DIA

Catalogue number	Type	D mm	h mm	d mm	L mm	z		
TDT0153.0013 W	TDT-0153	12	24	12	70	3+1	R	•
TDT0153.0160 W	TDT-0153	16	35	16	95	3+1	R	+

TDT-10

Highly efficient turbo shank cutter z=4+4 type **TDT-10** designed for formatting, splitting, grooving and copying on CNC routers.

Type of work: formatting, splitting, grooving, copying.

Material: solid hardwood, exotic hardwood, chipboard, MDF, HDF, raw boards, melamine and paper, HPL, veneer, materials coated with finish foil.

Innovative construction of shank tools with increased density of cutting blades positioned spirally at a big angle. The cutters are designed for very efficient work with the highest quality of the machined material. Four simultaneously cutting blades are positioned at a very big shear angle. It guarantees very long life as well as quiet and stable work of the tool. Spirally arranged 4 cutting lines perfectly remove chip leaving the machined elements clean.

Specification:

- D = 20 resharpable 5-6 times,
- D = 22, D = 25 resharpable 7-9 times,
- two PCD drilling blades,
- P_{max} = 20-25 m/min,
- n_{max}=24 000 r.p.m.



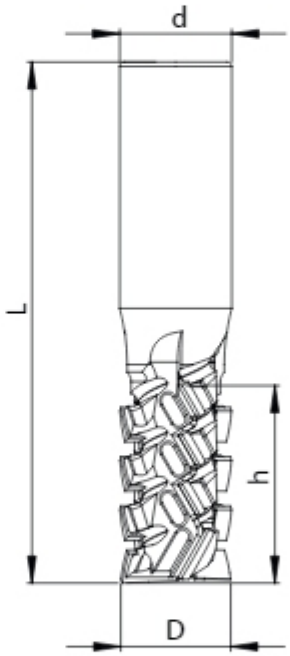



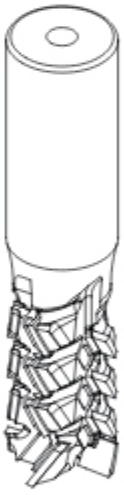



Minimum rebate size of laminated material.







Catalogue number	Type	D mm	h mm	d mm	L mm	z		
TDT010.0040	TDT-10	20	25	20	87	4+4	R	+
TDT010.0040L	TDT-10	20	25	20	87	4+4	L	+
TDT010.0050	TDT-10	20	35	20	97	4+4	R	•
TDT010.0050L	TDT-10	20	35	20	97	4+4	L	+
TDT010.0030	TDT-10	22	43	16	105	4+4	R	•
TDT010.0030L	TDT-10	22	43	16	105	4+4	L	+
TDT010.0020	TDT-10	25	43	25	116	4+4	R	•
TDT010.0020L	TDT-10	25	43	25	116	4+4	L	+

TPD-05 R or L

Profile shank cutter type **TPD-05** right or left designed for profiling on CNC machines.

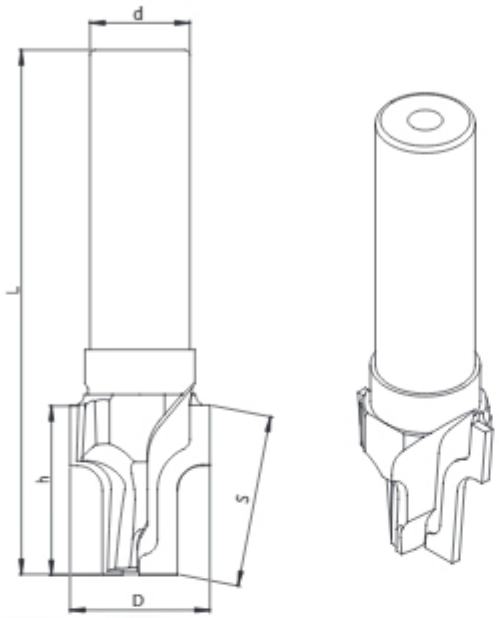

Type of work: profiling.

Material: chipboard, plywood, MDF.

Specification:

- P_{max} = 8-12 m/min,
- N_{max}=18 000 r.p.m.

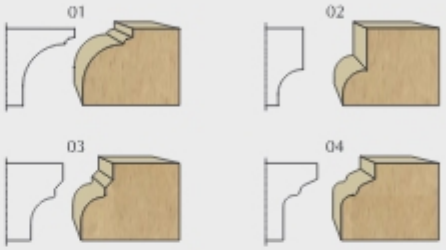

Example profiles.

Type	D mm	h mm	d mm	L mm	s mm	z	n_{max}	
TPD-05	26	28	20	68	29,2	2	18000	+

TPD-07 R or L

Profile shank cutter type **TPD-07** right or left designed for profiling on CNC machines.

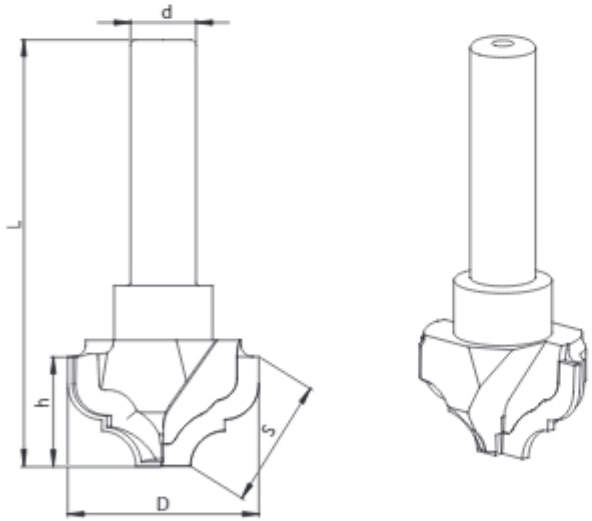

Type of work: profiling.

Material: chipboard, plywood, MDF.

Specification:

- P_{max} = 8-12 m/min,
- N_{max}=18 000 r.p.m.

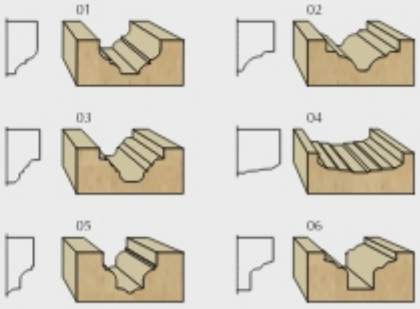

Example profiles.

Type	D mm	h mm	d mm	L mm	s mm	z	n_{max}	
TPD-07	34	24	12	55	25,8	2	18000	+

TPD-08 R or L

Profile shank cutter type **TPD-08** right or left designed for profiling on CNC machines.

Type of work: profiling.

Material: chipboard, plywood, MDF.

Specification:

- profile shank cutters are designed for very precise machining,
- tools are equipped with additional blades directing chip down,
- P_{max} = 8-12 m/min,
- N_{max}=24 000 r.p.m.

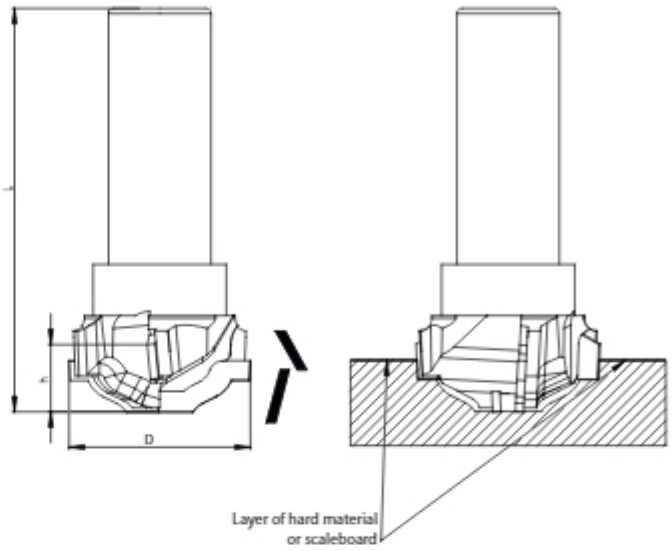

Type	D mm	h mm	d mm	L mm	z	n_{max}	
TPD-08	35,4	12	20	78	2+2	18000	+

TPD-10 R or L

Profile shank cutter type **TPD-10** right or left designed for profiling on CNC machines.

Type of work: profiling.

Material: chipboard, plywood, MDF.

Specification:

- P_{max} = 8-12 m/min,
- N_{max}=18 000 r.p.m.

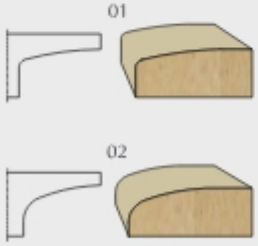

Example profiles.

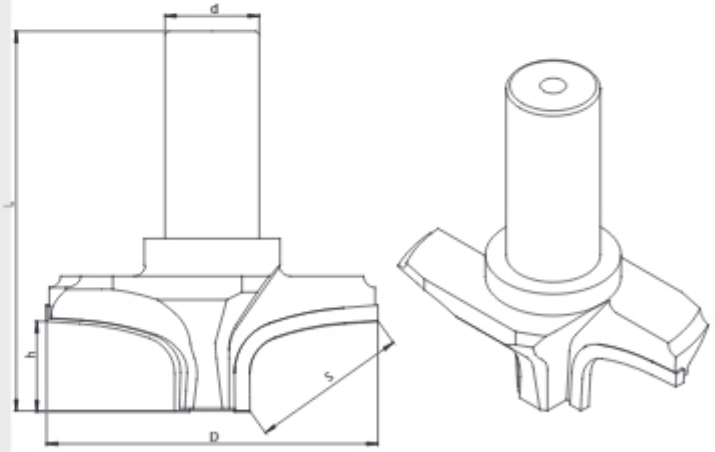

Type	D mm	h mm	d mm	L mm	s mm	z	n_{max}	
TPD-10	81	21	16	75	37	2	18000	+

TPD-13 R or L

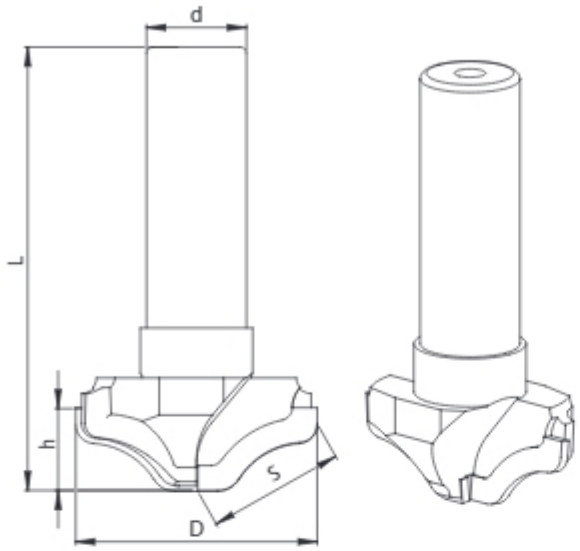

Profile shank cutter type **TPD-13** right or left designed for profiling on CNC machines.

Type of work: profiling.

Material: chipboard, plywood, MDF.

Specification:

- P_{max} = 8-12 m/min,
- N_{max}=24 000 r.p.m.

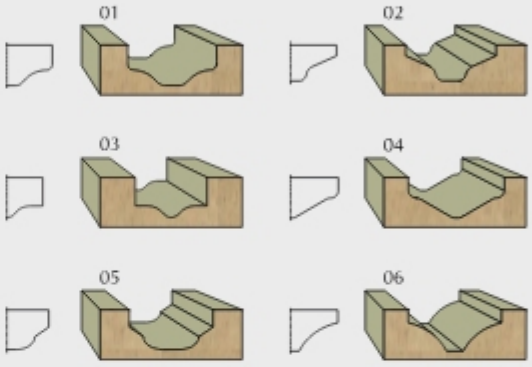

Example profiles.





Type	D mm	h mm	d mm	L mm	s mm	z	n_{max}	
TPD-13	36	12	25	53,6	21,6	2	18000	+

TPD-18

Profile shank cutter type **TPD-18** designed for T-grooving.

Type of work: profiling.

Material: chipboard, plywood, MDF.

Specification:

- highly efficient machining quality thank to properly selected construction and PKD type,
- tools offered also in special versions (on request),
- sharpening zone 2 mm,
- P_{max} = 3-5 m/min.
- N_{max}=24 000 r.p.m.

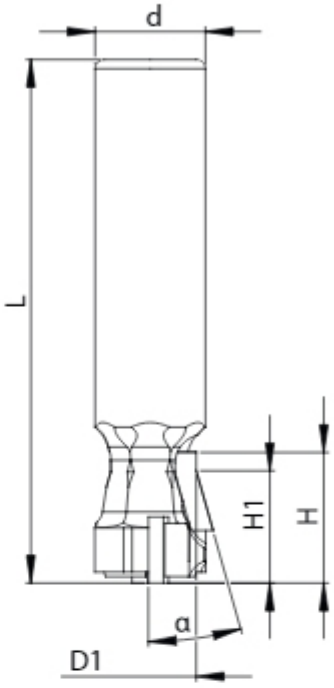

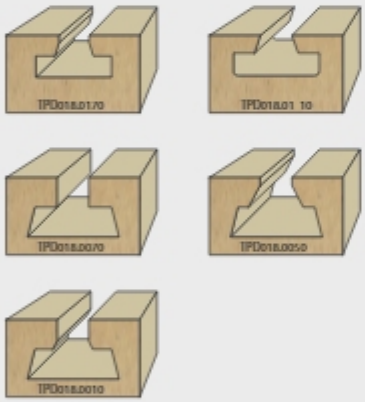

Example profiles.

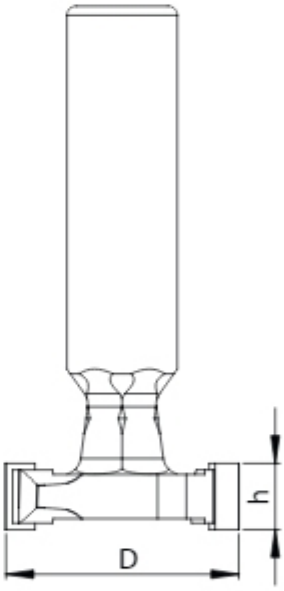

Catalogue number	Type	D mm	h mm	d mm	D_1 mm	L mm	H mm	H_1 mm	α	z		
TPD018.0170	TPD-18	25,40	7,20	12	10,50	60	14,20	12,20	15,6°	2+1	R	+
TPD018.0110	TPD-18	27,40	7,60	16	10,50	63	13,50	7,60	20°	2+1	R	+
TPD018.0070	TPD-18	34,30	10,50	12	29,60	60	20,50			2+1	R	+
TPD018.0050	TPD-18	36,00	7,00	10	32,25	60	14,00	11,00	45°	2+1	R	+
TPD018.0010	TPD-18	37,75	9,15	25	27,85	90	17,80	12,35	20°	2+1	R	+

TPD-20 R or L

Profile shank cutter type **TPD-20** designed for profiling on CNC machines.

Type of work: profiling.

Material: chipboard, plywood, MDF.

Specification:
- P_{max} = 8-12 m/min,
- N_{max}=24 000 r.p.m.

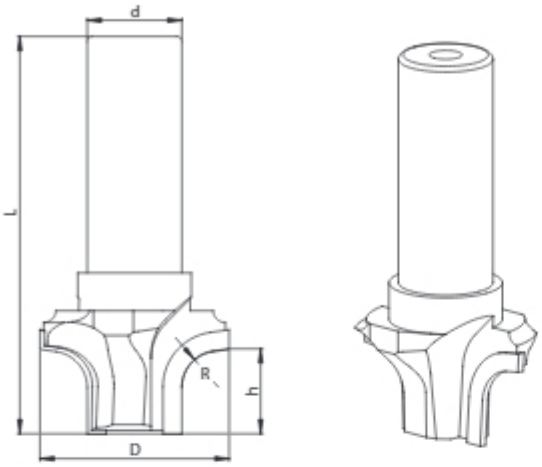

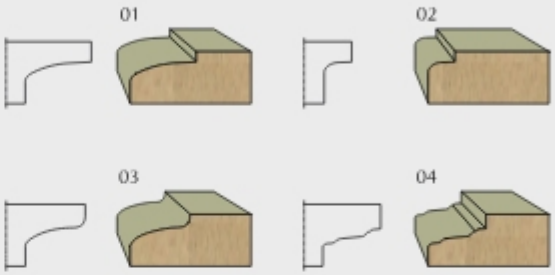

Example profiles.

Type	D mm	h mm	d mm	L mm	R mm	z	n_{max}	
TPD-20	42	22	20	75	8	2	18000	+

TPD-30 R or L

Profile shank cutter type **TPD-30** designed for profiling on CNC machines.

Type of work: profiling.

Material: chipboard, plywood, MDF.

Specification:
- P_{max} = 8-12 m/min,
- N_{max} = 24 000 r.p.m.

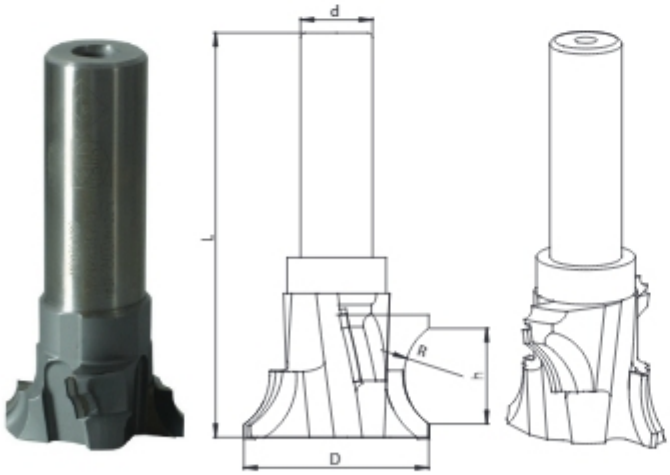

Type	D mm	h mm	d mm	L mm	R mm	z	n_{max}	
TPD-30	52	40	25	105	26	4	18000	+

FD-01

Straight brazed cutter type **FD-01**.

Type of work: formatting.

Material: chipboard, plywood, MDF, HDF.

Specification:

- P_{max} = 20-30 m/min,
- N_{max} = 9 000 r.p.m.



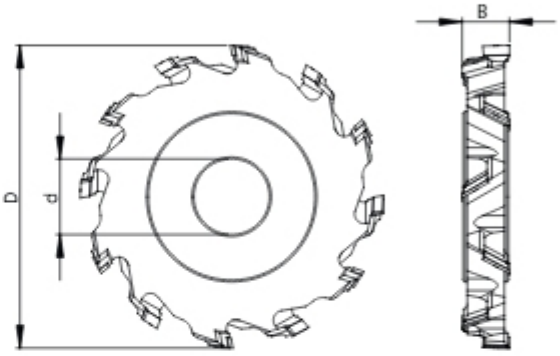

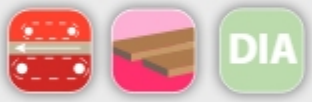



Catalogue number	Type	D mm	B mm	d mm	z	n_{max}	
FD01.012	FD-01	50	20	16	4+4	9000	+
FD01.005	FD-01	70	10	20	3+3	9000	+
FD01.0020	FD-01	100	22	25	3+3	9000	+
FD01.030	FD-01	125	8	40	4+4	9000	+
FD01.009	FD-01	125	12	30	6+6	9000	+
FD01.022	FD-01	125	15	30	4+4	9000	+
FD001.0260	FD-01	125	20	30	4+4	9000	+
FD001.0270	FD-01	125	25	30	4+4	9000	+
FD01.011	FD-01	125	28	30	4+4	9000	+
FD01.014	FD-01	125	30	30	4+4	9000	+
FD01.018	FD-01	125	45	30	4+4	9000	+
FD01.002	FD-01	160	15	30	4+4	9000	+
FD01.0026	FD-01	160	15	30	6+6	9000	+
FD001.0230	FD-01	160	17	40	8+8	9000	+
FD001.0280	FD-01	160	20	30	4+4	9000	+
FD001.0290	FD-01	160	25	30	4+4	9000	+
FD001.0100	FD-01	180	10,5	40	8+8	9000	+
FD001.0130	FD-01	180	16	30	4+4	9000	+
FD01.008	FD-01	200	25	30	6+6	9000	+

FDKA



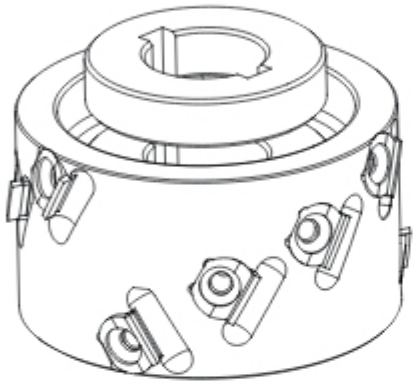

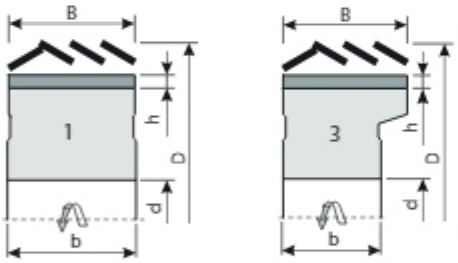

Cutter head **FDKA** with aluminum body and exchangeable inserts. Multi-use aluminum body and exchangeable blades give significantly lower maintenance costs after a couple of life cycles.
Aluminum body results in tool weight lower by 60%. It significantly reduces spindle work load compared to steel body tools. Lower tool weight means also noise reduction and stablemachine work.

Type of work: formatting.

Material: veneered chipboard covered with laminate, foil or paper.

Specification:
- P_{max} = 20-25 m/min,
- N_{max} = 16 500 r.p.m.

DIA AL

Cat. number	Type	D mm	B mm	b mm	d mm	z	Nr	n_{max}		
FDKA.0010	FDKA	100	44	40,6	30	3+3	3	16 500	R	•
FDKA.0010L	FDKA	100	44	40,6	30	3+3	3	16 500	L	•
FDKA.0030	FDKA	125	64	40,6	30	3+3	3	12 500	R	•
FDKA.0030L	FDKA	125	64	40,6	30	3+3	3	12 500	L	•

Spare parts for cutter heads FDKA

Cat. nr	Name	Dimensions		
PD.FDKA.0010 PD.FDKA.0030	Spacer ring	60 x 13 x 30,1 60 x 34 x 30,1		+
P.FDKA	Insert (not sharpened)	16 x 4		•

Cat. nr	Name	Dimensions		
WHAS00006	Screw TOR 1128	M6x10		•

Additional ring makes cutter more universal.
Option Nr. 1 b=53,6mm with additional ring PD.FDKA.0010 or PD.FDKA.0030.

FD-002

Straight brazed cutter type **FD-002**, designed for surface formatting on edge banders and formatting machines with mechanical feed. Helically arranged blades, positioned at a big angle guarantee very efficient and high quality machining.

Type of work: formatting.

Material: veneered chipboard covered with laminate, foil or paper.

Specification:

- sharpening zone for DIA = 3 mm is 2 mm,
- sharpening zone for DIA = 5 mm is 4 mm,
- big shear angle guarantees high machining quality,
- P_{max} = 20-26 m/min,
- n_{max} = 15 000 rpm.





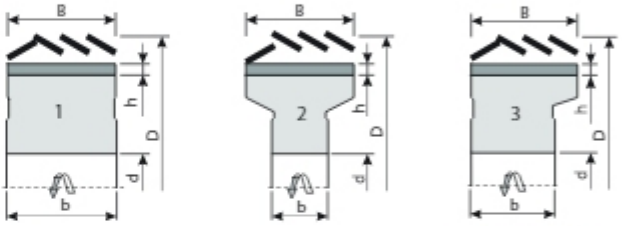

DIA

Machine	Type	D mm	B mm	b mm	d mm	z	Keyway mm	Nr	DIA h=3mm	DIA h=5mm
IMA/Brandt	FD-002	100	34	37,6	30	3+3	3x8	1	+	+
IMA/Brandt	FD-002	100	43	40,6	30	3+3	3x8	3	+	+
	FD-002	100	43	45	30	3+3	3x8	1	+	+
IMA/Brandt	FD-002	100	48	40,6	30	3+3	3x8	3	+	+
HolzHer	FD-002	100	48	25	30	3+3	3x8	2	+	+
	FD-002	100	48	50	30	3+3	3x8	1	+	+
HolzHer	FD-002	100	63	25	30	3+3	3x8	2	+	+
Homag	FD-002	125	34	37,6	30	3+3	3x8	1	+	+
Homag	FD-002	125	63	40,6	30	3+3	3x8	2	+	+
IMA	FD-002	125	63	40,6	30	3+3	3x8	3	+	+

Catalogue number	Type	Machine	D mm	B mm	b mm	d mm	z	Nr	DIA h mm		
FD002.606425B.2	FD-002	FELDER	60	64	62	25	2+2	2	3	R	•
FD002.606425B.2L	FD-002	FELDER	60	64	62	25	2+2	2	3	L	•
FD002.1560	FD-002	IMA/Brandt	100	43,5	40,6	30	3+3	3	3	R	•
FD002.1560L	FD-002	IMA/Brandt	100	43,5	40,6	30	3+3	3	3	L	•
FD002.1561	FD-002	IMA/Brandt	100	43,5	40,6	30	3+3	3	5	R	•
FD002.1561L	FD-002	IMA/Brandt	100	43,5	40,6	30	3+3	3	5	L	•
FD002.1600	FD-002	IMA/Brandt	100	48	40,6	30	3+3	3	3	R	•
FD002.1600L	FD-002	IMA/Brandt	100	48	40,6	30	3+3	3	3	L	•
FD002.2100	FD-002	IMA/Brandt	100	63	40,6	30	3+3	3	3	R	•
FD002.2100L	FD-002	IMA/Brandt	100	63	40,6	30	3+3	3	3	L	•

FD-025



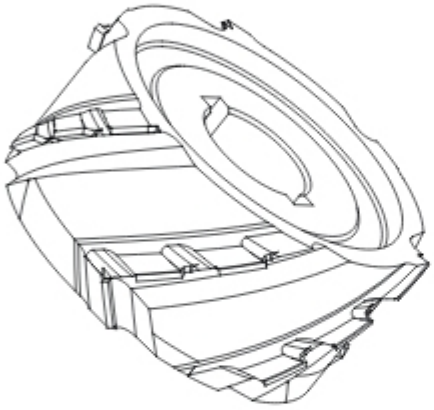

Straight brazed cutter type **FD-025**, designed for surface formatting on edge banders and formatting machines with mechanical feed. Helically arranged blades, positioned at a big angle guarantee very efficient and high quality machining of hard-machinable materials.

Type of work: formatting.

Material: veneered chipboard covered with laminate, foil or paper.

Specification:

- sharpening zone for DIA = 3 mm is 2 mm,
- sharpening zone for DIA = 5 mm is 4 mm,
- **very big shear angle** guarantees high machining quality,
- P_{max} = 22-26 m/min
- N_{max} = 15 000 r.p.m.

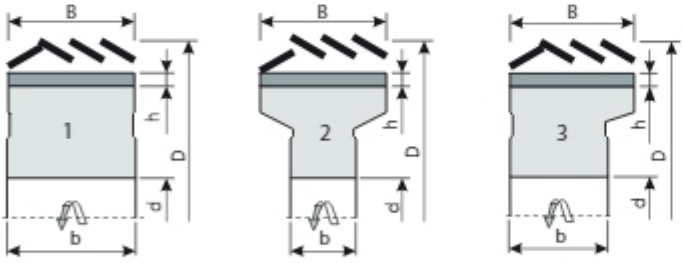

Machine	Type	D mm	B mm	b mm	d mm	z	Keyway mm	Nr	DIA h=3mm	DIA h=5mm
IMA/Brandt	FD-025	100	34	37,6	30	3+3	3x8	1	+	+
IMA/Brandt	FD-025	100	43	40,6	30	3+3	3x8	3	+	+
IMA/Brandt	FD-025	100	48	40,6	30	3+3	3x8	3	+	+
HolzHer	FD-025	100	48	25	30	3+3	3x8	2	+	+
HolzHer	FD-025	100	63	25	30	3+3	3x8	2	+	+
Homag	FD-025	125	34	37,6	30	3+3	3x8	1	+	+
Homag	FD-025	125	63	40,6	30	3+3	3x8	2	+	+
IMA	FD-025	125	63	40,6	30	3+3	3x8	3	+	+

FD-021

Straight brazed cutter type **FD-021**, designed for surface formatting on edge banders and formatting machines with mechanical feed.

Type of work: formatting.

Material: chipboard, plywood, MDF, HDF.

Specification:

- symmetrically arranged blades,
- P_{max} = 22-26 m/min,
- n_{max} = 15 000 rpm.



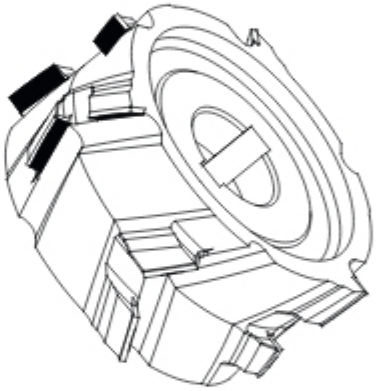

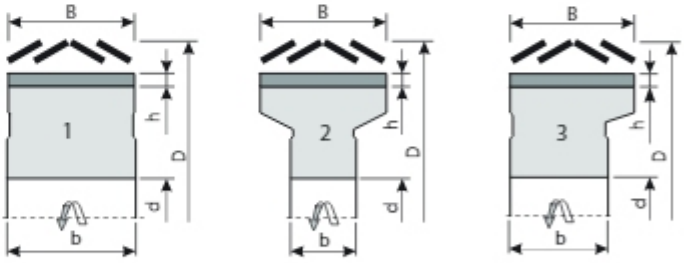

DIA MDF HDF

Machine	Catalogue number	Type	D mm	B mm	b mm	d mm	z	Keyway mm	Nr	
OTT	FD021.0010	FD-021	85	45	45	30	3+3	8x3	1	+
IMA/Brandt	FD021.0020	FD-021	100	34	37,6	30	3+3	8x3	1	+
HolzHer	FD021.0030	FD-021	100	48	25	30	3+3	8x3	2	+
IMA/Brandt	FD021.0041	FD-021	100	43,6	40,6	30	3+3	8x3	2	+
HolzHer	FD021.0051	FD-021	100	52	25	30	3+3	8x3	2	+
Homag	FD021.0060	FD-021	100	34	37,6	30	3+3	8x3	1	+
Homag	FD021.0180	FD-021	125	43	40,6	30	3+3	8x3	1	+
Homag	FD021.0170	FD-021	125	63	40,6	30	3+3	8x3	2	+

FD-03

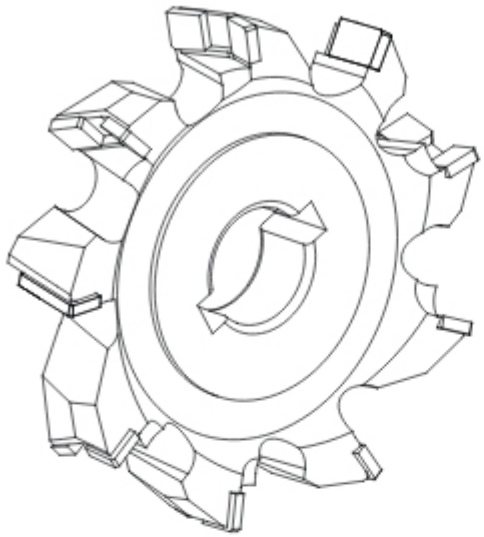

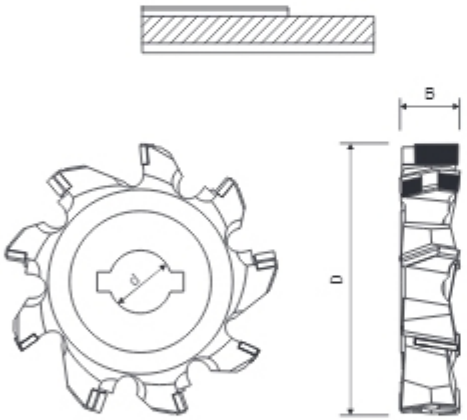

Straight brazed cutter type **FD-03**, designed for pre-cutting, before profiling veneered elements
FD-03 cutter is used when thick layer of the removed mterial does not allow for obtaining high quality edges on edge banders and production lines.

Type of work: pre-cutting.

Material: chipboard, MDF.

Specification:

- P_{max} = 18 m/min,
- N_{max} = 9 000 r.p.m.

11

MDF

DIA

Catalogue number	Type	D mm	B mm	d mm	z	n_{max}	
FD003.0010	FD-03	70	15	16	9+3+3	9000	+
FD003.0020	FD-03	70	25	20	9+3+3	9000	+

ZFD-01

Set of straight brazed cutters type **ZFD-01** designed for formatting machines.

Type of work: formatting.

Material: chipboard, plywood, MDF, HDF.

Specification:
- variable sharpening zone,
- machining materials with various width,
- P_{max} = 35 m/min,
- N_{max} = 9 000 r.p.m.

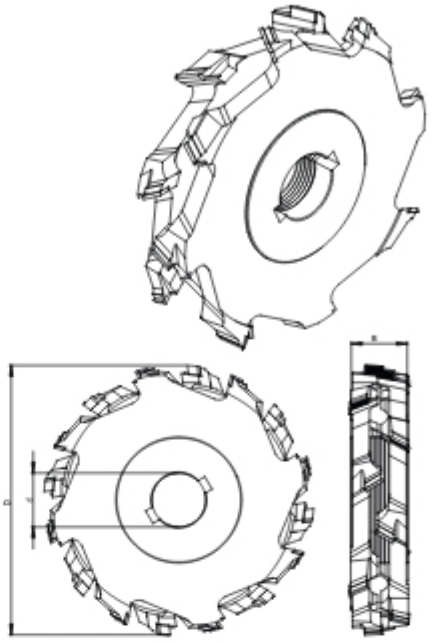

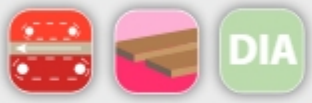



Catalogue number	Type	D mm	B mm	d mm	z	n_{max}	
ZFD001.0060	ZFD-01	120	24÷36	30	6+6	9000	+
ZFD01.001	ZFD-01	125	24÷36	30	6+6	9000	+
ZFD001.0040	ZFD-01	125	24÷45	30	6+6	9000	+
ZFD01.003	ZFD-01	140	34÷60	30	6+6	9000	+
ZFD001.0070	ZFD-01	160	24÷36	30	6+6	9000	+

ZFD-02

Set of straight brazed cutters type **ZFD-02** designed for formatting machines.

Type of work: formatting.

Material: chipboard, plywood, MDF, HDF.

Specification:
- variable sharpening zone,
- machining materials with various width,
- P_{max} = 20-25 m/min.
- N_{max} = 9 000 r.p.m.

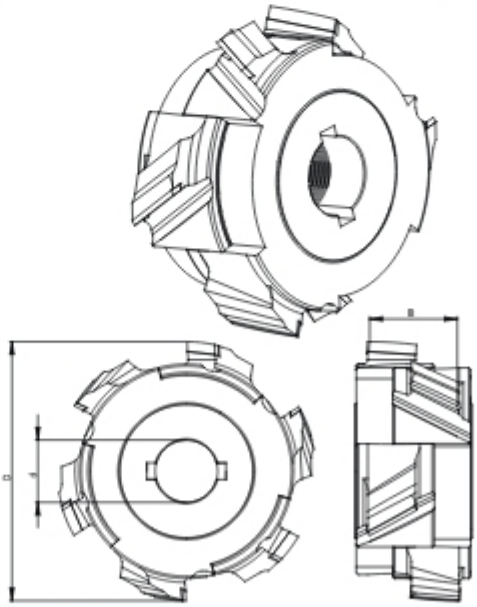





Catalogue number	Type	D mm	B mm	d mm	z	n_{max}	
ZFD02.020	ZFD-02	120	24÷36	30	3+3	9000	+
ZFD02.021	ZFD-02	125	24÷36	30	3+3	9000	+
ZFD02.022	ZFD-02	125	24÷45	30	3+3	9000	+

ZFD-002

Set of straight brazed cutters type **ZFD-01** designed for formatting machines.

Type of work: formatting.

Material: chipboard, plywood, MDF, HDF.

Specification:

- optionally offered with anti-kickback system and blade protection against removed material,
- machining materials with various width possible thanks to axial regulation of working part width,
- very long life of tools thanks to variable cutting points zone,
- P_{max} = 30 m/min.
- N_{max} = 6 000 r.p.m.

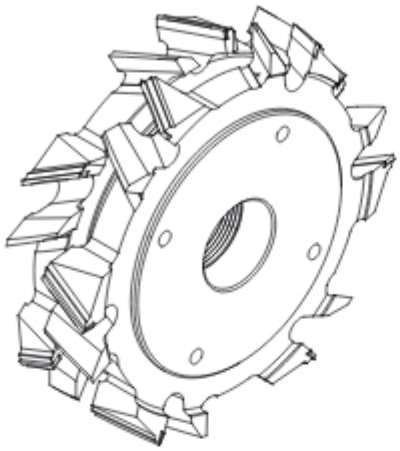

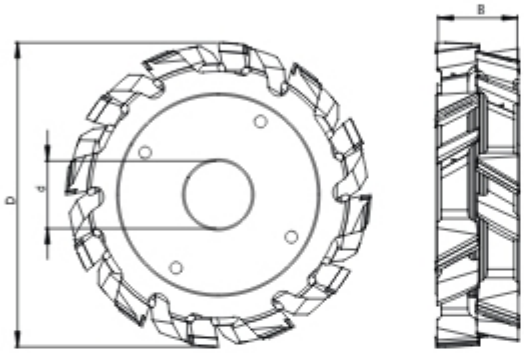

MDF HDF DIA

Catalogue number	Type	D mm	B mm	d mm	z	n_{max}	
ZFD002.2010	ZFD-002	180	22÷32	30	4+4	6000	+
ZFD002.2020	ZFD-002	180	24÷36	30	4+4	6000	+
ZFD002.2030	ZFD-002	180	34÷42	30	4+4	6000	+
ZFD002.2040	ZFD-002	180	22÷32	40	4+4	6000	+
ZFD002.2050	ZFD-002	180	24÷36	40	4+4	6000	+
ZFD002.2060	ZFD-002	180	34÷42	40	4+4	6000	+

FPD-102 R or L

Profile brazed cutters type **FPD-102** right or left designed for profiling machines.

Type of work: profiling.

Material: chipboard, plywood, MDF.

Specification:
- P_{max} = 25 m/min,
- N_{max} = 9 000 r.p.m.

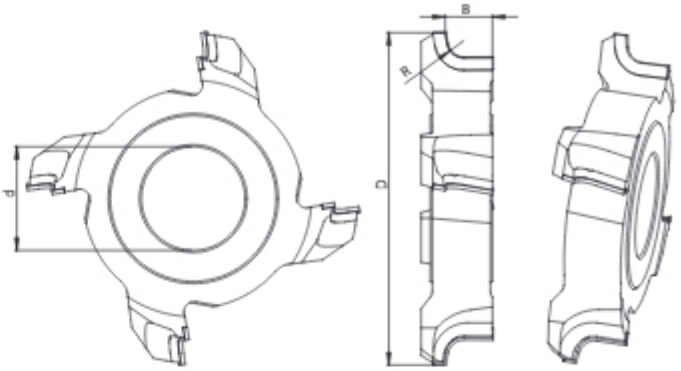





Catalogue number	Type	D mm	B mm	R mm	d mm	z	n_{max}	
FPD102.0020L	FPD-102	160	30	10	35	4	9000	+
FPD102.0030L	FPD-102	160	30	12	35	4	9000	+
FPD102.0040L	FPD-102	160	30	14	35	4	9000	+
FPD102.0050L	FPD-102	160	30	16	35	4	9000	+

FPD-116

Profile brazed cutters type **FPD-116** right or left designed for profiling machines.

Type of work: profiling.

Material: chipboard, plywood, MDF.

Specification:
- P_{max} = 18-25 m/min,
- N_{max} = 9 000 r.p.m.

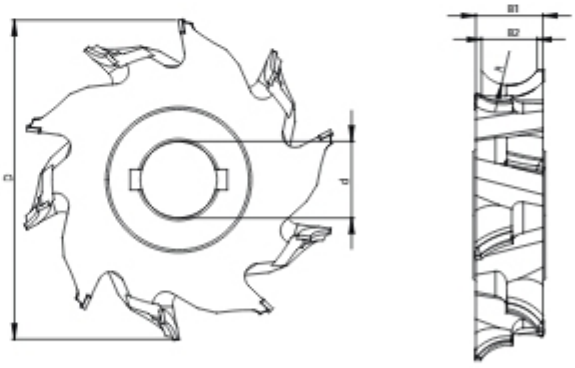





Catalogue number	Type	D mm	B_1 mm	B_2 mm	R mm	d mm	z	n_{max}	
FPD116.0020	FPD-116	100	30	26	18	30	4+4	9000	+
FPD116.0090	FPD-116	125	56	40	20	30	3+3	9000	+
FPD116.0010	FPD-116	160	18	17	9	35	6+6	9000	+
FPD116.0500	FPD-116	180	30	24	16	35	4+4	9000	+
FPD116.0510	FPD-116	180	48	40	25	35	4+4	9000	+
FPD116.0520	FPD-116	180	64	56	35	35	4+4	9000	+

Set of profile brazed cutters

FPD-300

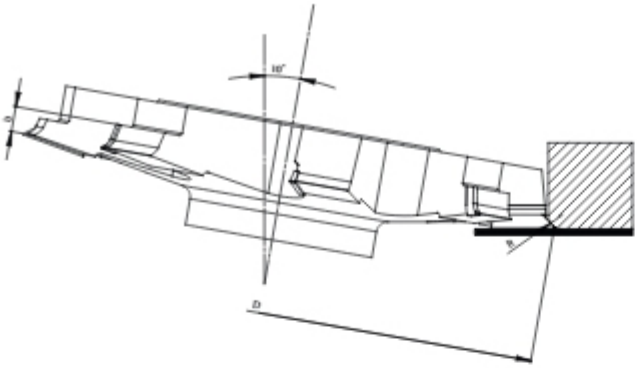

Profile brazed cutters **FPD-300** with PCD blades.

Type of work: postforming.

Material: chipboard, plywood, MDF.

Specification:
- for Homag and IMA machines,
- P_{max} = 25 m/min,
- N_{max} = 9 000 r.p.m.

Catalogue number	Type	D mm	R mm	d mm	z	
FPD300.3010	FPD-300	180	3	35	4+4	+
FPD300.3020	FPD-300	180	4	35	4+4	+
FPD300.3030	FPD-300	180	5	35	4+4	+
FPD300.3040	FPD-300	180		35	4+4	+
FPD300.3050	FPD-300	200		35	4+4	+

FD-500

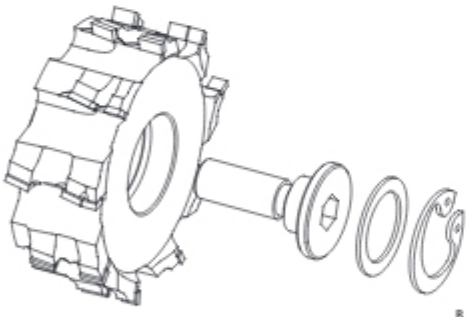

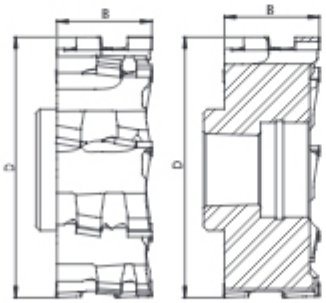

Profile brazed cutters **FD-500** designed for edge beveling.

Type of work: edge machining.

Material: solid hardwood, veneered board, plastics.

Specification:
- for Homag and IMA machines,
- safety ring HSK25R guarantees minimum radial runout and precise balancing of the tools for optimal cutting quality,
- blade with shear angle,
- N_{max} = 18 000 r.p.m.

Catalogue number	Type	D mm	B mm	d mm	z	n_{max}	
FD500.0130	FD-500	70	20	HSK25	9+3+3	18000	+
FD500.0101	FD-500	70	50	HSK25	9+3+3+3	18000	+
FD500.0101L	FD-500	70	50	HSK25	9+3+3+3	18000	+
FD500.0110P	FD-500	75	22	20	12+4	18000	+
FD500.0110	FD-500	75	22	20	12+4	18000	+
FD500.0140L	FD-500	75	25	HSK25	12+4	18000	+

FPD-501

Profile brazed cutters **FPD-501** designed for edge milling

Type of work: edge rounding
Material: solid hardwood, veneered board, edging from plastics

Specification:

- for Homag machines
- safety ring HSK32 guarantees minimum radial runout and precise balancing of the tools for optimal cutting quality
- blade with shear angle
- N_{max} = 18 000 r.p.m.

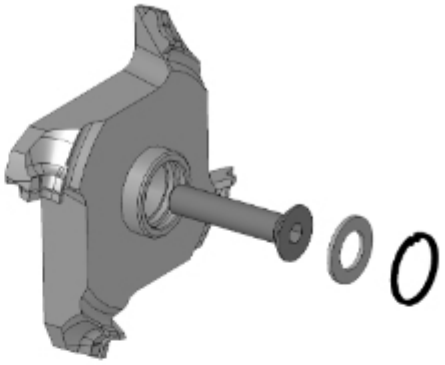

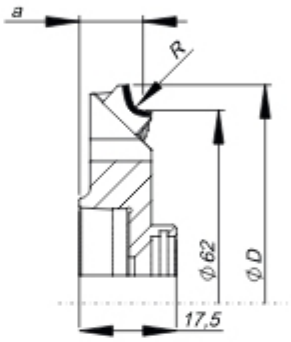

Catalogue number	D mm	R mm	a mm	d mm	z	n_{max}		
FPD501.0010.4	68,1	1,0	11,5	HSK32	4	18000	R	+
FPD501.0010.4L	68,1	1,0	11,5	HSK32	4	18000	L	+
FPD501.0015.4	68,1	1,5	11,5	HSK32	4	18000	R	+
FPD501.0015.4L	68,1	1,5	11,5	HSK32	4	18000	L	+
FPD501.0020.4	71,2	2,0	11,5	HSK32	4	18000	R	+
FPD501.0020.4L	71,2	2,0	11,5	HSK32	4	18000	L	+
FPD501.0025.4	71,2	2,5	11,5	HSK32	4	18000	R	+
FPD501.0025.4L	71,2	2,5	11,5	HSK32	4	18000	L	+
FPD501.0030.4	71,2	3,0	11,5	HSK32	4	18000	R	+
FPD501.0030.4L	71,2	3,0	11,5	HSK32	4	18000	L	+
FPD501.0010.6	68,1	1,0	11,5	HSK32	6	18000	R	+
FPD501.0010.6L	68,1	1,0	11,5	HSK32	6	18000	L	+
FPD501.0015.6	68,1	1,5	11,5	HSK32	6	18000	R	+
FPD501.0015.6L	68,1	1,5	11,5	HSK32	6	18000	L	+
FPD501.0020.6	71,2	2,0	11,5	HSK32	6	18000	R	+
FPD501.0020.6L	71,2	2,0	11,5	HSK32	6	18000	L	+
FPD501.0025.6	71,2	2,5	11,5	HSK32	6	18000	R	+
FPD501.0025.6L	71,2	2,5	11,5	HSK32	6	18000	L	+
FPD501.0030.6	71,2	3,0	11,5	HSK32	6	18000	R	+
FPD501.0030.6L	71,2	3,0	11,5	HSK32	6	18000	L	+

FPD-502

Profile brazed cutters **FPD-502** designed for edge milling

Type of work: edge rounding
Material: solid hardwood, veneered board, edging from plastics

Specification:

- for Homag machines
- safety ring HSK32 guarantees minimum radial runout and precise balancing of the tools for optimal cutting quality
- blade with shear angle
- optimal chip flow
- N_{max} = 18 000 r.p.m.

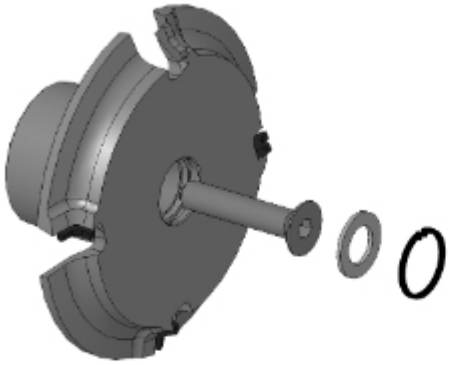

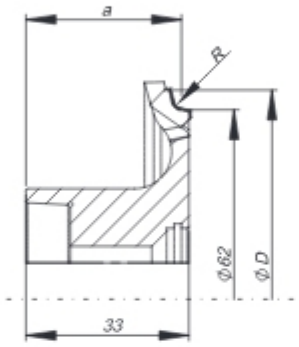

PCV

DIA

Catalogue number	D mm	R mm	a mm	d mm	z	n_{max}		
FPD502.0010.4	74	1,0	31,5	HSK32	4	18000	R	+
FPD502.0010.4L	74	1,0	31,5	HSK32	4	18000	L	+
FPD502.0015.4	74	1,5	31,5	HSK32	4	18000	R	+
FPD502.0015.4L	74	1,5	31,5	HSK32	4	18000	L	+
FPD502.0020.4	74	2,0	31,5	HSK32	4	18000	R	+
FPD502.0020.4L	74	2,0	31,5	HSK32	4	18000	L	+
FPD502.0025.4	74	2,5	31,5	HSK32	4	18000	R	+
FPD502.0025.4L	74	2,5	31,5	HSK32	4	18000	L	+
FPD502.0030.4	74	3,0	31,5	HSK32	4	18000	R	+
FPD502.0030.4L	74	3,0	31,5	HSK32	4	18000	L	+
FPD502.0010.6	74	1,0	31,5	HSK32	6	18000	R	+
FPD502.0010.6L	74	1,0	31,5	HSK32	6	18000	L	+
FPD502.0015.6	74	1,5	31,5	HSK32	6	18000	R	+
FPD502.0015.6L	74	1,5	31,5	HSK32	6	18000	L	+
FPD502.0020.6	74	2,0	31,5	HSK32	6	18000	R	+
FPD502.0020.6L	74	2,0	31,5	HSK32	6	18000	L	+
FPD502.0025.6	74	2,5	31,5	HSK32	6	18000	R	+
FPD502.0025.6L	74	2,5	31,5	HSK32	6	18000	L	+
FPD502.0030.6	74	3,0	31,5	HSK32	6	18000	R	+
FPD502.0030.6L	74	3,0	31,5	HSK32	6	18000	L	+

FPD-503

Profile brazed cutters **FPD-503** designed for edge milling

Type of work: edge rounding
Material: solid hardwood, veneered board, edging from plastics

Specification:

- for Homag, IMA machines
- safety ring HSK25 guarantees minimum radial runout and precise balancing of the tools for optimal cutting quality
- blade with shear angle
- N_{max} = 24 000 r.p.m.

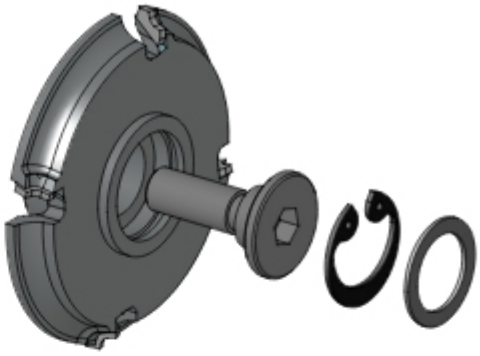

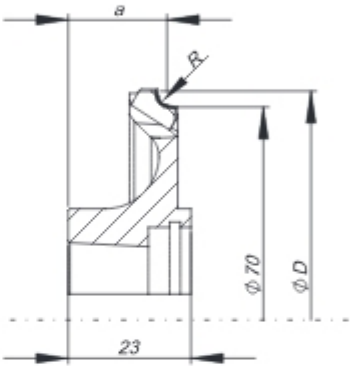

Catalogue number	D mm	R mm	a mm	d mm	z	n_{max}		
FPD503.0010.4	74	1,0	17,5	HSK25	4	24000	R	+
FPD503.0010.4L	74	1,0	17,5	HSK25	4	24000	L	+
FPD503.0015.4	76	1,5	18,0	HSK25	4	24000	R	+
FPD503.0015.4L	76	1,5	18,0	HSK25	4	24000	L	+
FPD503.0020.4	76	2,0	18,5	HSK25	4	24000	R	+
FPD503.0020.4L	76	2,0	18,5	HSK25	4	24000	L	+
FPD503.0025.4	78	2,5	19,0	HSK25	4	24000	R	+
FPD503.0025.4L	78	2,5	19,0	HSK25	4	24000	L	+
FPD503.0030.4	78	3,0	19,5	HSK25	4	24000	R	+
FPD503.0030.4L	78	3,0	19,5	HSK25	4	24000	L	+
FPD503.0010.6	74	1,0	17,5	HSK25	6	24000	R	+
FPD503.0010.6L	74	1,0	17,5	HSK25	6	24000	L	+
FPD503.0015.6	76	1,5	18,0	HSK25	6	24000	R	+
FPD503.0015.6L	76	1,5	18,0	HSK25	6	24000	L	+
FPD503.0020.6	76	2,0	18,5	HSK25	6	24000	R	+
FPD503.0020.6L	76	2,0	18,5	HSK25	6	24000	L	+
FPD503.0025.6	78	2,5	19,0	HSK25	6	24000	R	+
FPD503.0025.6L	78	2,5	19,0	HSK25	6	24000	L	+
FPD503.0030.6	78	3,0	19,5	HSK25	6	24000	R	+
FPD503.0030.6L	78	3,0	19,5	HSK25	6	24000	L	+

FPD-504

Profile brazed cutters **FPD-504** designed for edge milling

Type of work: edge rounding
Material: solid hardwood, veneered board, edging from plastics

Specification:

- for Homag, IMA machines
- safety ring HSK25 guarantees minimum radial runout and precise balancing of the tools for optimal cutting quality
- blade with shear angle
- optimal chip flow
- N_{max} = 24 000 r.p.m.

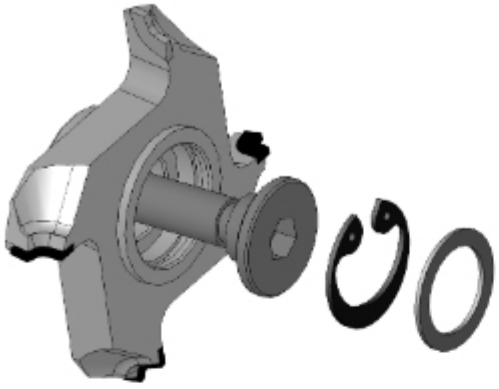

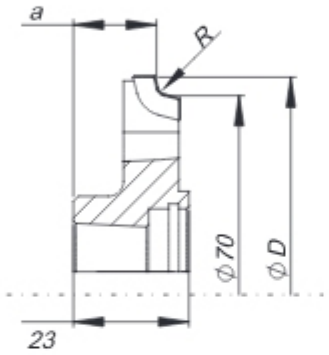

Catalogue number	D mm	R mm	a mm	d mm	z	n_{max}		
FPD504.0010.4	75,1	1,0	16,5	HSK25	4	24000	R	+
FPD504.0010.4L	75,1	1,0	16,5	HSK25	4	24000	L	+
FPD504.0015.4	76,1	1,5	16,5	HSK25	4	24000	R	+
FPD504.0015.4L	76,1	1,5	16,5	HSK25	4	24000	L	+
FPD504.0020.4	77,5	2,0	16,5	HSK25	4	24000	R	+
FPD504.0020.4L	77,5	2,0	16,5	HSK25	4	24000	L	+
FPD504.0025.4	78,1	2,5	16,5	HSK25	4	24000	R	+
FPD504.0025.4L	78,1	2,5	16,5	HSK25	4	24000	L	+
FPD504.0030.4	78,8	3,0	16,5	HSK25	4	24000	R	+
FPD504.0030.4L	78,8	3,0	16,5	HSK25	4	24000	L	+
FPD504.0010.6	75,1	1,0	16,5	HSK25	6	24000	R	+
FPD504.0010.6L	75,1	1,0	16,5	HSK25	6	24000	L	+
FPD504.0015.6	76,1	1,5	16,5	HSK25	6	24000	R	+
FPD504.0015.6L	76,1	1,5	16,5	HSK25	6	24000	L	+
FPD504.0020.6	77,5	2,0	16,5	HSK25	6	24000	R	+
FPD504.0020.6L	77,5	2,0	16,5	HSK25	6	24000	L	+
FPD504.0025.6	78,1	2,5	16,5	HSK25	6	24000	R	+
FPD504.0025.6L	78,1	2,5	16,5	HSK25	6	24000	L	+
FPD504.0030.6	78,8	3,0	16,5	HSK25	6	24000	R	+
FPD504.0030.6L	78,8	3,0	16,5	HSK25	6	24000	L	+

FD-505

Profile brazed cutters **FD-505** designed for edge milling

Type of work: edging
Material: solid hardwood, veneered board, edging from plastics

Specification:

- for Homag machines
- safety ring HSK32 guarantees minimum radial runout and precise balancing of the tools for optimal cutting quality
- blade with shear angle
- optimal chip flow
- N_{max} = 18 000 r.p.m.

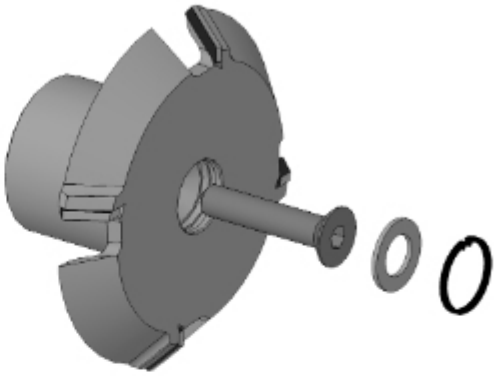

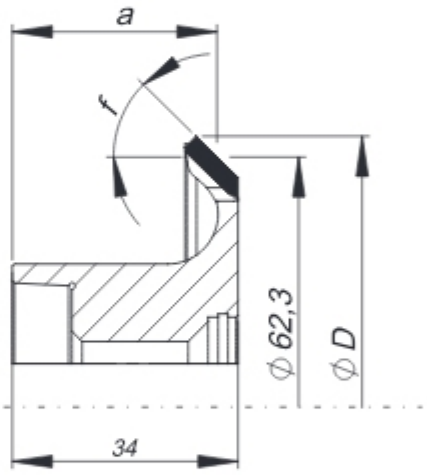

PCV DIA

Catalogue number	D mm	f (chamfer)	a mm	d mm	z	n_{max}		
FD505.0200.4	65,1	20°	31,5	HSK32	4	18000	R	+
FD505.0200.4L	65,1	20°	31,5	HSK32	4	18000	L	+
FD505.0450.4	70	45°	31,5	HSK32	4	18000	R	+
FD505.0450.4L	70	45°	31,5	HSK32	4	18000	L	+
FD505.0200.6	65,1	20°	31,5	HSK32	6	18000	R	+
FD505.0200.6L	65,1	20°	31,5	HSK32	6	18000	L	+
FD505.0450.6	70	45°	31,5	HSK32	6	18000	R	+
FD505.0450.6L	70	45°	31,5	HSK32	6	18000	L	+

FD-506

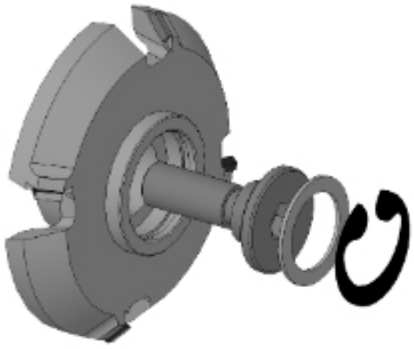

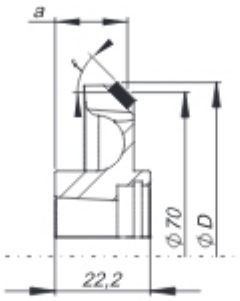

Profile brazed cutters **FD-506** designed for edge milling

Type of work: edging

Material: solid hardwood, veneered board, edging from plastics

Specification:

- for Homag, IMA machines
- safety ring HSK25 guarantees minimum radial runout and precise balancing of the tools for optimal cutting quality
- blade with shear angle
- optimal chip flow
- N_{max} = 24 000 r.p.m.

PCV DIA

Catalogue number	D mm	f (chamfer)	a mm	d mm	z	n_{max}		
FD506.0200.4	73	20°	16,5	HSK25	4	24000	R	+
FD506.0200.4L	73	20°	16,5	HSK25	4	24000	L	+
FD506.0450.4	73	45°	17,5	HSK25	4	24000	R	+
FD506.0450.4L	73	45°	17,5	HSK25	4	24000	L	+
FD506.0200.6	73	20°	16,5	HSK25	6	24000	R	+
FD506.0200.6L	73	20°	16,5	HSK25	6	24000	L	+
FD506.0450.6	73	45°	17,5	HSK25	6	24000	R	+
FD506.0450.6L	73	45°	17,5	HSK25	6	24000	L	+

FPD-550 L



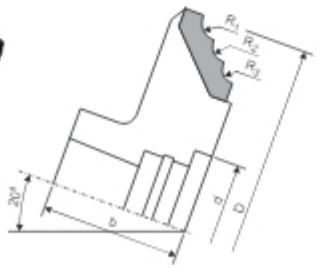

Profile brazed cutters **FPD-550 L** designed for edge beveling.

Type of work: edge machining.

Material: solid hardwood, veneered board, plastics.

Specification:

- for Homag and IMA machines,
- safety ring HSK25R guarantees minimum radial runout and precise balancing of the tools for optimal cutting quality,
- blade with shear angle,
- N_{max} = 18 000 r.p.m.

PCV DIA

Catalogue number	Type	D mm	R_1 mm	R_2 mm	R_3 mm		z	
FPD550.0010	FPD-550	81,1	1,5	2,0	3,0	HSK25	4	+
FPD550.0020	FPD-550	81,1	1,5	2,0	3,0	HSK25	6	+
FPD550.0110	FPD-550	81,1	3,0	2,0		HSK25	4	+
FPD550.0120	FPD-550	81,1	3,0	2,0		HSK25	6	+

GFD-011

Inserted hogger type **GFD-011** with radial tooth shape, irregular pitch, new cutting geometry and negative hook angle guarantees highest edge quality.

Material: chipboard and MDF – raw or covered with laminate, foil and paper as well as low-density furniture board (not suitable for veneered board)

Specification:

- for Homag, IMA and IDM machines,
- high cutting quality thanks to precise positioning,
- increased life,
- concurrent working system cutter head / cutter head,
- tip height 6 mm,
- N_{max} = 9 000 r.p.m.

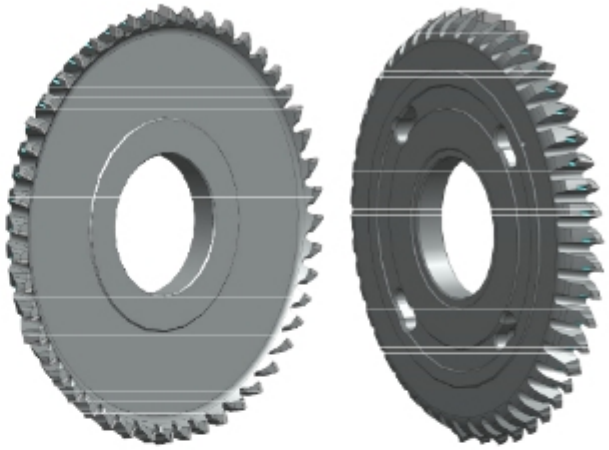

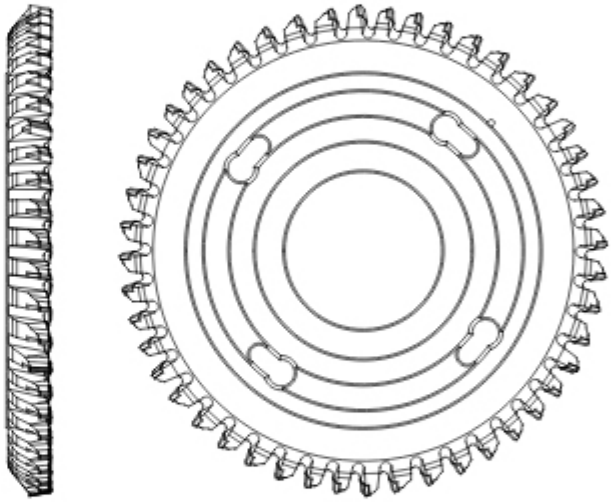





Catalogue number	Type	D mm	B mm	b mm	d mm	z	DIA mm	n_{max}		
GFD011.0040	GFD-011	250	23	11	80	48 (42+6)	6	9000	P	•
GFD011.0040L	GFD-011	250	23	11	80	48 (42+6)	6	9000	L	•
GFD011.0041	GFD-011	250	23	11	60	48 (42+6)	6	9000	P	•
GFD011.0041L	GFD-011	250	23	11	60	48 (42+6)	6	9000	L	•
GFD011.0030	GFD-011	250	23	11	80	36 (30+6)	6	9000	P	•
GFD011.0030L	GFD-011	250	23	11	80	36 (30+6)	6	9000	L	•
GFD011.0031	GFD-011	250	23	11	60	36 (30+6)	6	9000	P	•
GFD011.0031L	GFD-011	250	23	11	60	36 (30+6)	6	9000	L	•

GFD-02

Inserted hogger type **GFD-02** designed for drawer band production.

Specification:

- shear angle increases tool life and reduces noise,
- sharpening zone 4,5 mm,
- N_{max} = 9 000 r.p.m.



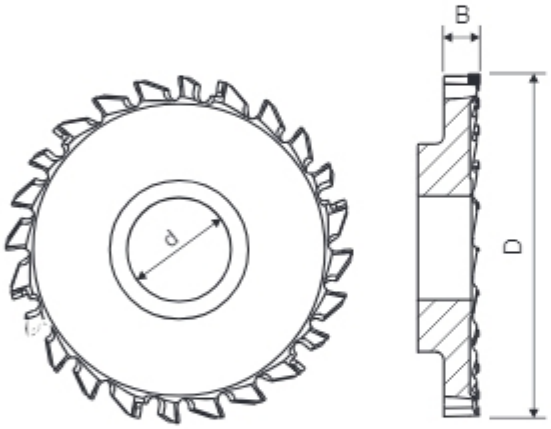



MDF HDF DIA

Type	D mm	B mm	d mm	z	n_{max}	
GFD-02	200	20	60	24+6+6	9000	+
GFD-02	200	22	80	24+6+6	9000	+
GFD-02	250	20	60	32+8+8	9000	+
GFD-02	250	22	80	32+6+6	9000	+
GFD-02	260	20	60	36+9+9	9000	+
GFD-02	280	20	60	40+10+10	9000	+

GFD-05

Inserted hogger FINISH-LINE type **GFD-05**.

Type of work: formatting.

Material: chipboard, MDF, HDF.

Specification:

- for Homag, IMA and IDM machines,
- very aggressive blade geometry guarantees highest quality cutting,
- concurrent working system cutter head / cutter head,
- scorer / cutter head working system,
- sharpening zone 4,5 mm,
- shear angle guarantees quiet and stable work,
- N_{max} = 6 000 r.p.m.

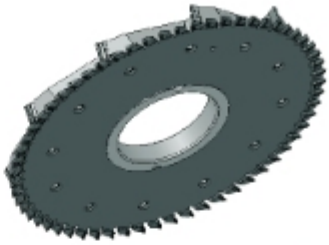

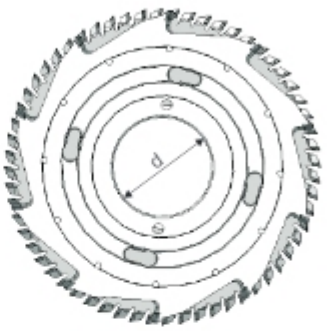

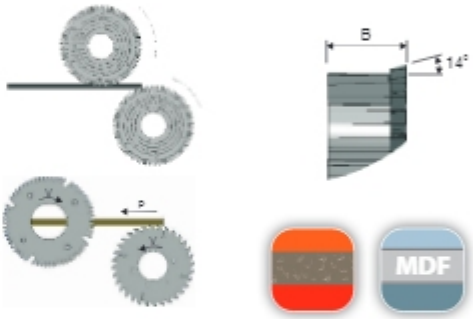

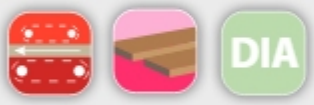

Catalogue number	Type	D mm	B mm	d mm	z		
GFD05.007	GFD-05	200	22	35	24+4	R	+
GFD05.007L	GFD-05	200	22	35	24+4	L	+
GFD05.003P	GFD-05	250	18	80	56+6x4	R	+
GFD05.009	GFD-05	250	20	35	36+6	R	+
GFD05.009L	GFD-05	250	20	35	36+6	L	+
GFD05.003	GFD-05	250	20	80	56+6x4	R	+
GFD05.003L	GFD-05	250	20	80	56+6x4	L	+
GFD05.011	GFD-05	255	19	80	60+10	R	+
GFD05.011L	GFD-05	255	19	80	60+10	L	+
GFD05.015	GFD-05	255	19	80	60+10	R (GT)	+
GFD05.015L	GFD-05	255	19	80	60+10	R (GW)	+
GFD05.006	GFD-05	255	19	80	66+10	R	+
GFD.006L	GFD-05	255	19	80	66+10	L	+
GFD05.0070	GFD-05	255	32,33	60	48+4	R	+
GFD05.0070L	GFD-05	255	32,33	60	48+4	L	+
	GFD-05	250	14,5	60	48		+
	GFD-05	250	14,5	80	48		+
	GFD-05	250	14,5	60	54		+
	GFD-05	250	14,5	80	54		+
	GFD-05	250	14,5	60	60		+
	GFD-05	250	14,5	80	60		+

GFD-09



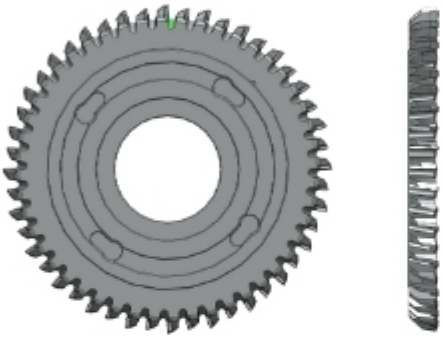

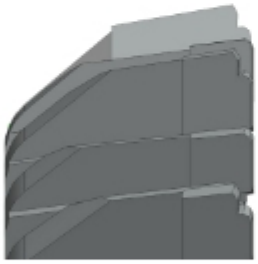

Inserted hogger type **GFD-09**

Type of work: formatting

Material: chipboard, MDF, HDF

Specification:

- for Homag, IMA and IDM machines
- long life thanks to special blade construction
- optimal tooth shape allows for soft formatting before final finishing
- high cutting quality thanks to precise positioning
- minimum machine retooling time thanks to increased life
- maximum thickness of the formatted element 60 mm
- concurrent working system cutter head / cutter head
- scorer / cutter head working system
- shear angle increases tool life
- sharpening zone 4,5 mm
- N_{max} = 6 000 r.p.m.









Catalogue number	Type	D mm	B mm	d mm	z	z		
GFD009.0500	GFD-09	250	10,5	60	36	6000	R	+
GFD009.0500L	GFD-09	250	10,5	60	36	6000	L	+
GFD009.0510	GFD-09	250	10,5	60	48	6000	R	+
GFD009.0510L	GFD-09	250	10,5	60	48	6000	L	+
GFD009.0520	GFD-09	250	10,5	60	60	6000	R	+
GFD009.0520L	GFD-09	250	10,5	60	60	6000	L	+
GFD009.0530	GFD-09	250	10,5	80	36	6000	R	+
GFD009.0530L	GFD-09	250	10,5	80	36	6000	L	+
GFD009.0540	GFD-09	250	10,5	80	48	6000	R	+
GFD009.0540L	GFD-09	250	10,5	80	48	6000	L	+
GFD009.0550	GFD-09	250	10,5	80	60	6000	R	+
GFD009.0550L	GFD-09	250	10,5	80	60	6000	L	+

GFD-008

Inserted hogger type **GFD-08** with trapezoidal tooth shape.

Type of work: formatting, cross and longitudinal cutting.

Material: chipboard, MDF, HDF.

Specification:

- for Homag, IMA and IDM machines,
- special construction allows for very soft formatting of long elements with high excess material,
- high cutting quality thanks to precise positioning,
- minimum machine retooling time thanks to increased life,
- maximum thickness of formatted element 50 mm,
- concurrent working system cutter head / cutter head,
- scorer / cutter head working system,
- shear angle increases tool life,
- sharpening zone 4,5 mm,
- N_{max} = 6 000 r.p.m.



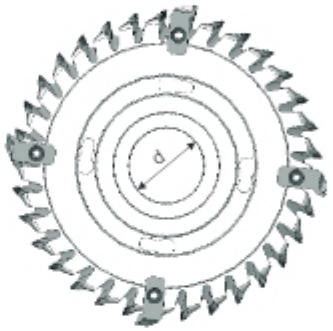

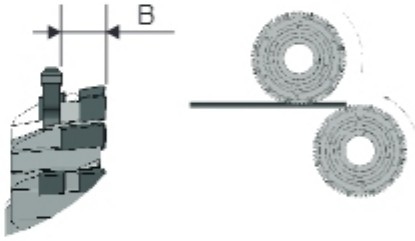

DIA MDF HDF

Type	D mm	B mm	d mm	z	
GFD-008	250	10	60	33+11	+
GFD-008	250	10	80	33+11	+
GFD-008	250	10	60	48+12	+
GFD-008	250	10	80	48+12	+
GFD-008	250	10	60	36+6	+
GFD-008	250	10	80	36+6	+

UGF-01

Fast mounting system type **UGF-01** designed for machines with hydraulic clamping.

Orders for cutter heads and brazed cutters equipped with this system should look as follows: GFD-03 + UGF-01.



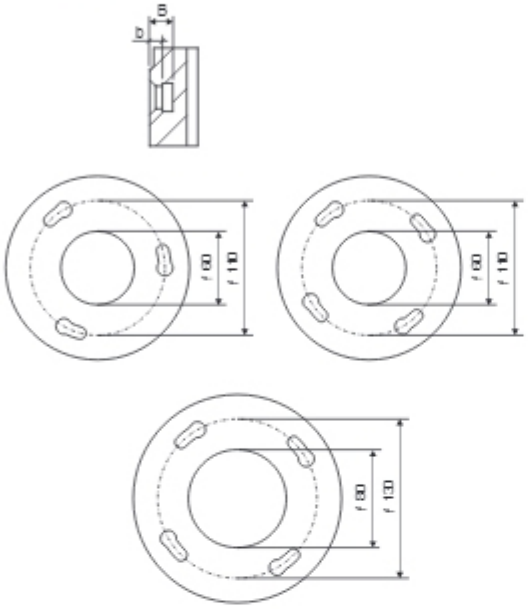

Type	D mm	d mm	N	
UGF-01	110	60	3	+
UGF-01	110	60	4	+
UGF-01	130	80	4	+

PD-403

Scoring saw blade with polycrystalline diamond (PCD) with straight teeth (GM) type **PD-403**, designed for cutting homogenous materials without impurities, used on automatic lines with pneumatic clamping systems.

Type of cut: cross and longitudinal.

Material: laminated chipboard, MDF, HDF.



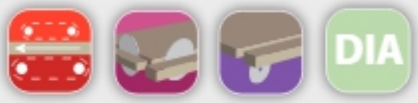



Type	D mm	B mm	d mm	z		
PD-403	180	3,2	50	36	GM	+
PD-403	180	3,2	50	48	GM	+
PD-403	200	3,2	50	36	GM	+
PD-403	200	3,2	50	48	GM	+
PD-403	200	3,2	50	60	GM	+

PD-404

Scoring and formatting saw blade with straight (GM) or top bevel (GW or GT) teeth type **PD-404**, with polycrystalline diamond (PCD) tips designed for cutting homogenous materials without impurities, used on automatic lines, mounted on sleeves.

Type of cut: cross and longitudinal.

Material: laminated chipboard, MDF, HDF.







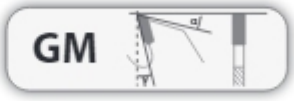





Type	D mm	B mm	b mm	d mm	z	nxd$_1$	D$_1$	
PD-404	180	3,2	2,2	65	32	6x6,5	90	+
PD-404	180	3,2	2,2	65	48	6x6,5	90	+
PD-404	180	4,0	2,2	65	32	6x6,5	90	+
PD-404	180	4,0	2,2	65	48	6x6,5	90	+
PD-404	200	3,2	2,2	80	32	4x6,5	140	+
PD-404	200	3,2	2,2	80	48	4x6,5	140	+
PD-404	200	4,0	3,0	80	32	4x6,5	140	+
PD-404	200	4,0	3,0	80	48	4x6,5	140	+

PD-405



Set of scoring saw blades type **PD-405** with adjustable width, polycrystalline diamond (PCD) tips and straight teeth - GM.

Type of cut: scoring.

Material: laminated chipboard, laminates, MDF, HDF.

Width is regulated with the following spacers:

- 0,05 mm - 1 pc.
- 0,1 mm - 1 pc.
- 0,2 mm - 2 pcs.
- 0,3 mm - 1 pc.

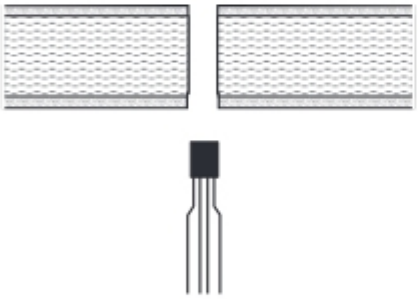

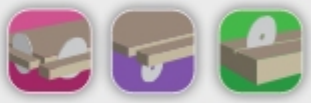





Catalogue number	Type	D mm	B mm	d mm	z		DIA mm	
D4050008	PD-405	100	2,8÷3,6	20	2x10	GM	4,9	+
D4050010	PD-405	120	2,8÷3,6	20	2x10	GM	4,9	+
D4050019	PD-405	120	2,8÷3,6	22	2x10	GM	4,9	+
D4050004	PD-405	125	2,8÷3,6	20	2x10	GM	4,9	+
D4050021	PD-405	125	2,8÷3,6	22	2x10	GM	4,9	+
D4050013	PD-405	125	2,8÷3,6	20	2x12	GM	4,9	+
D4050013.4	PD-405	125	2,8÷3,6	20	2x12	GM	4,0	•
D4050012	PD-405	125	2,8÷3,6	22	2x12	GM	4,9	+
D4050012.4	PD-405	125	2,8÷3,6	22	2x12	GM	4,0	•

PD-406

Scoring saw blades width straight (GM) or top bevel (GW or GT) teeth, type **PD-406** with polycrystalline diamond (PCD) tips designed for formatting.

Type of cut: cross and longitudinal.

Material: laminated chipboard, laminates, MDF, HDF.



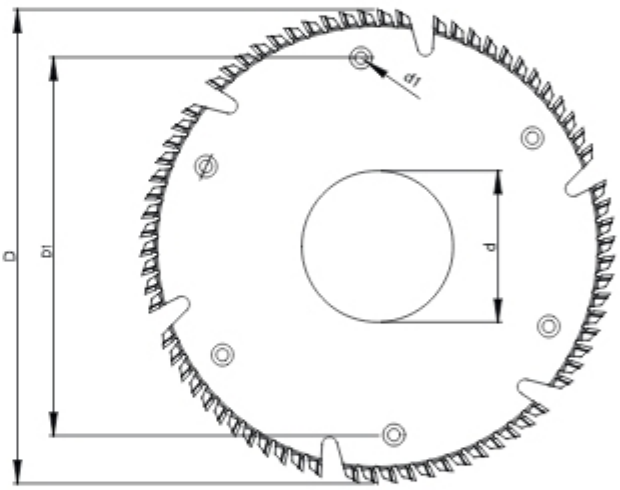











Type	D mm	B mm	b mm	d mm	z	nxd$_1$	D$_1$	
PD-406	250	4,0	3,0	80	48	6x6,5	200	+
PD-406	250	4,0	3,0	80	54	6x6,5	200	+
PD-406	250	4,0	3,0	80	72	6x6,5	200	+
PD-406	250	4,0	3,0	100	48	6x6,5	200	+
PD-406	250	4,0	3,0	100	54	6x6,5	200	+
PD-406	250	4,0	3,0	100	72	6x6,5	200	+

PD-408

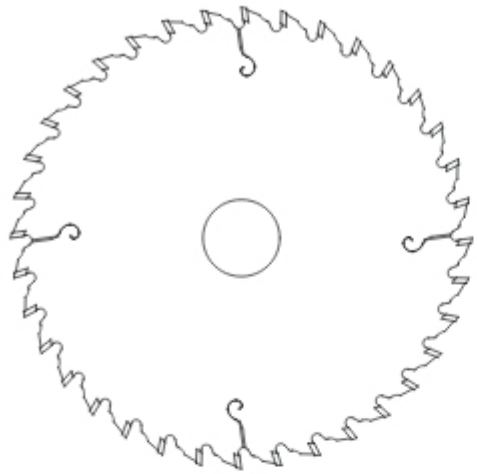

Scoring saw blade type **PD-408** with conical-flat and conical-alternate bevel (GR/GM, GR/GS) teeth, with polycrystalline diamond (PCD) tips designed for scoring chipboard, laminated board, MDF, HDF and other homogenous materials, used on manual formatting machines and automatic lines.

Type of cut: scoring.

Material: laminated chipboard, MDF, HDF.





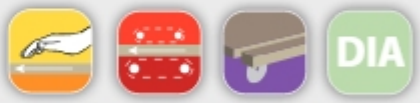

Catalogue number	Type	D mm	B_1/B_2 mm	b mm	d mm	z		DIA mm	
D4080082	PD-408	100	3,2/4,3	2,5	20	20	GR/GM	4,9	+
D4080822	PD-408	125	2,8/3,6	2,2	20	24	GR/GM	4,0	•
D4080088	PD-408	125	2,8/3,6	2,2	20	24	GR/GM	4,9	+
D4080085	PD-408	125	2,8/3,6	2,2	22	24	GR/GM	4,9	+
D4080697	PD-408	125	3,1/4,2	2,5	20	24	GR/GM	4,0	•
D4080726	PD-408	125	3,1/4,2	2,5	22	24	GR/GM	4,0	+
D4080079	PD-408	125	3,2/4,3	2,5	20	24	GR/GM	4,9	+
D4080023	PD-408	125	3,2/4,3	2,5	22	24	GR/GM	4,9	+
D4080304	PD-408	150	4,4/5,4	3,0	30	24	GR/GM	4,9	+
D4080301	PD-408	150	4,4/5,4	3,0	30	36	GR/GM	4,9	+
D4080823	PD-408	180	4,4/5,4	3,2	45	36	GR/GM	4,0	+
D4080083	PD-408	180	4,4/5,6	3,4	45	36	GR/GM	4,9	•
D4080089	PD-408	200	4,4/5,4	3,0	30	36	GR/GM	4,9	+
D4080053A	PD-408	200	4,4/5,4	3,0	45	36	GR/GM	4,9	+

PD-409

Scoring saw blade type **PD-409** with polycrystalline diamond (PCD) tips designed for scoring laminated materials before profiling. Used mainly on HOMAG machines.

Type of cut: laminate scoring.

Material: chipboard, MDF, HDF.

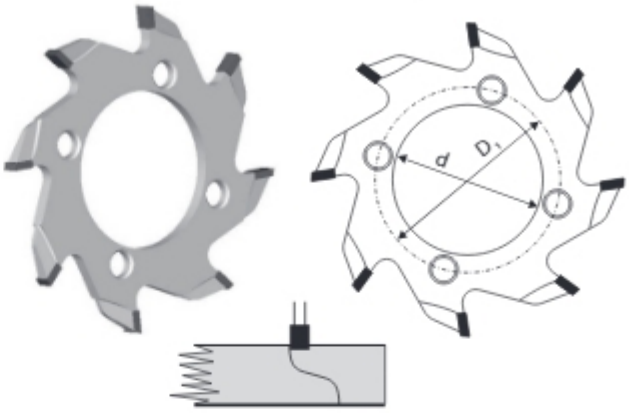

DIA

GM

MDF HDF

Type	D mm	B mm	b mm	d mm	z	nxd1	D1	
PD-409	70	4,0	3,0	34	8	4x5,5	42	+

PD-502

Scoring saw blade type **PD-502** with polycrystalline diamond (PCD) tips designed for multi-rip machines.

Type of cut: multi-rip scoring.

Material: chipboard, plywood, MDF, HDF.

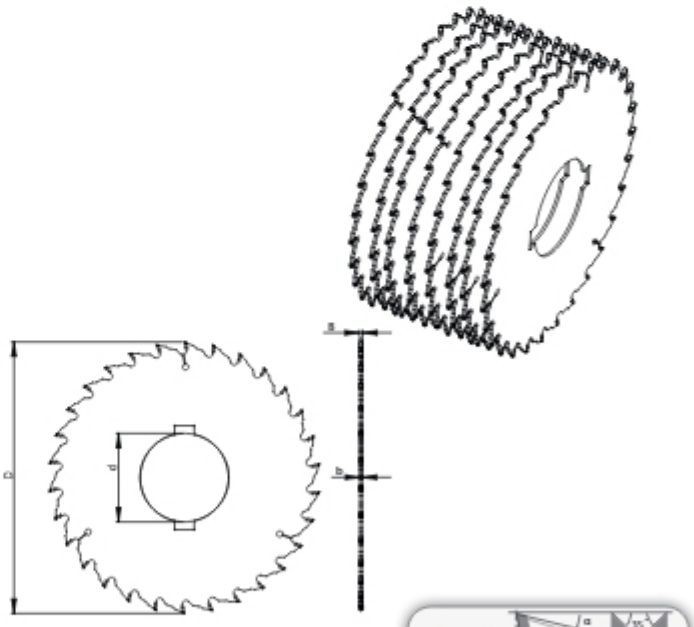

DIA

GS

MDF HDF

Type	D mm	B mm	b mm	d mm	z		
PD-502	210	2,4	1,8	75	30	GR/GM	+
PD-502	230	2,8	2,2	75	30	GR/GM	+
PD-502	250	3,2	2,2	75	24	GR/GM	+

PD-505



Universal saw blade with medium number of alternate top bevel teeth (GS), type **PD-505**, with polycrystalline diamond (PCD) tips designed for cross and longitudinal cutting of glued wood, plywood, chipboard, used on manual formatting machines and automatic lines.

Type of cut: single, cross and longitudinal.

Material: glued wood, plywood, MDF chipboard, laminated chipboard.

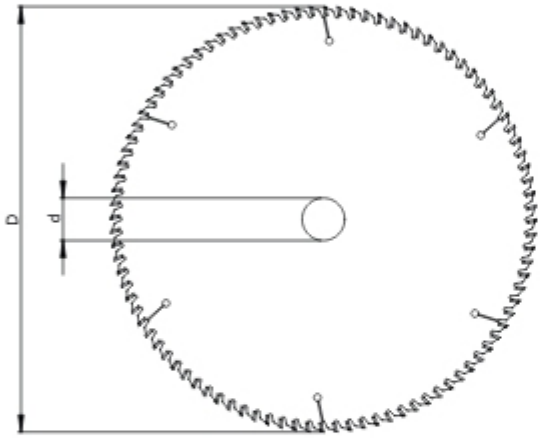







Type	D mm	B mm	b mm	d mm	z		
PD-505	250	3,2	2,3	30	60	GS	+
PD-505	250	3,2	2,3	30	80	GS	+
PD-505	300	3,2	2,5	30	60	GS	+
PD-505	300	3,2	2,5	30	72	GS	+
PD-505	300	3,2	2,5	30	96	GS	+
PD-505	350	3,5	2,5	30	60	GS	+
PD-505	350	3,5	2,5	30	72	GS	+
PD-505	350	3,5	2,5	30	96	GS	+
PD-505	350	4,0	3,0	30	60	GS	+
PD-505	350	4,0	3,0	30	72	GS	+
PD-505	350	4,0	3,0	30	96	GS	+

PD-506

Saw blade, type **PD-506** with polycrystalline diamond (PCD) tips designed for cutting chipboard, laminated board, MDF, HDF and other homogenous materials without impurities, used on manual formatting machines and automatic lines.

Type of cut: single, cross and longitudinal.

Material: laminated chipboard, MDF, HDF.



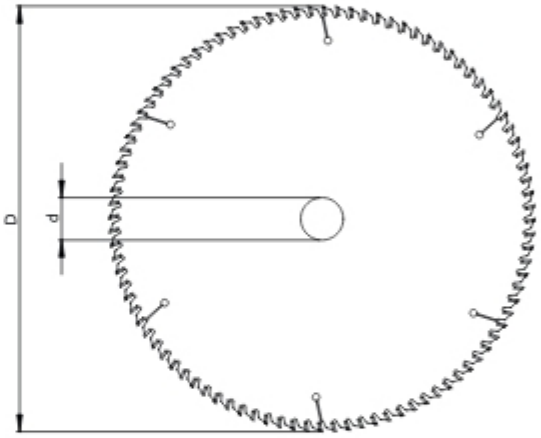

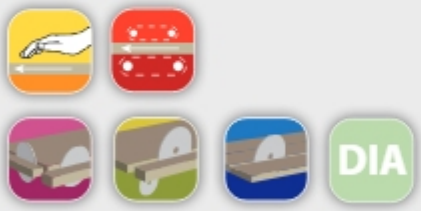



Type	D mm	B mm	b mm	d mm	z		
PD-506	250	3,2	2,3	30	60	GA	+
PD-506	250	3,2	2,3	30	80	GA	+
PD-506	300	3,2	2,4	30	60	GA	+
PD-506	300	3,2	2,4	30	72	GA	+
PD-506	300	3,2	2,4	30	96	GA	+
PD-506	350	3,5	2,5	30	60	GA	+
PD-506	350	3,5	2,5	30	72	GA	+
PD-506	350	3,5	2,5	30	96	GA	+
PD-506	350	4,0	3,0	30	60	GA	+
PD-506	350	4,0	3,0	30	72	GA	+
PD-506	350	4,0	3,0	30	96	GA	+

PD-521

Saw blade, type **PD-521** with polycrystalline diamond (PCD) tips and triple chip + flat teeth (GA) designed for cutting in stack chipboard, laminated board, MDF, HDF and other homogenous materials without impurities, used on manual formatting machines and automatic lines.

Type of cut: in stack, cross and longitudinal.

Material: chipboard, laminated chipboard, MDF, HDF.



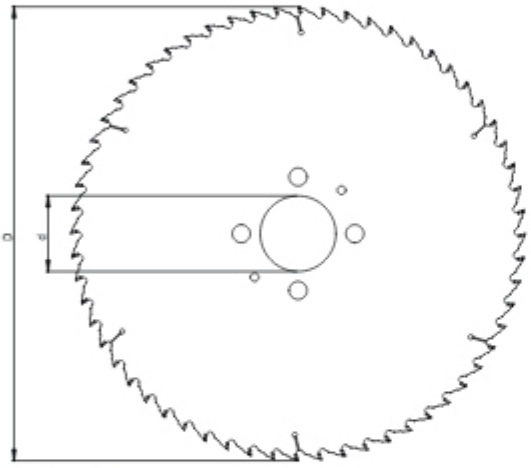







Type	D mm	B mm	b mm	d mm	z		
PD-521	300	4,4	3,0	30/60/75/80	60	GA	+
PD-521	300	4,4	3,0	30/60/75/80	72	GA	+
PD-521	350	4,4	3,2	30/60/75/80	60	GA	+
PD-521	350	4,4	3,2	30/60/75/80	72	GA	+
PD-521	380	4,4	3,2	30/60/75/80	60	GA	+
PD-521	380	4,4	3,2	30/60/75/80	72	GA	+
PD-521	400	4,4	3,2	30/60/75/80	60	GA	+
PD-521	400	4,4	3,2	30/60/75/80	72	GA	+
PD-521	450	4,4	3,2	30/60/75/80	60	GA	+
PD-521	450	4,4	3,2	30/60/75/80	72	GA	+
PD-521	480	4,6	3,6	30/60/75/80	60	GA	+
PD-521	480	4,6	3,6	30/60/75/80	72	GA	+
PD-521	480	4,8	3,6	30/60/75/80	60	GA	+
PD-521	480	4,8	3,6	30/60/75/80	72	GA	+